COOLING BY MINICHANNEL HEAT EXCHANGER

MEDSI June 10-13, 2008
Saskatoon, Saskatchewan, Canada

J.P. Daguerre, J. Da Silva Castro, J-M. Dubuisson, C. Soulaine*, A. Elhabchi

Synchrotron SOLEIL , * U. Bordeaux

In Synchrotron facilities, heat dissipating devices have to be more sophisticated. If we consider the high power level reached by the beam and/or the high requirement level of users specifications, cooling systems have to be improved. Therefore, SOLEIL generalized mini channel heat exchangers. Moreover we developed a mini channel geometry optimisation tool, in order to make conception easier.

Mini channel advantages:

-High capacity of heat dissipation

-Heat exchangers size reduced

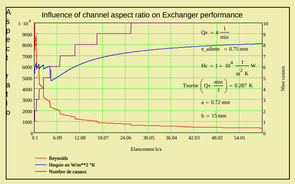

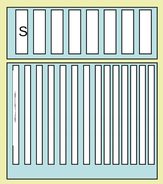

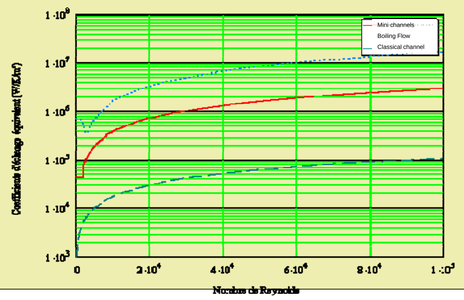

Mini channel drawback:

-Recent Theory not often mastered

-Validation experiments are indispensable with new mini channel shape

Design by L. Pouquet

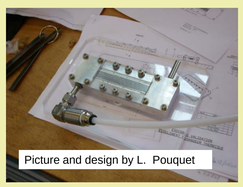
Picture and design by L. Pouquet

SOLEIL perspective and development:

-Heat exchanger Numerical optimisation based on Kandlikar's model.

-Experiments of heat exchangers with Two-phase Flows.

-Experimental investigation of new shape mini channel

“DiagOn” application

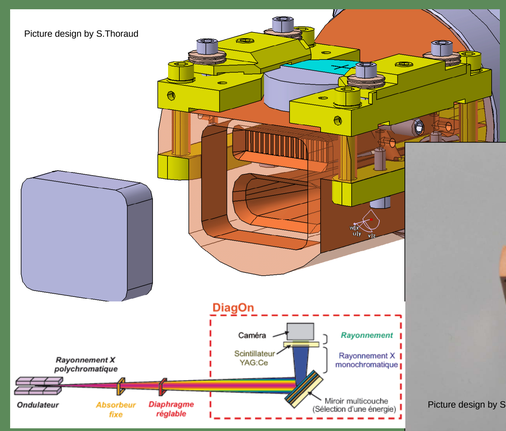

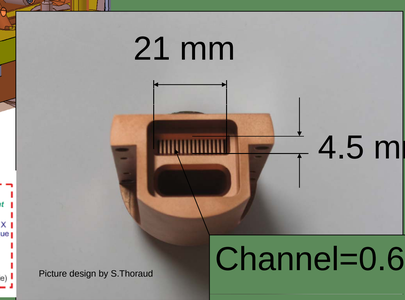

Channel=0.6mm X 39.37 mm

Fin=0.7 mm X 39.37 mm

P=404 W

$$\Delta P = 1.6\, bar$$

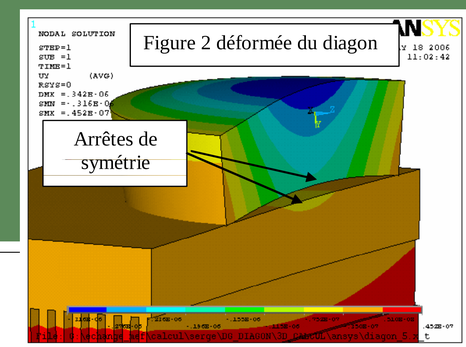

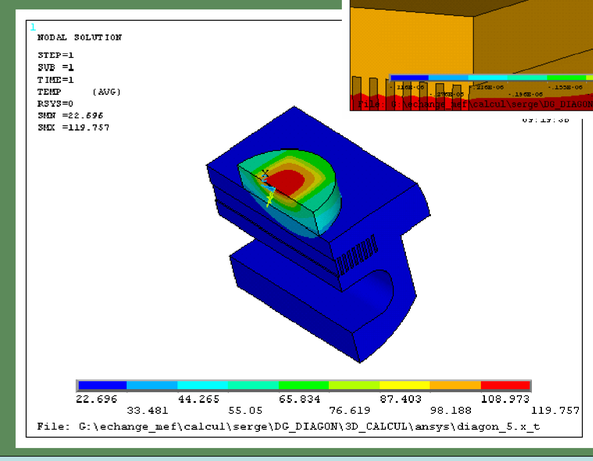

DiagOn cooling down

$$Q = 8 L.mn^{-1}\,;\, Heq = 30000\, W.m^{-2}K^{-1};$$

$$^{1}Hcontact\ (\mathrm{Si/\ Ga\ In\ Sn\ /Cu}) = 1.41 \quad 10^{5}\ \mathrm{W.m^{-2}.K^{-1}}$$

[1] physics magazin :" Thermal boundary resistance of mechanical contacts between solids at sub-ambient temperatures"

Input power by Kelvin $P = H * S = 29\, W.K^{-1}$

“Front-Ends” application

Previous version

Current cooling down of Front-Ends, P=1.2kW

$$\Phi = 6\, mm\,;\, Q = 10 L.mn^{-1}\,;\, H = 19000\, W.m^{-2}.K^{-1}$$

Input power by Kelvin $P = H * S = 342\, W.K^{-1}$

New version

P=16 kW

ΔP = 6 bar

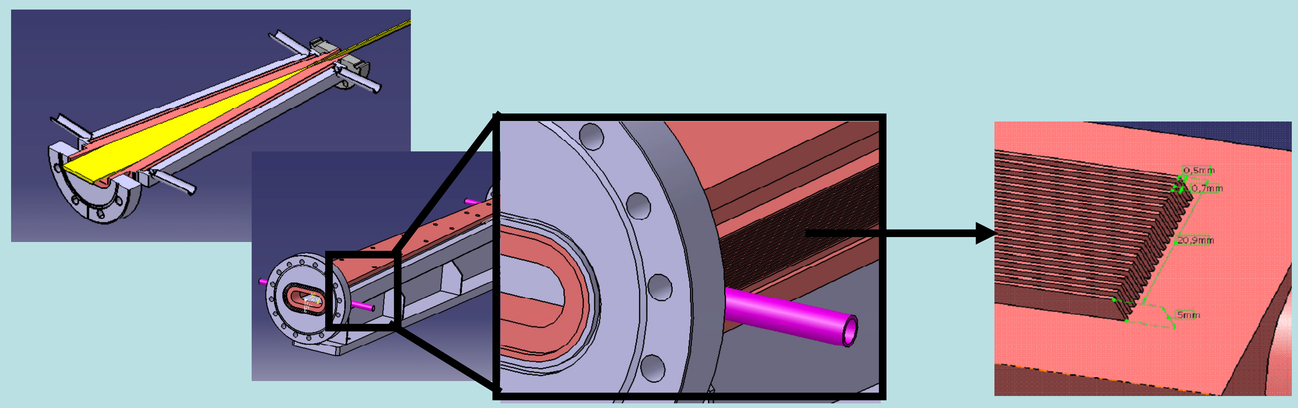

Mini channel cooling down

$$Q = 30 L.mn^{-1}\,;\, Heq = 69000\, W.m^{-2}.K^{-1}$$

Input power by Kelvin $P = H * S = 1.842\, kW.K^{-1}$

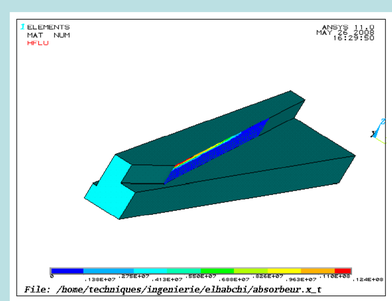

Heat flux

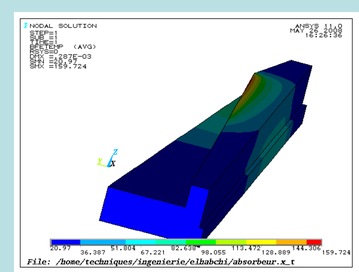

Temperature