Brazilian Synchrotron Light Laboratory - LNLS

PO box 6192, 13.084-971, Campinas, Brazil

HIGH-PRECISION SLITS BASED ON A MONOLITHIC FLEXIBLE MECHANISM

F. Rodrigues, R. Neuenschwander – email: flavior@lnls.br

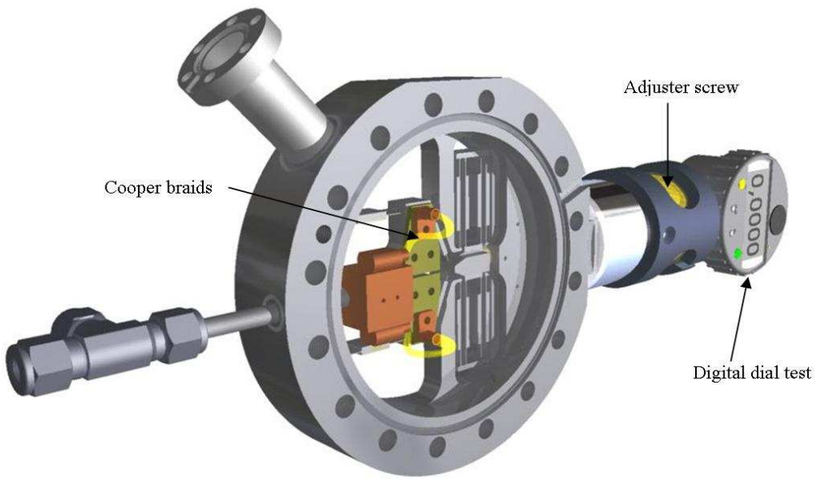

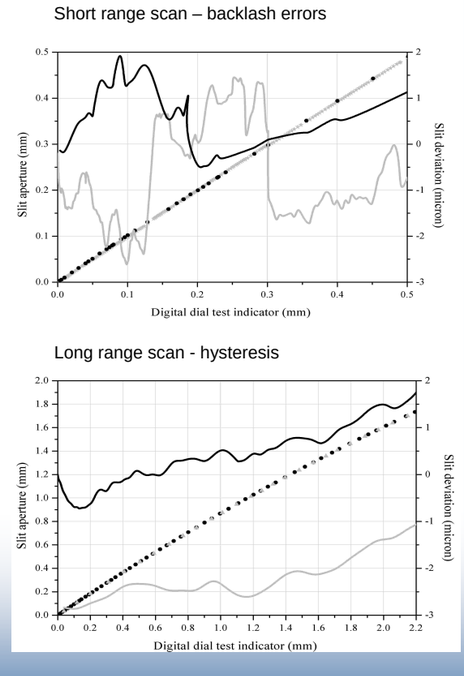

Cooled high precision compact slit
Double face CF100 flange
Maximum slit aperture 2.4milimeter
Accuracy and repeatability ±3micron

GRAPHITE FILTER FOR WIGGLER BEAMLINES AT LNLS

F. Rodrigues, R. Neuenschwander, B. Meyer – email: flavior@lnls.br

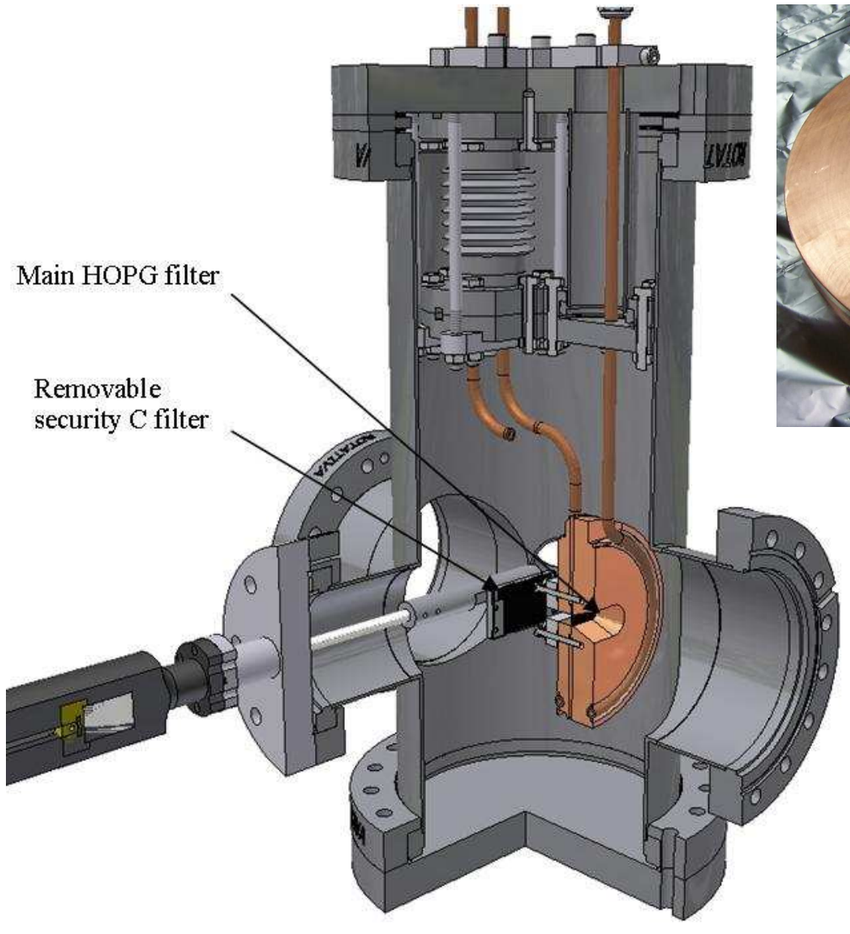

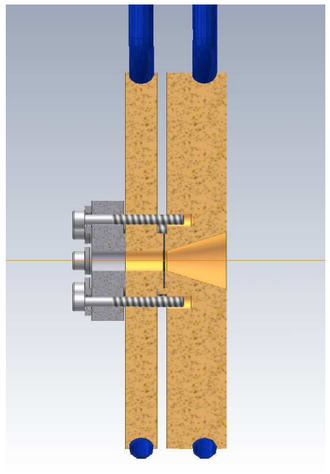

HOPG filter 250micron
450W absorbed (6x35mm²)
Max incident power density 3.5 W/mm²
Security system – second carbon foil