ALBA Storage Ring Girder system

Lluis Miralles i Verge
Engineering Division Head
CELLS

OUTLINE

- Design
- Prototyping
- Production

Design

Lattice

Energy	GeV	3.0
Nominal current	mA	250
Design current	mA	400
Horizontal Emittance	nm.rad	4.3
Lattice		Expanded DBA
Storage ring Circumference	m	268.8
No. of dipoles		32
Bending angle	mrad	196.34
Radius of curvature	m	7.047042
Dipole magnetic field	T	1.42
Critical energy from dipole	keV	8.5
Total photon flux at the design current	Ph/sec	$9.7 \cdot 10^{20}$
Total power at the design current	kW	407
Harmonic number		448
Frequency	MHz	500
Momentum Compaction Factor		$8.8 \cdot 10^{-4}$
Chromaticity (Horizontal/Vertical)		-39.8/-25.6

Unit Cell

Matching Cell

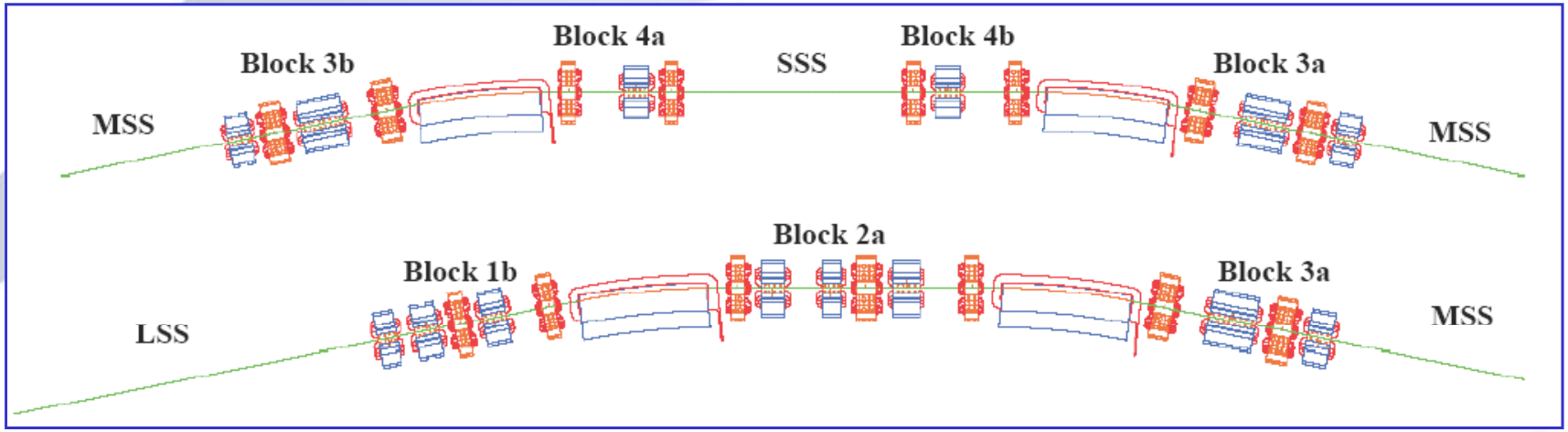

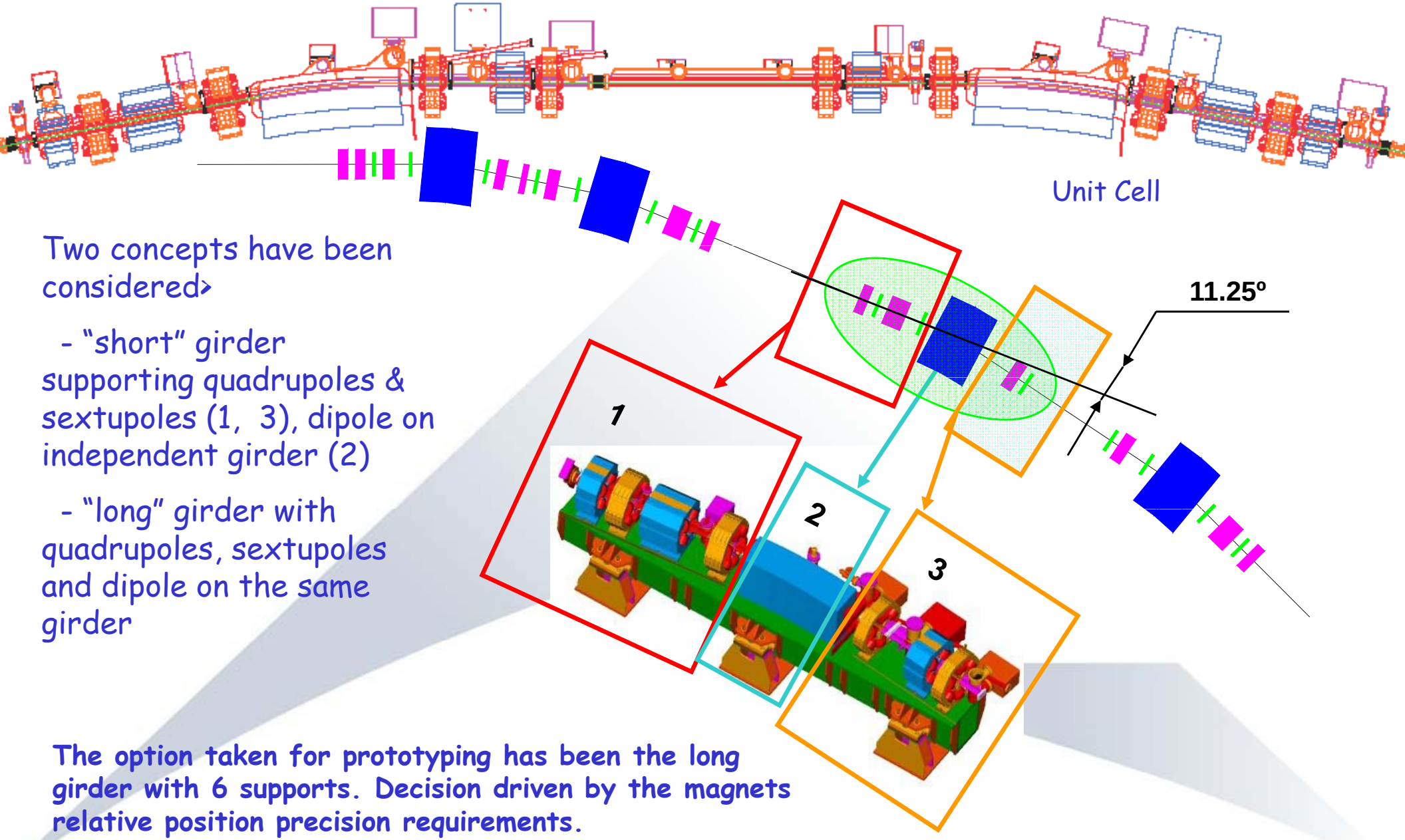

Two concepts have been considered›

- "short" girder supporting quadrupoles & sextupoles (1, 3), dipole on independent girder (2)

- "long" girder with quadrupoles, sextupoles and dipole on the same girder

The option taken for prototyping has been the long girder with 6 supports. Decision driven by the magnets relative position precision requirements.

Types of girders

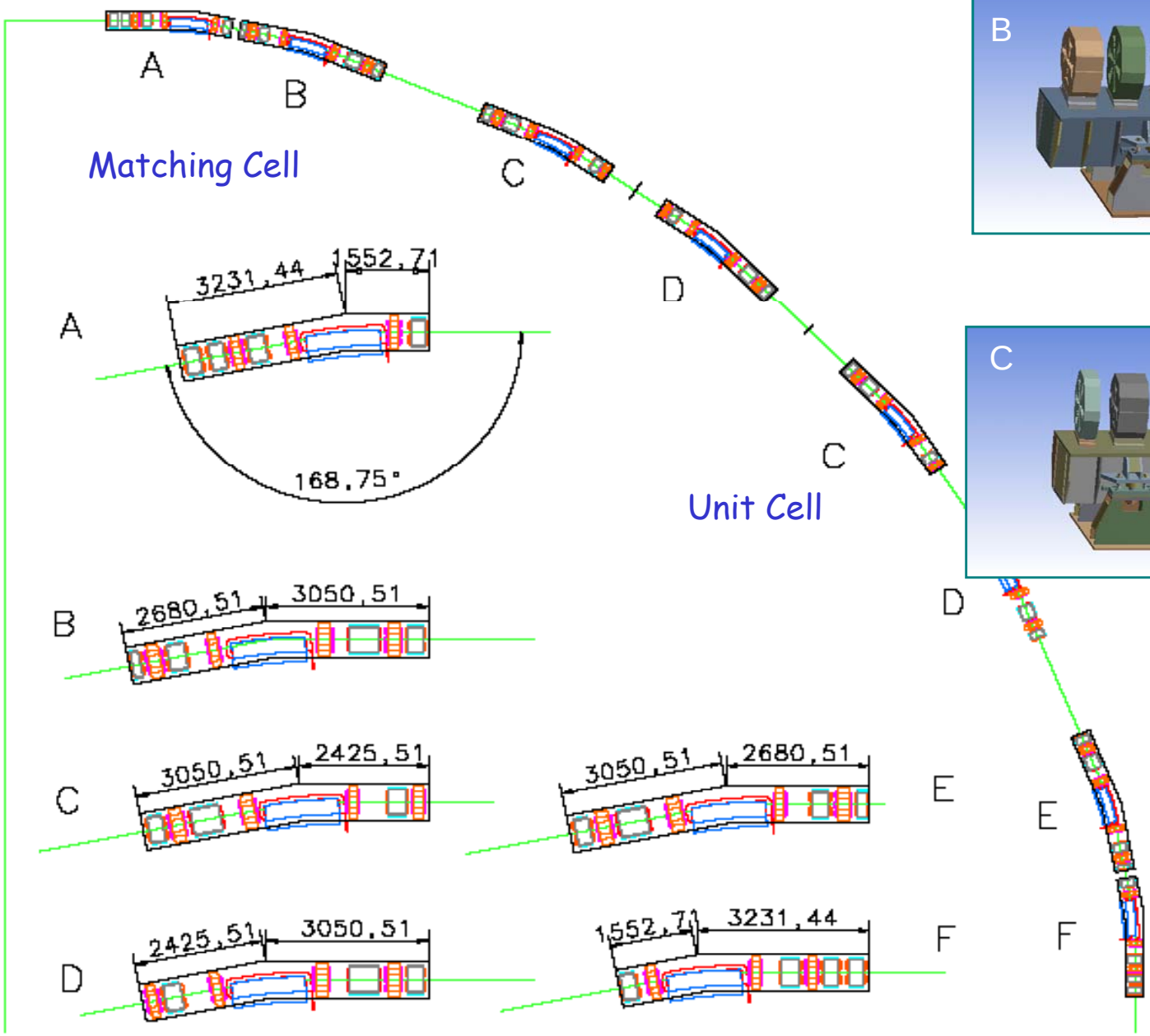

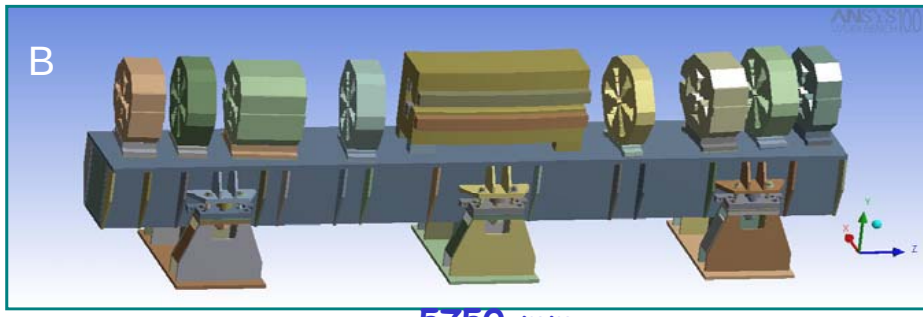

5750 mm

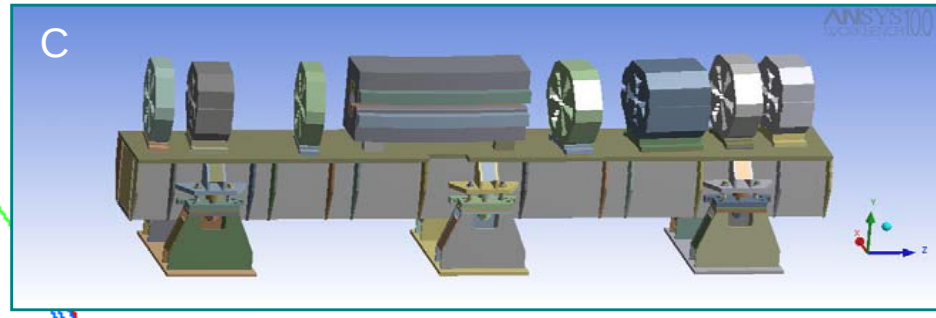

5460 mm

B and E are symmetrical

C and D are symmetrical

A and F are symmetrical

Design steps:

-Simulation parameters understanding thought real case study. MAX II girder system. Simulation and measurements.

- Different alternatives for the solution configuration:

  - Low supports configuration.

  - 4 supports configuration.

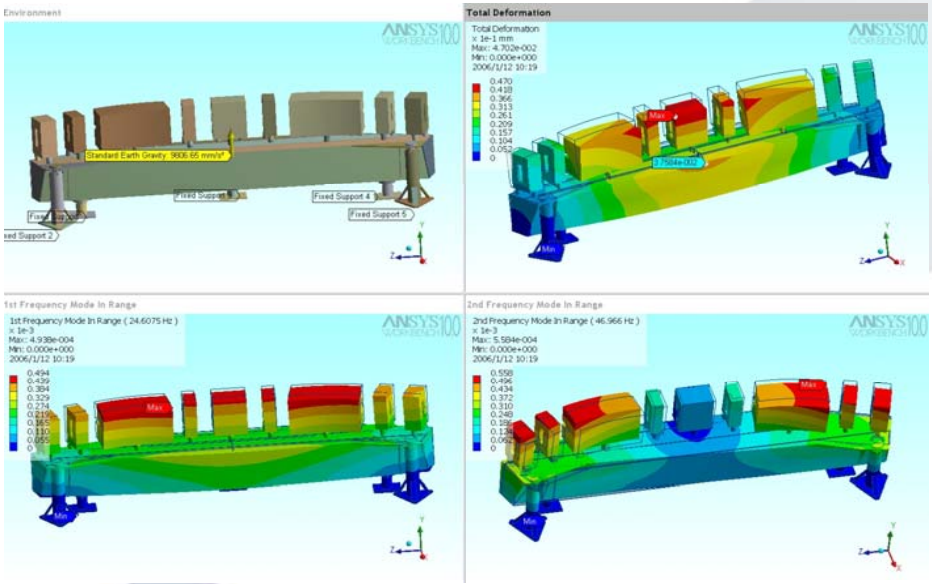

ALBA girder study with 6 high supports position

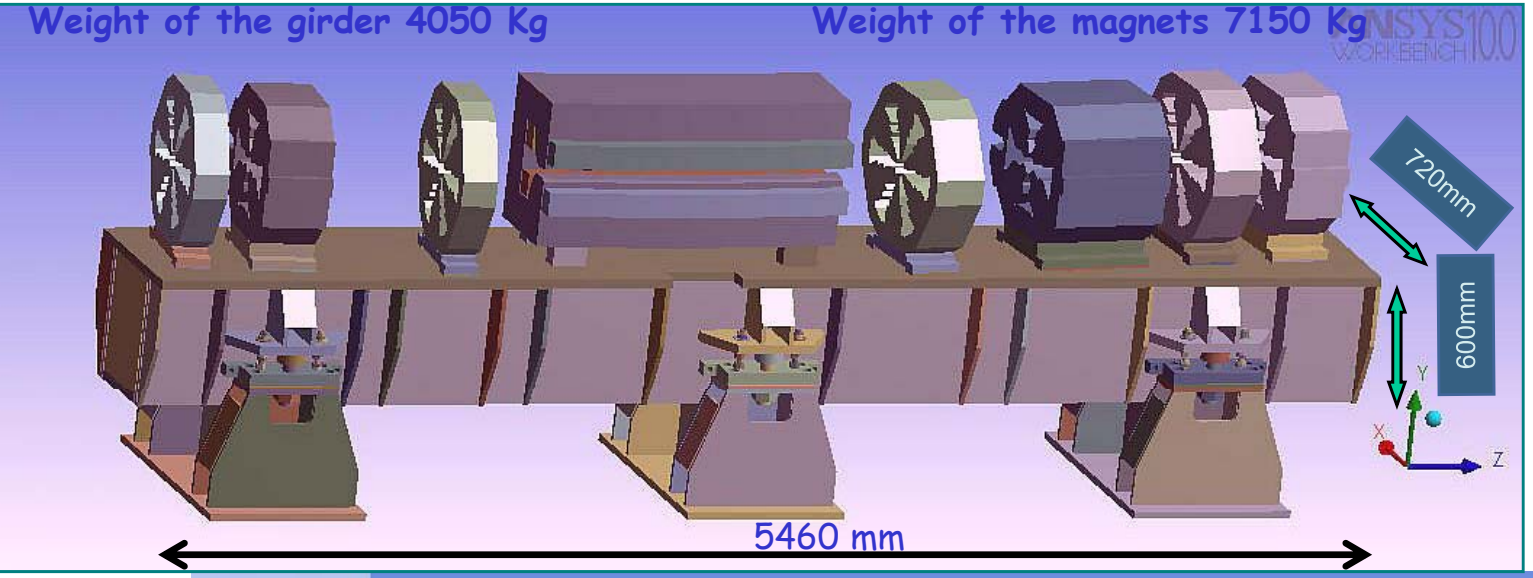

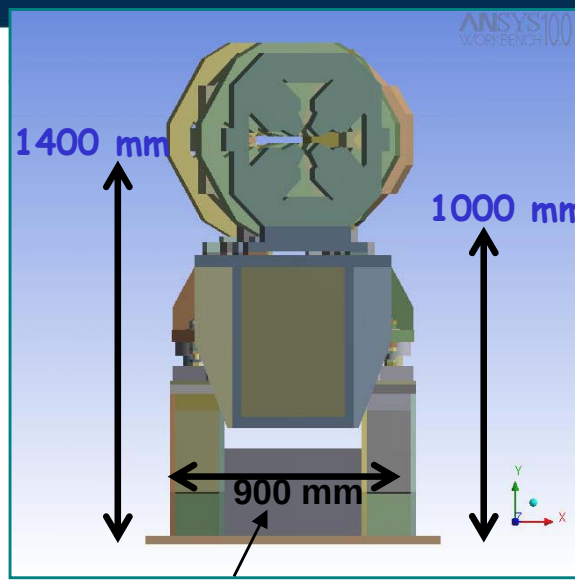

Critical dimension because of space limit

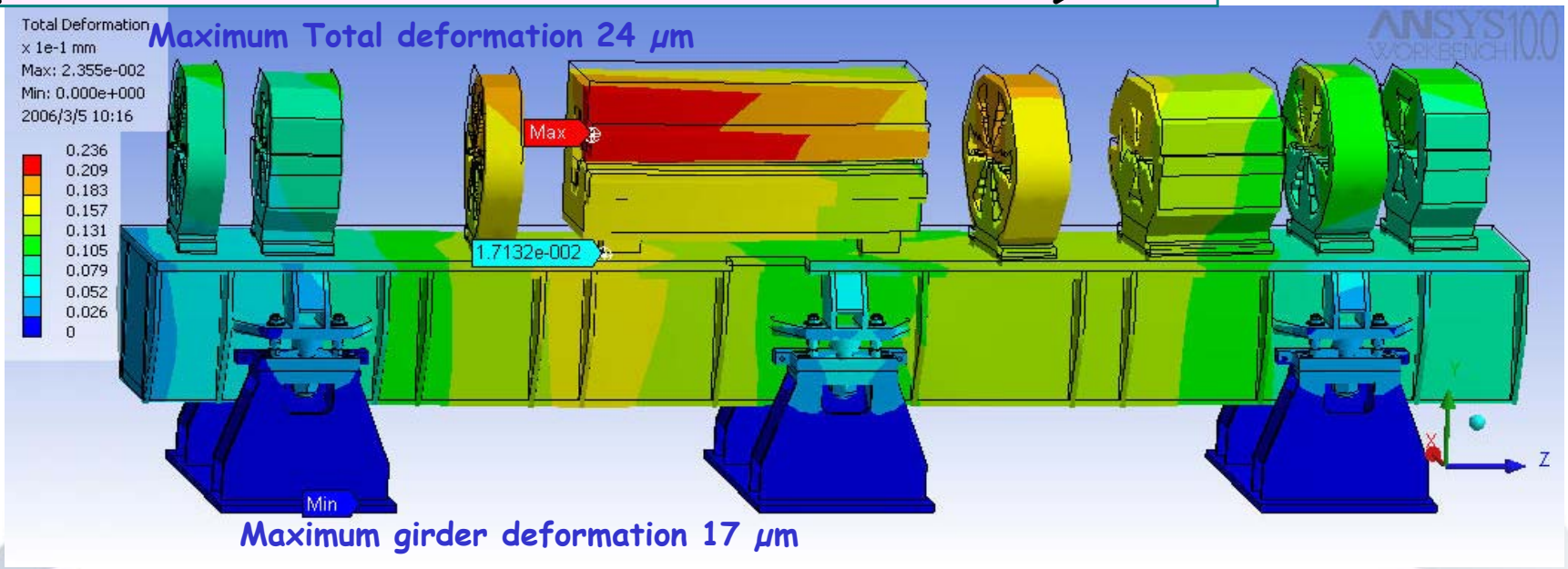

Maximum deformation for 6 supports is 24 μm. Maximum deformation for 3 supports is roughly 50 μm.

Frequencies and modes of vibration

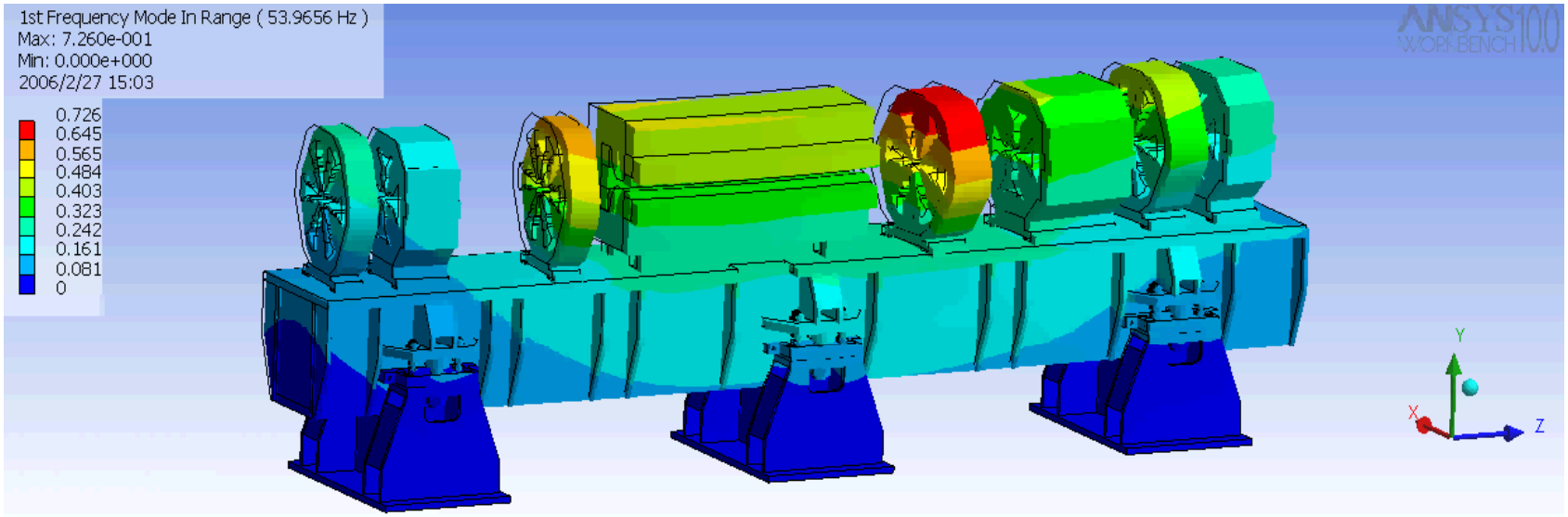

1st Frequency 54 Hz (rotation around longitudinal axis with girder bending)

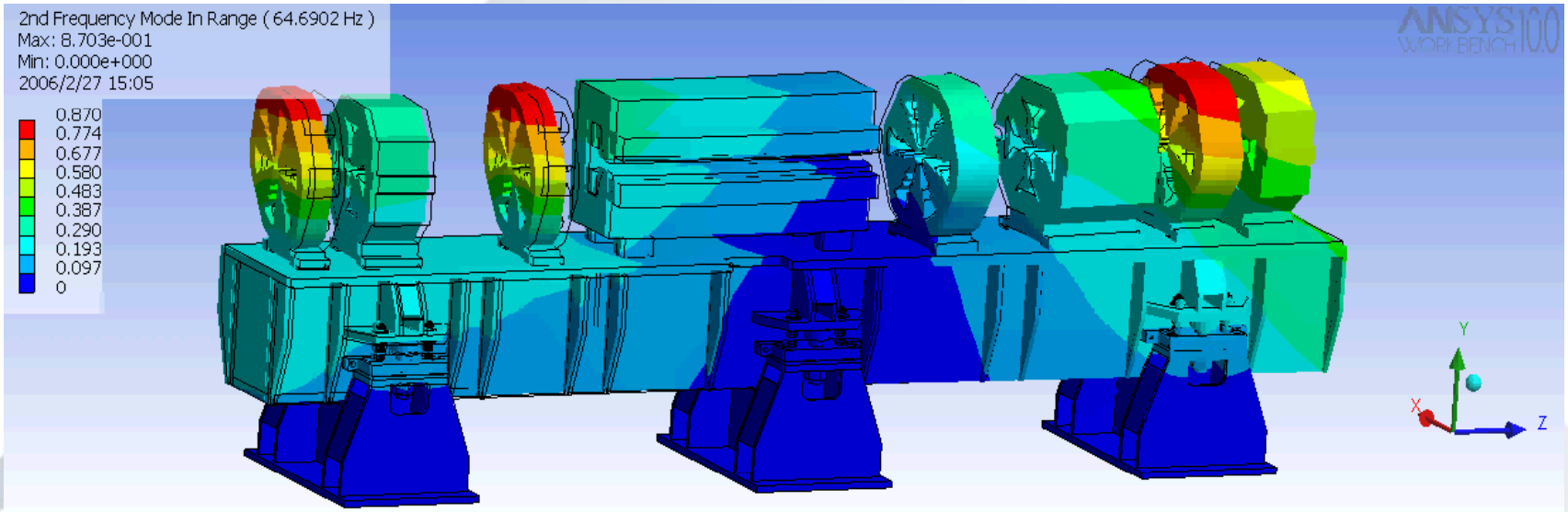

2nd Frequency 67 Hz (twist)

Frequencies and modes of vibration

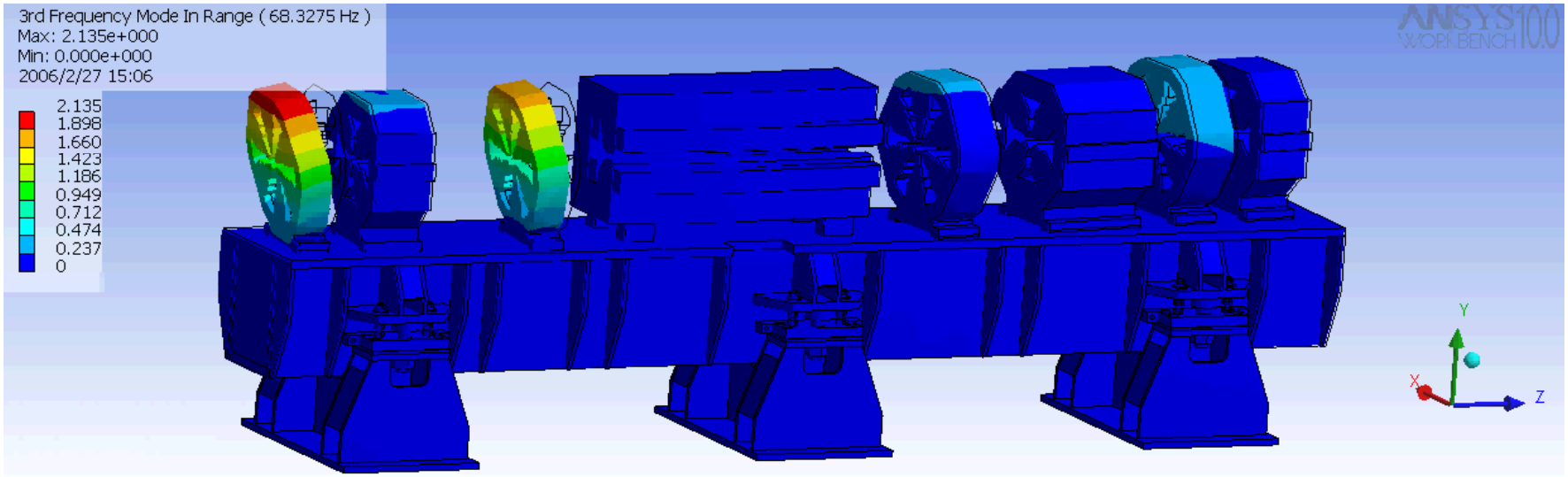

3rd Frequency 68 Hz, 4th Frequency 71 Hz, 5th Frequency 77 Hz (vibration of magnets)

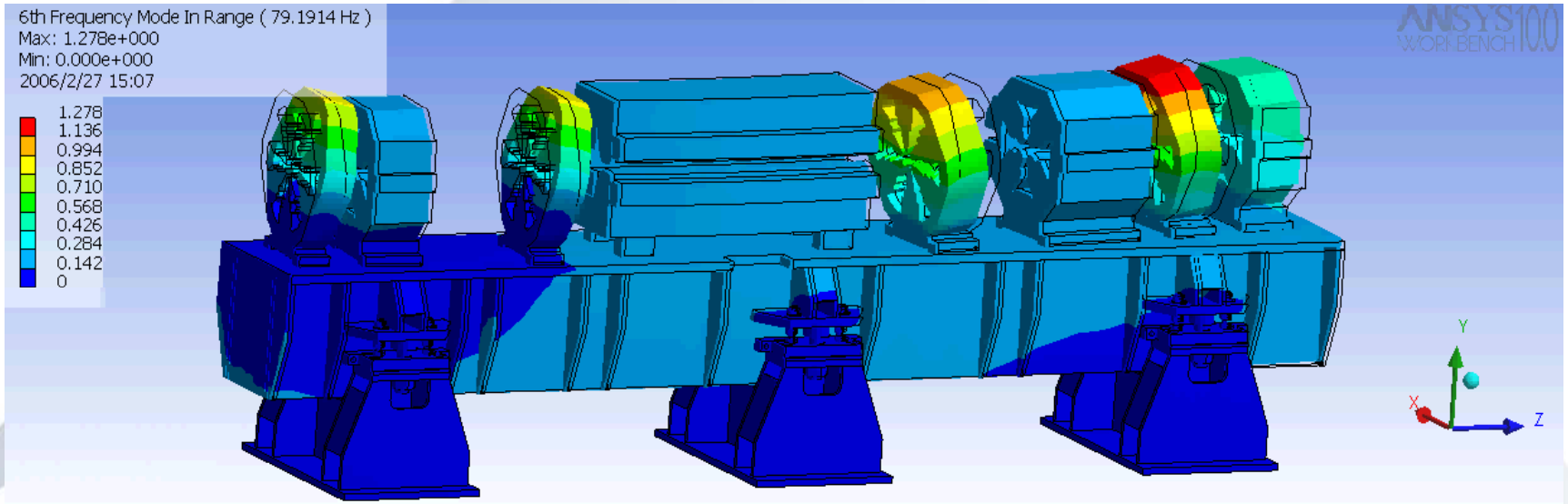

6th Frequency 79 Hz (magnets and girder vibration along longitudinal axis)

Conceptual design

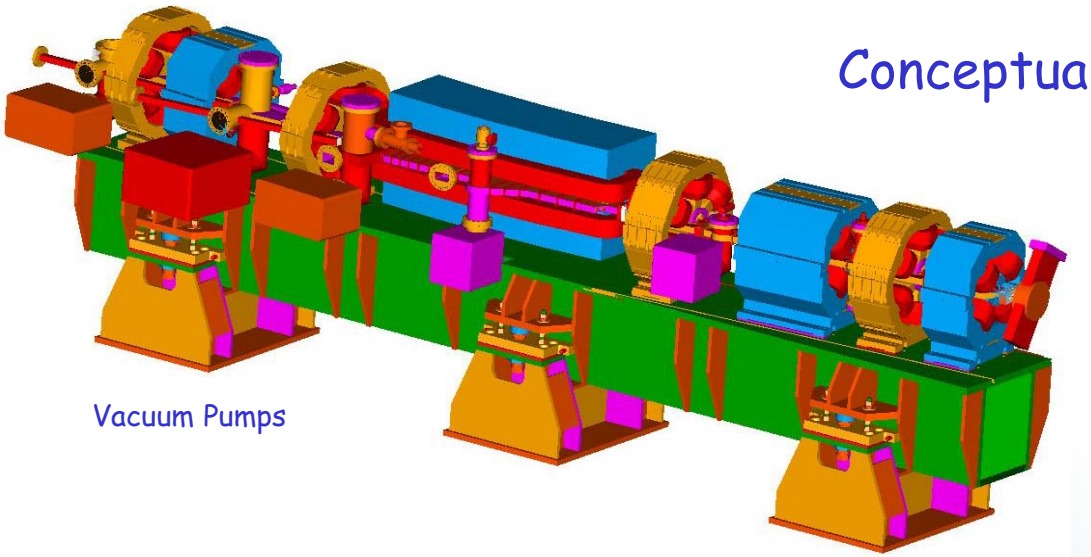

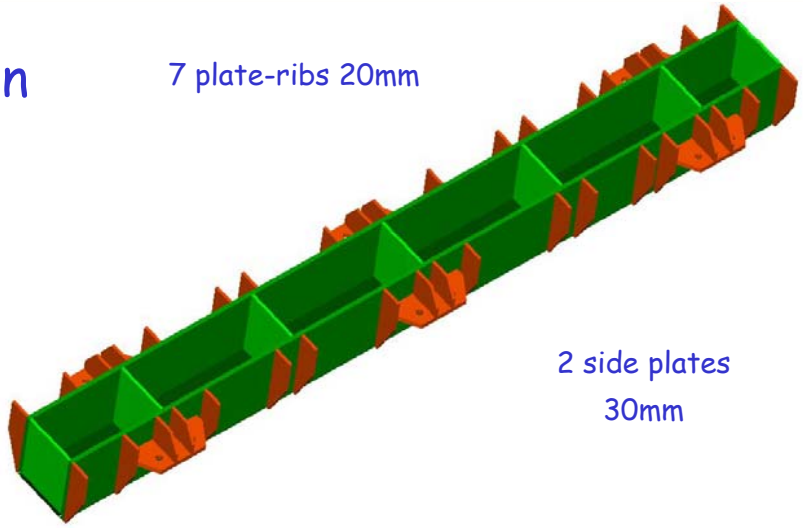

Girder structure

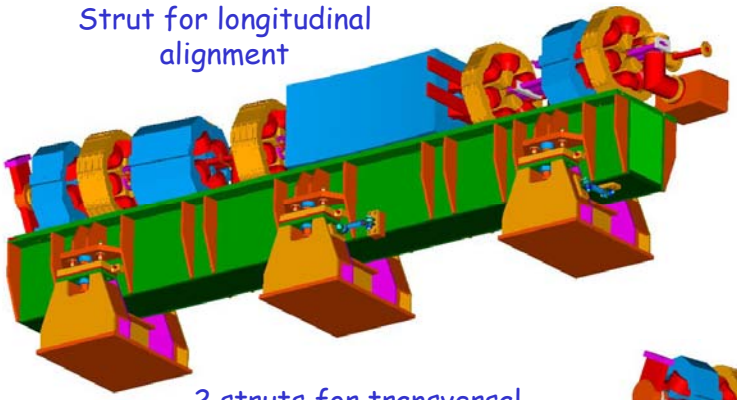

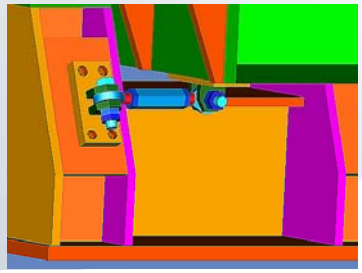

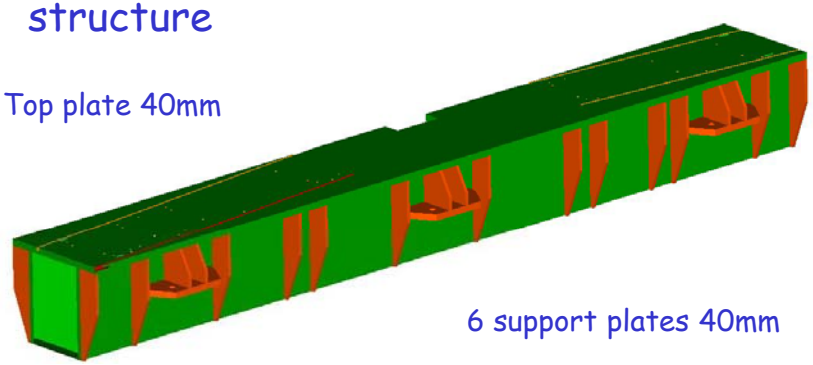

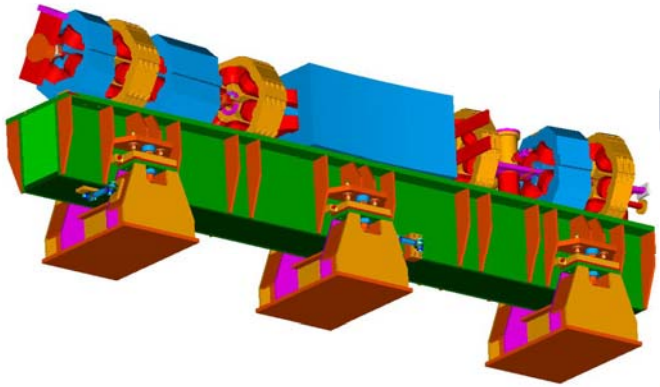

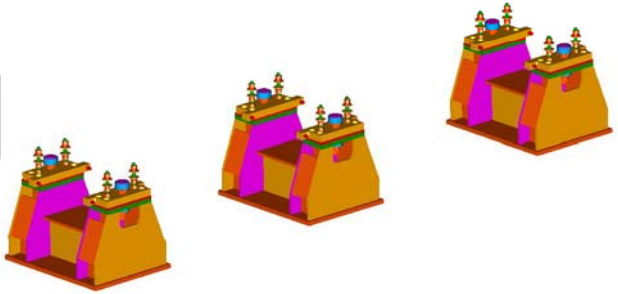

Pedestals

Spherical plain thrust bearings

Design

The washers of SKF spherical plain thrust bearings (fig 1) are made of carbon chromium steel and are hardened and ground. The sliding layer of glass fibre reinforced plastic containing PTFE is injection moulded in situ inside the housing washer. The sliding contact surface of the shaft washers is hard chromium plated and coated with a lithium base grease.

Tilt head

Vertical alignment and fixation – conceptual desig

Sliding disc

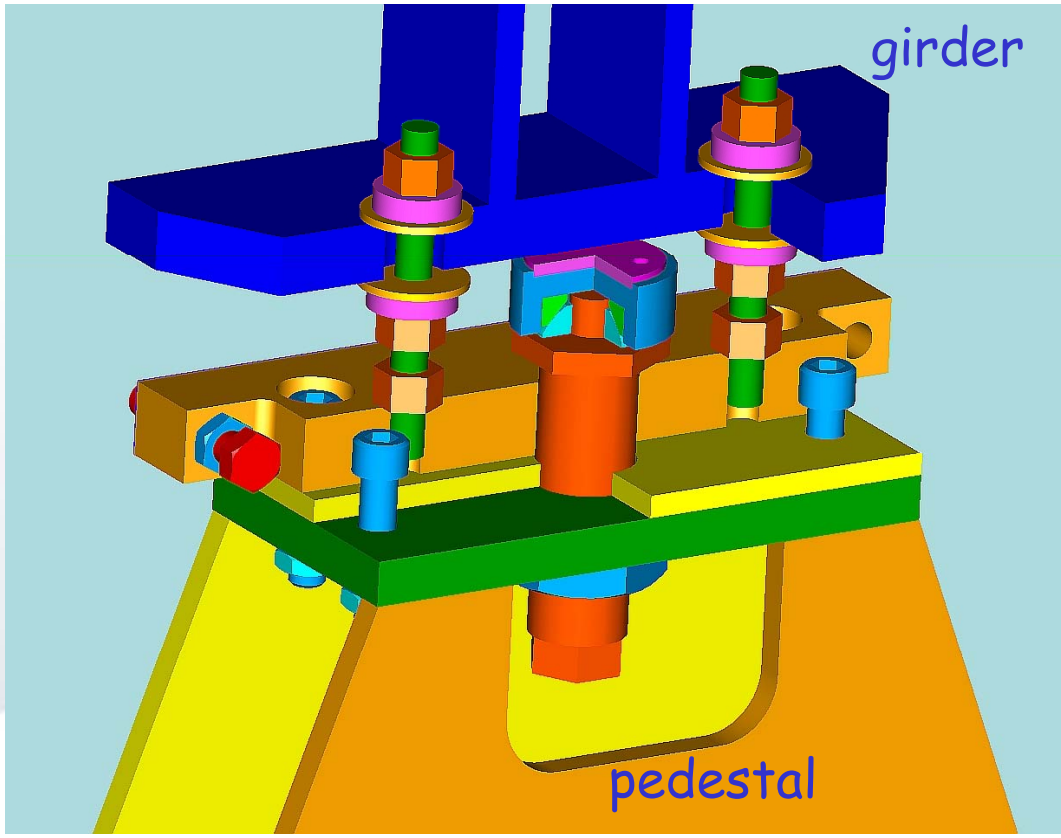

Stud vertical fixation

Stud M24, spherical washers, spring washer ("Belleville"), plane washers, nuts

Horizontal fixation - 2 screws M24

Spring-8 supports system

OILES 500 SP_1 is a self-lubricating bearing for heavy load applications. It consists of a high strength brass alloy base, prepared through an advanced casting technique in which for self-lubricating feature a proprietary solid lubricant buried therein.

Features

- Exhibits incomparable performance under a high load, low speed operation. Usable without lubrication
- Excellent wear resistance in such places where an oil film is difficult to be formed due to reciprocating, oscillating motions and frequently intermittent operations
- Remarkable resistance to corrosion and resistance to chemical attack
- Available in various dimensions standard products

Threaded jack M64

Shim to vertical adjustment (possible with viscoelastic damping film – to reduce vibration amplification)

4 supports girder configuration

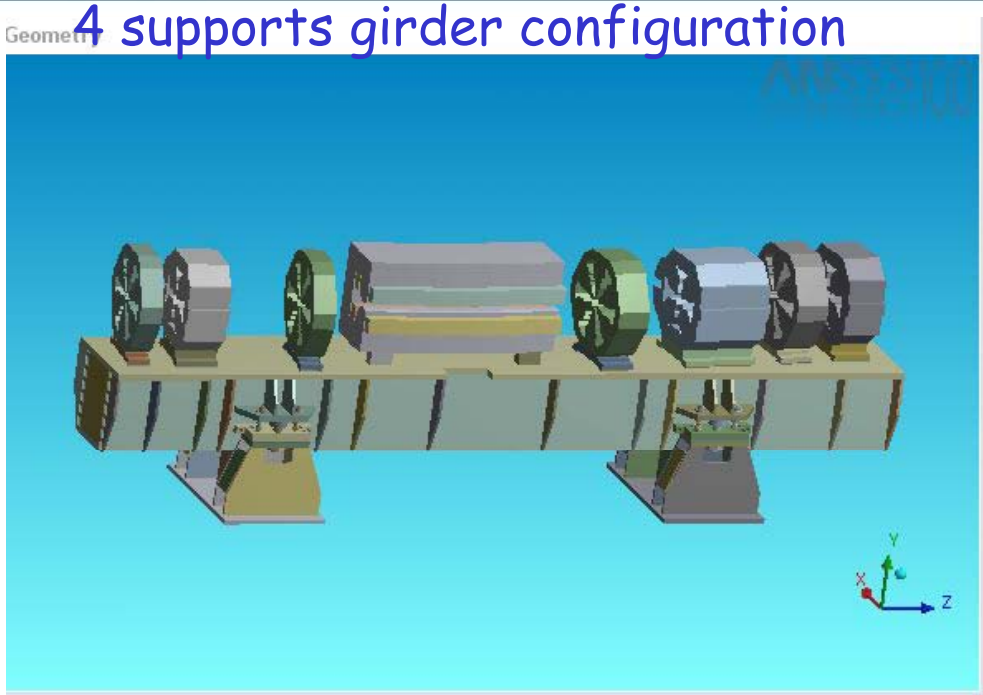

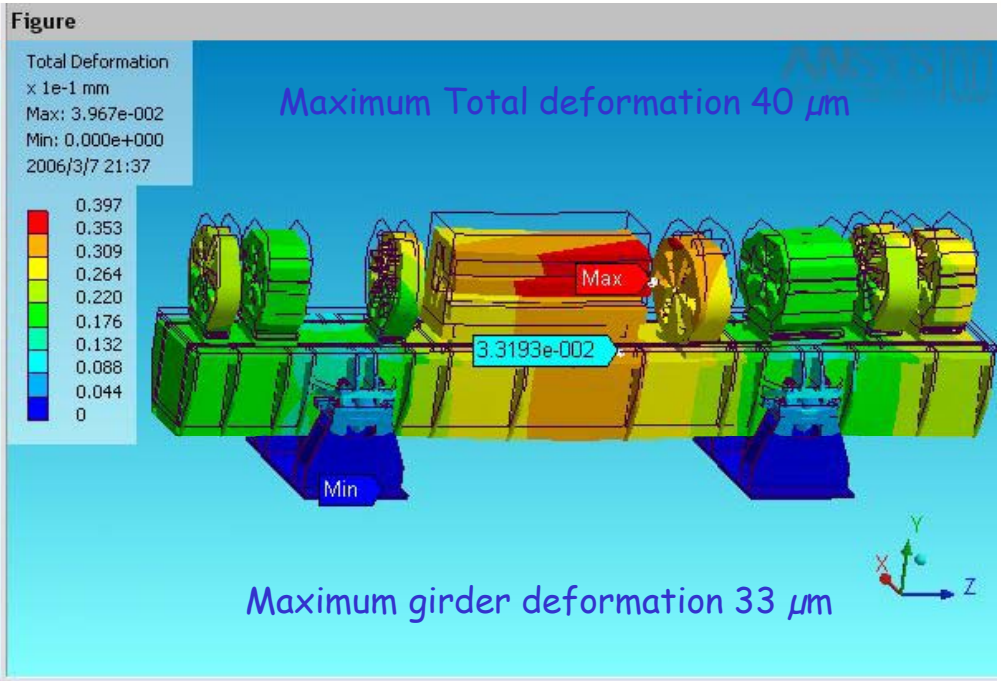

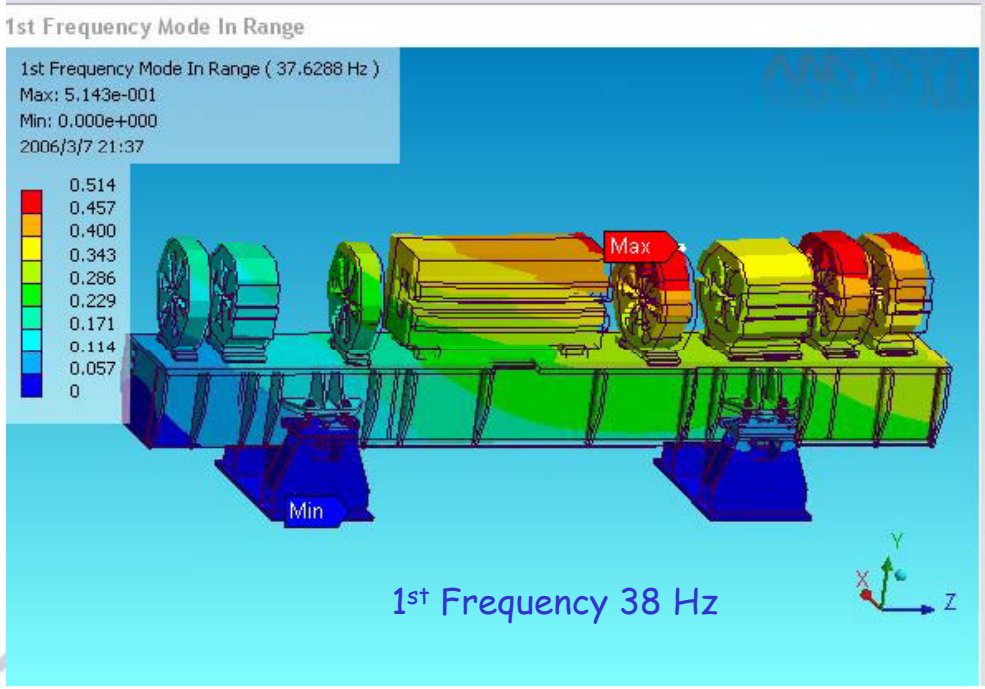

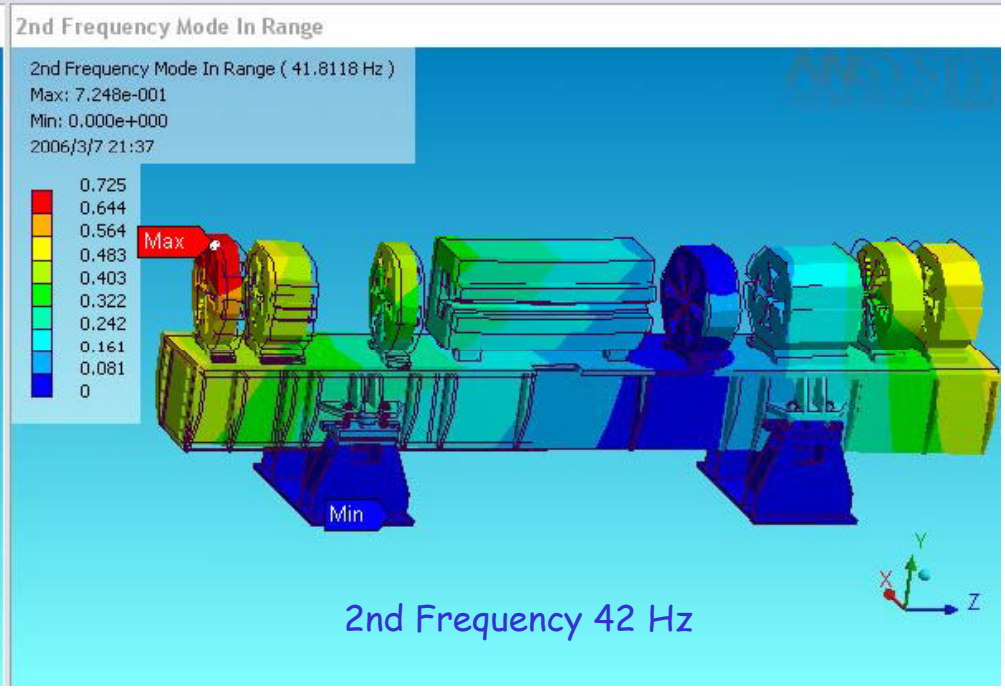

Prototyping

- The prototype has been delivered by the end of March 2007 (27.03.2007)
- The procedure of the girder installation was cross-checked (Girder to pedestal interface, pedestal to bground plates interface, ground plate to ground interface (epoxy layer).
- The alignment system and fixation was tested
- Static deformation measured (< 30 μm)
- Dimensional measurements, flatness of the reference surfaces and positions of the alignment pin holes, at 23°C ± 1°C.
- Pins inserted (LN2). Installation, magnets and vacuum system, procedure and tooling was tested.
- 2 independent vibration tests, by IDIADA in April and by DESY in July.

Dimensional crosscheck

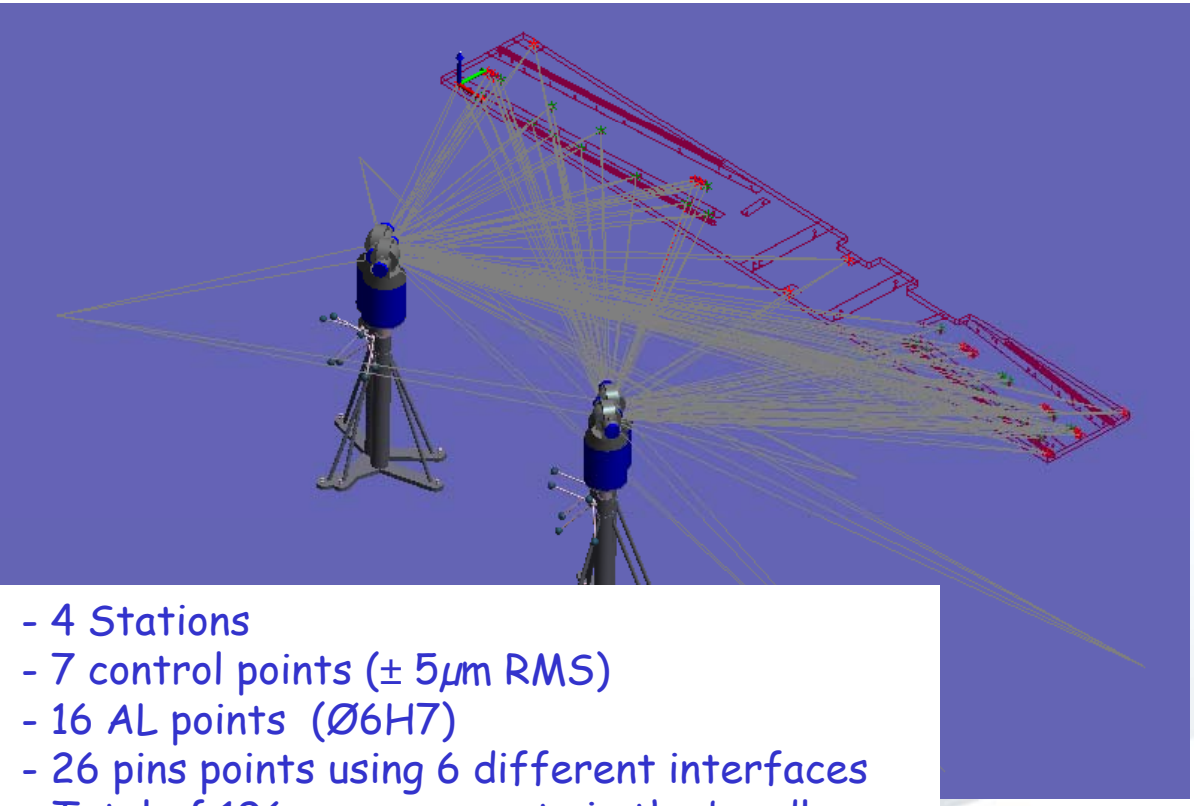

- 4 Stations
- 7 control points (± 5µm RMS)
- 16 AL points (Ø6H7)
- 26 pins points using 6 different interfaces
- Total of 196 measurements in the bundle adjustment.

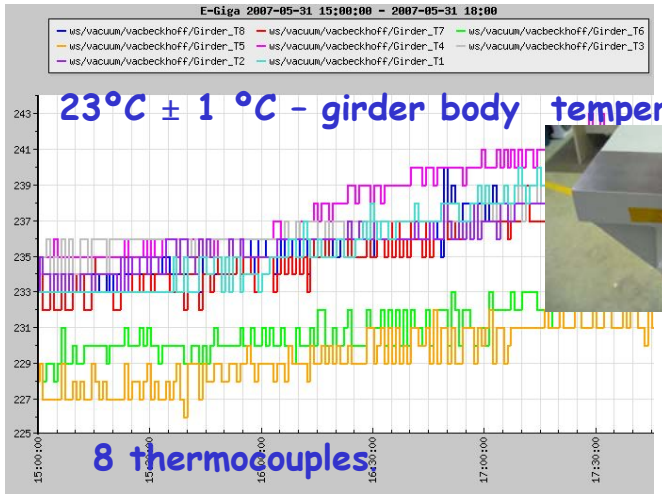

Surfaces with common flatness tolerance 30 µm for magnets supports, BPM supports, for alignment holes and level measurement

Holes with position tolerance 30 µm for alignment and for pins holes

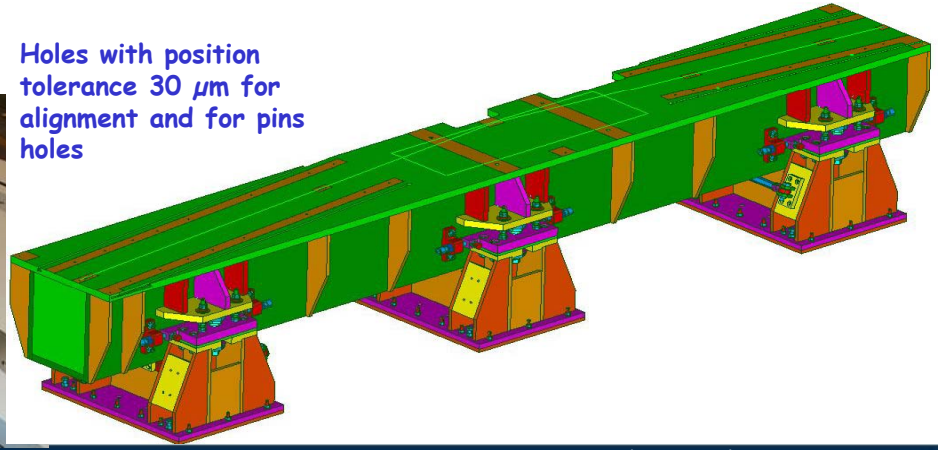

Instruments:

-Laser Tracker FARO Xi V2

- with 1.5" Corner Cube Reflector

FLATNESS

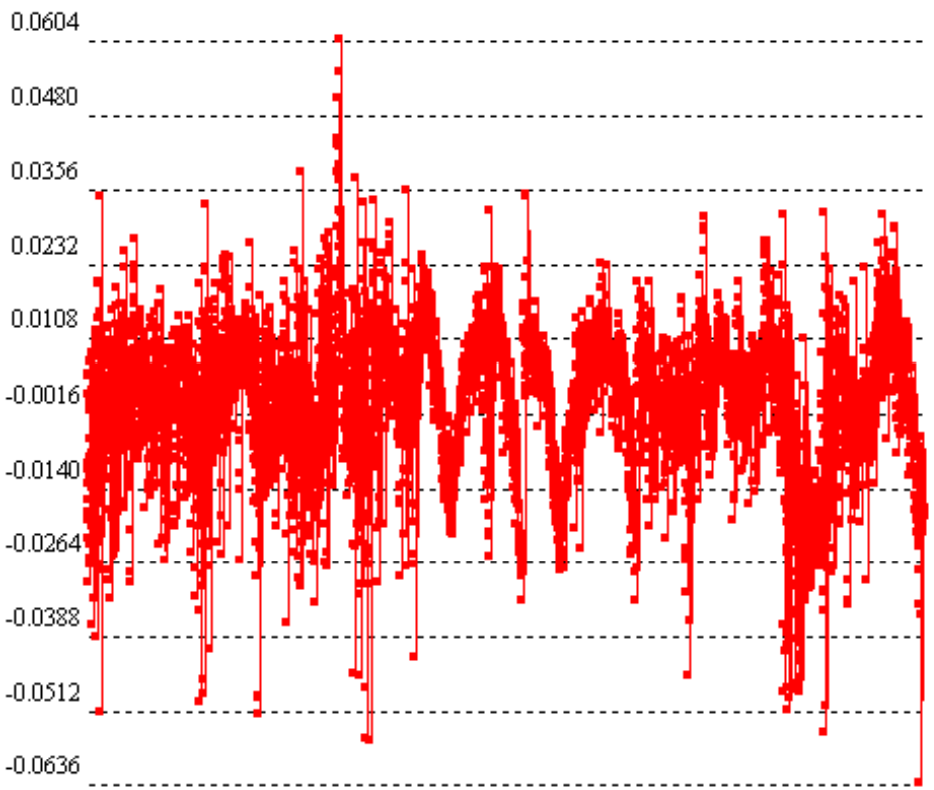

Results

DEVIATION STATS (excluding ignored points)
Mean = -0.000000 RMS = 0.012016 Millimeters
Magnitude
|Max| = 0.063596 |Min| = 0.000005 Millimeters
Signed
Max = 0.055254 Min = -0.063596 Millimeters

Working Frame: A::Frame from bundle, Units: Millimeters
Plane Fit Results:
Normal: x=0.000015, y=-0.000040, z=1.000000
D = 25.426635
Position: x=2670.541238, y=343.377044, z=-25.452233
Rotation: x=-0.002397, y=-0.000551, z=-172.812297

4403 In Tolerance, 997 Out of Tolerance, 2 Ignored
Tolerance = 0.015000 Millimeters

RMS = 12 μm

82 % points in tolerance – ± 15 μm

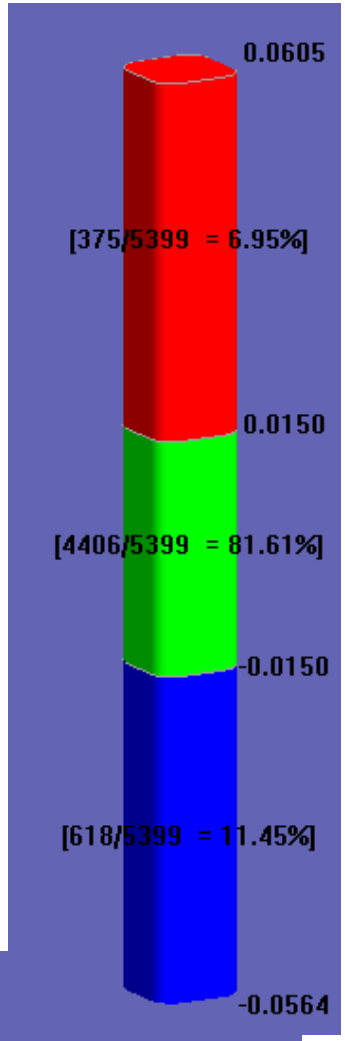

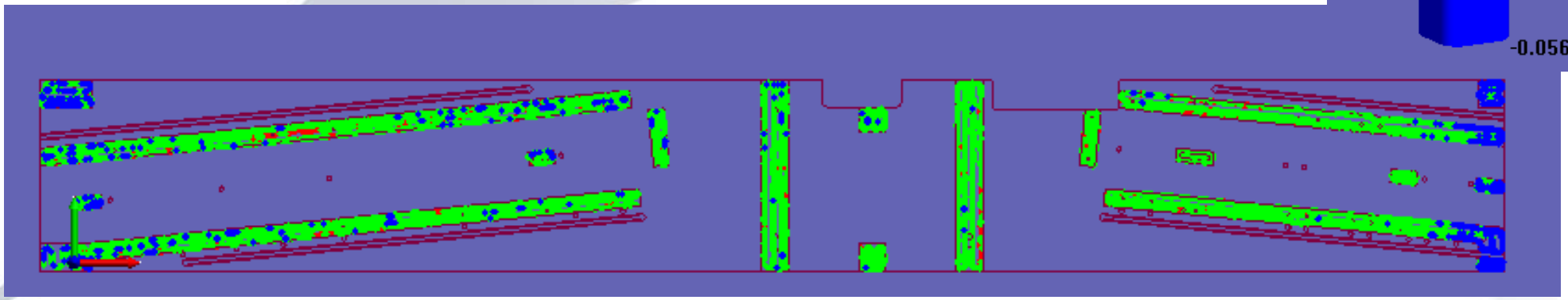

POSITIONS - alignment qand magnet pin holes

Depending on the best fit, the angle between entrance and exit of the beam oscillates between :

11.252° and *11.257°*

(nominal *11.25°*)

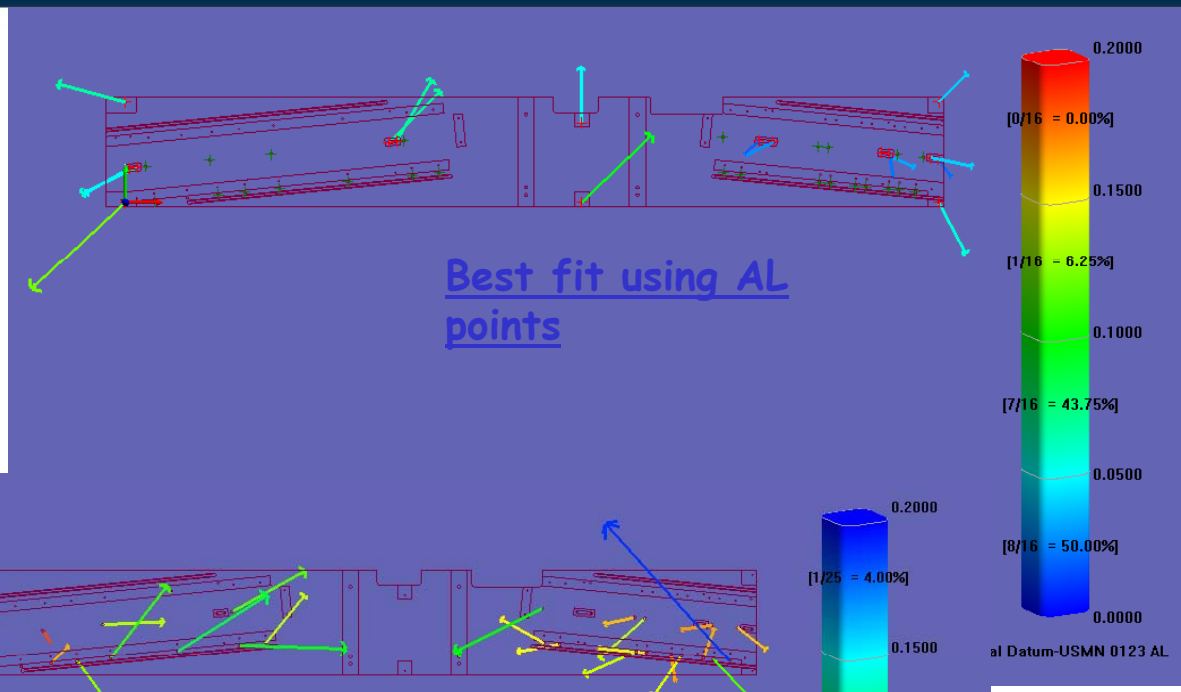

Best fit using AL points

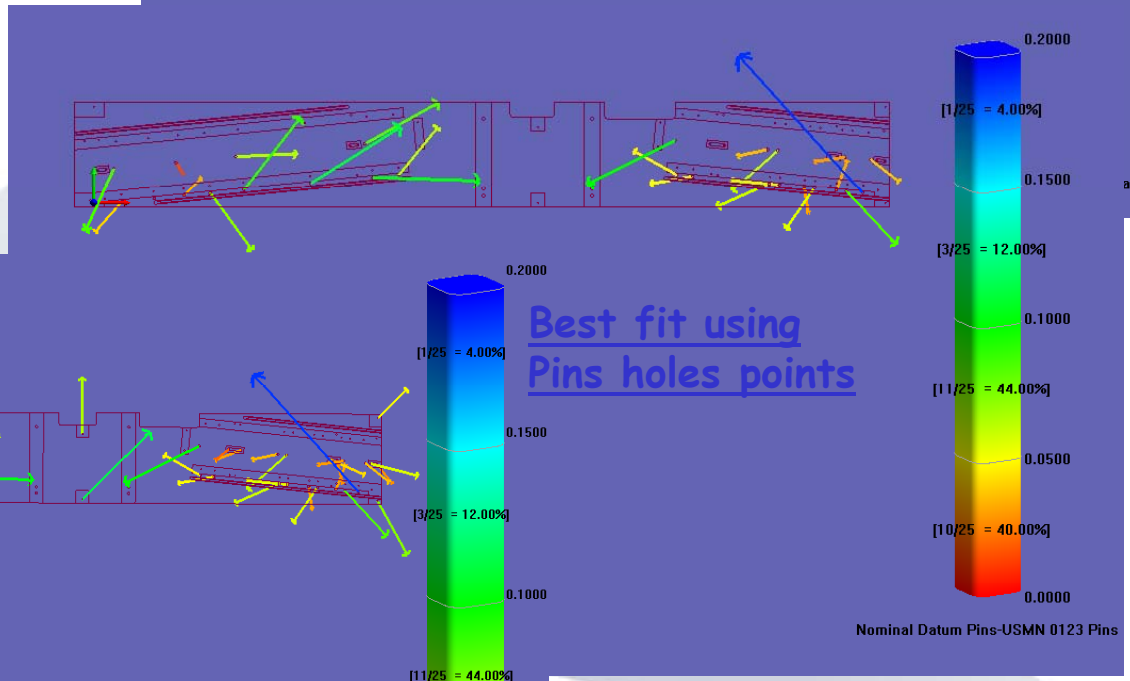

Best fit using Pins holes points

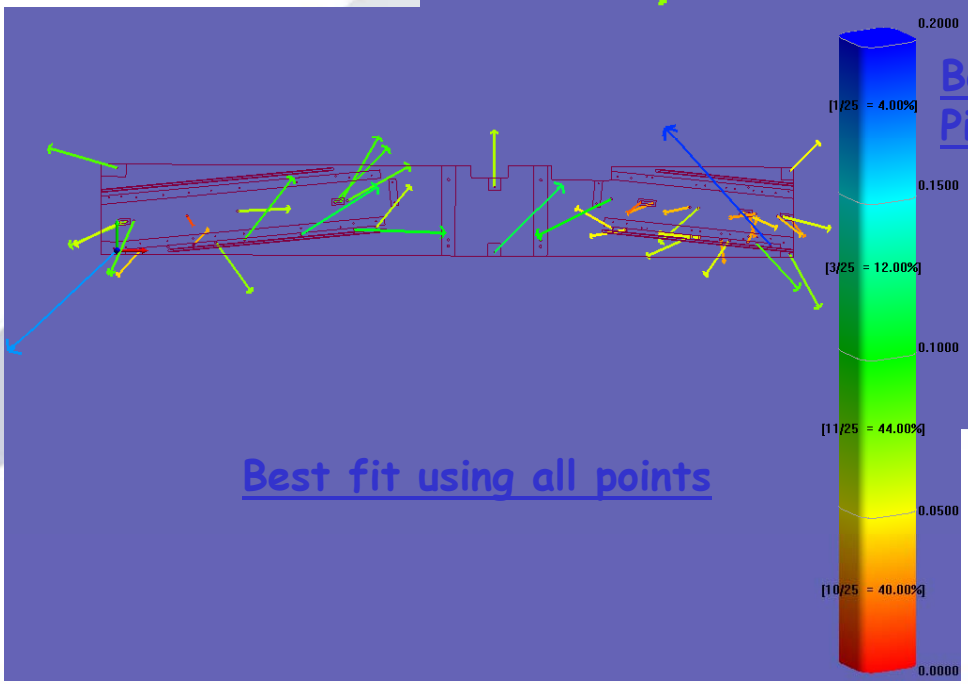

Best fit using all points

ACTIONS TO IMPROVE THE ACCURACY OF FINAL MACHINING

1) Modification of the milling machine to increase the working length to 6.5 m, adjustment of optical rules and CNC, improving machine base planarity and rigidity.
2) Construction of a room around the machine in order to keep the temperature at 23°C ± 0.75°C during machining.
3) Include strict temperature control on machine and girders in the machining procedure.

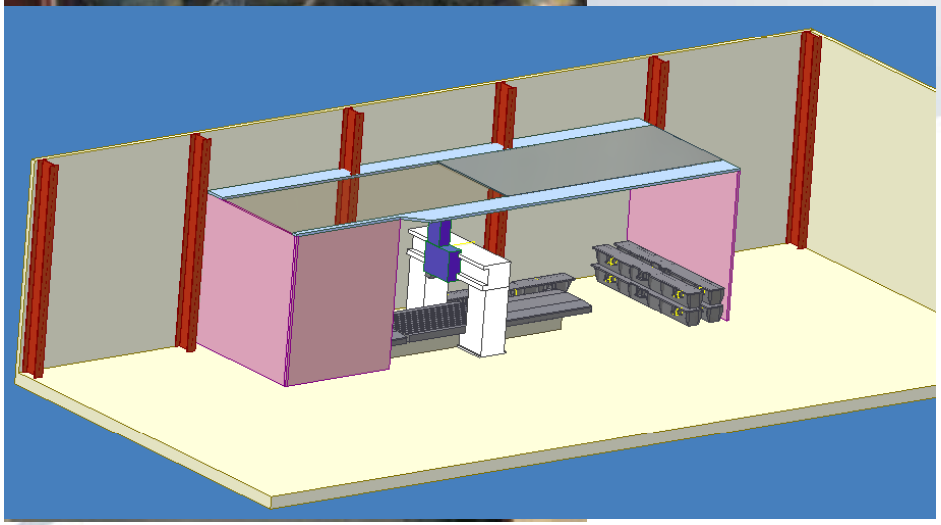

SR GIRDER AS-BUILT

Girder: C4
Date:06/06/2008
Place: UAB Workshop
Units: mm
Temperature: 22.4º
Instruments: Laser Tracker Faro XI V2 + 1.5" CCR
Operator: A.Villalobos - E.Pulido

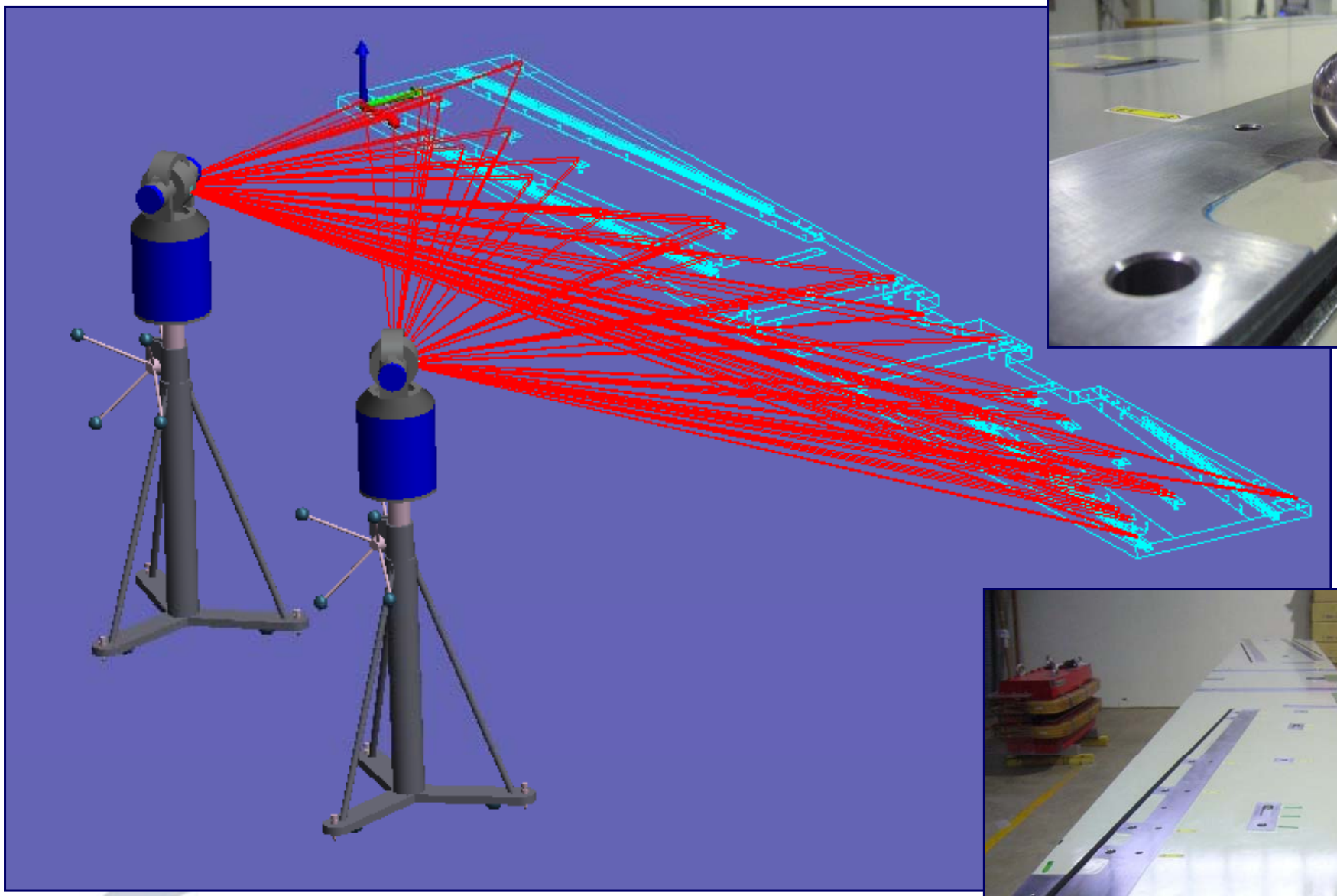

FLATNESS

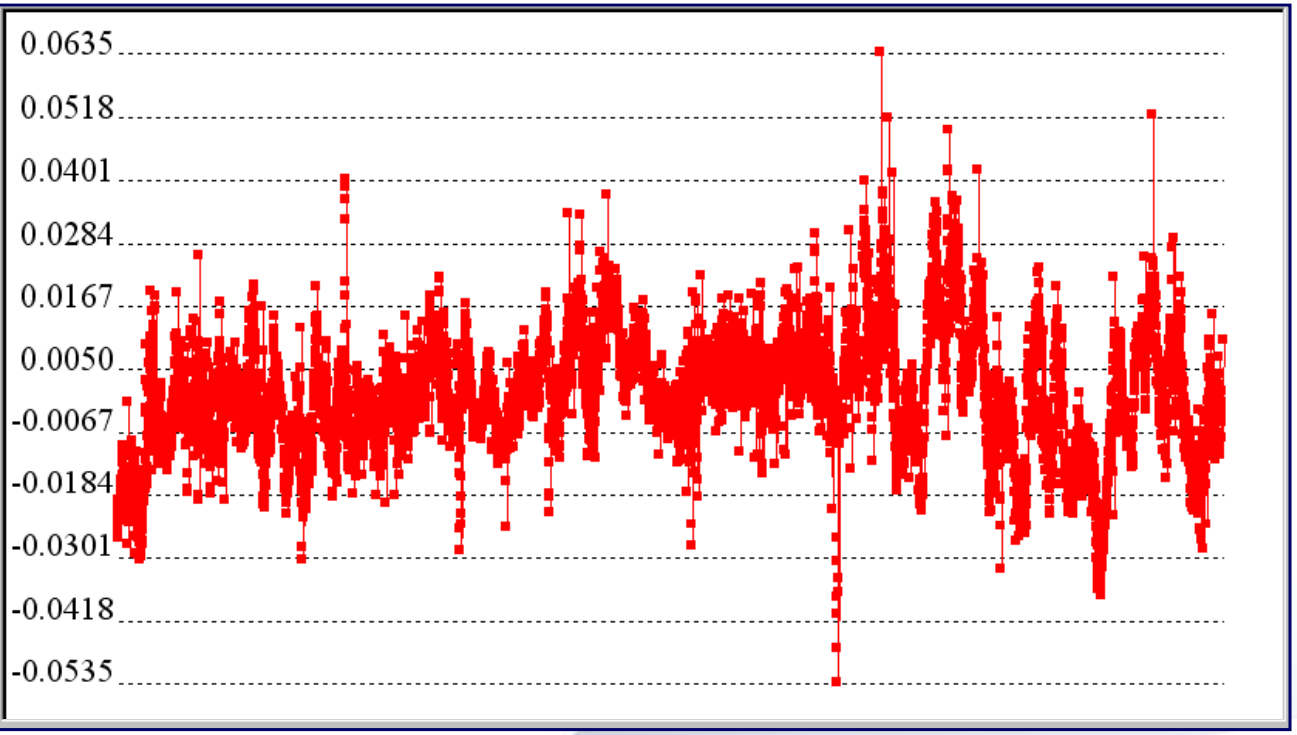

Results

DEVIATION STATS

Mean = 0.000000 RMS = 0.010998 Millimeters

Magnitude

|Max| = 0.063520 |Min| = 0.000000 Millimeters

Signed

Max = 0.063520 Min = -0.053475 Millimeters

Working Frame: GIRDER C::girderC, Units: Millimeters

Plane Fit Results:

Normal: x=-0.000004, y=-0.000022, z=-1.000000

D = 0.021856

Position: x=2569.936074, y=327.617463, z=0.004763

Rotation: x=-179.998714, y=-0.000085, z=173.976101

6789 Points Used

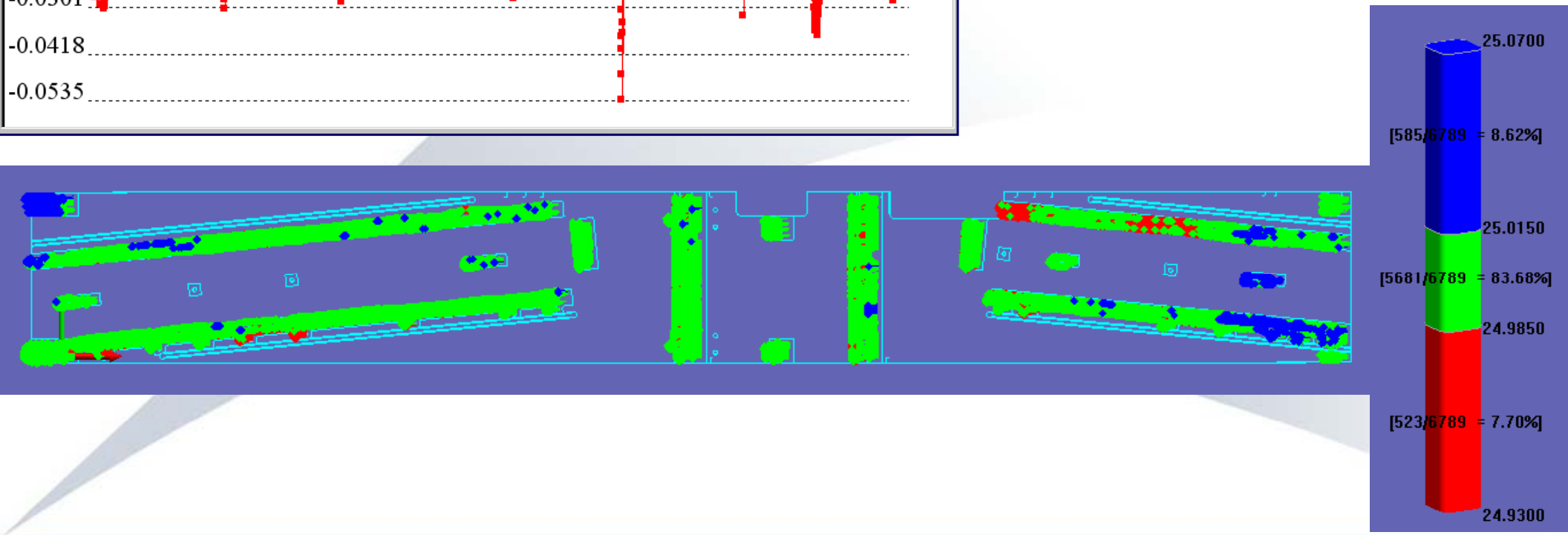

PINS POSITION

Results	X	Y	Z	Mag.
Count	30	30	30	30
Max Error	0.0353	0.0677	0.0000	0.0710
RMS Error	0.0119	0.0228	0.0000	0.0258
StdDev Error	0.0121	0.0232	0.0000	0.0262
Max Error (all)	0.0353	0.0677	0.0000	0.0710
RMS Error (all)	0.0119	0.0228	0.0000	0.0258
Transformation				
Translation	1519.3624	1345.1915	-0.0219	2029.2861
Rotation (Fixed XYZ)	0.0013	-0.0002	-73.6441	
Rotation (Euler xyz)	-73.6441	-0.0013	0.0001	
Rotation (Angle axis)	0.0000	-0.0000	-1.0000	73.6441
Scale Factor				1.000000
Matrix	0.2816	0.9595	-0.0000	1519.3624
	-0.9595	0.2816	-0.0000	1345.1915
	0.0000	0.0000	1.0000	-0.0219
	0.0000	0.0000	0.0000	1.0000

Name	dX	dY	dZ	dMag
GB	-0.0215	-0.0677	-0.0000	0.0710
3AL	-0.0003	-0.0574	-0.0000	0.0574
15M	0.0353	-0.0297	-0.0000	0.0461
2AL	0.0058	0.0403	0.0000	0.0407
14M	0.0182	-0.0355	-0.0000	0.0399
10M	0.0261	-0.0045	-0.0000	0.0265
17M	0.0056	-0.0258	-0.0000	0.0263
16M	0.0045	0.0223	0.0000	0.0227
24M	-0.0070	0.0192	0.0000	0.0204
12M	-0.0008	0.0188	0.0000	0.0188
8M	-0.0100	0.0156	0.0000	0.0185
22M	-0.0031	0.0173	0.0000	0.0176
6M	-0.0072	0.0160	0.0000	0.0176
9M	-0.0063	0.0164	0.0000	0.0175
7M	-0.0157	0.0075	-0.0000	0.0174
3M	-0.0149	0.0032	0.0000	0.0153
1M	0.0126	0.0085	-0.0000	0.0152
25M	0.0013	0.0150	0.0000	0.0151
21M	0.0057	0.0121	0.0000	0.0134
18M	-0.0114	0.0062	0.0000	0.0130
11M	-0.0073	0.0098	0.0000	0.0123
4M	0.0039	-0.0115	-0.0000	0.0121
5M	-0.0085	0.0083	0.0000	0.0119
G0	-0.0111	-0.0037	0.0000	0.0117
GA	0.0045	0.0077	0.0000	0.0089
1AL	0.0080	0.0020	-0.0000	0.0083
20M	0.0012	-0.0082	-0.0000	0.0082
19M	-0.0064	-0.0015	0.0000	0.0066
23M	0.0009	-0.0056	0.0000	0.0057
2M	-0.0020	0.0048	0.0000	0.0052

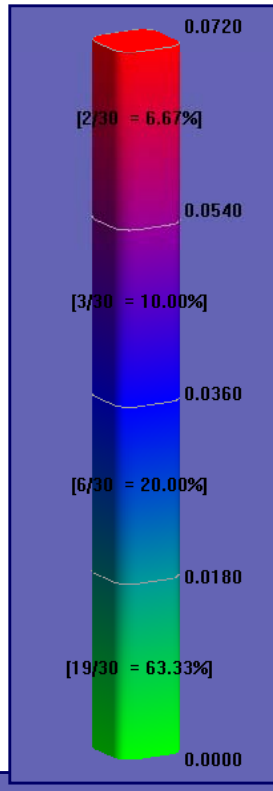

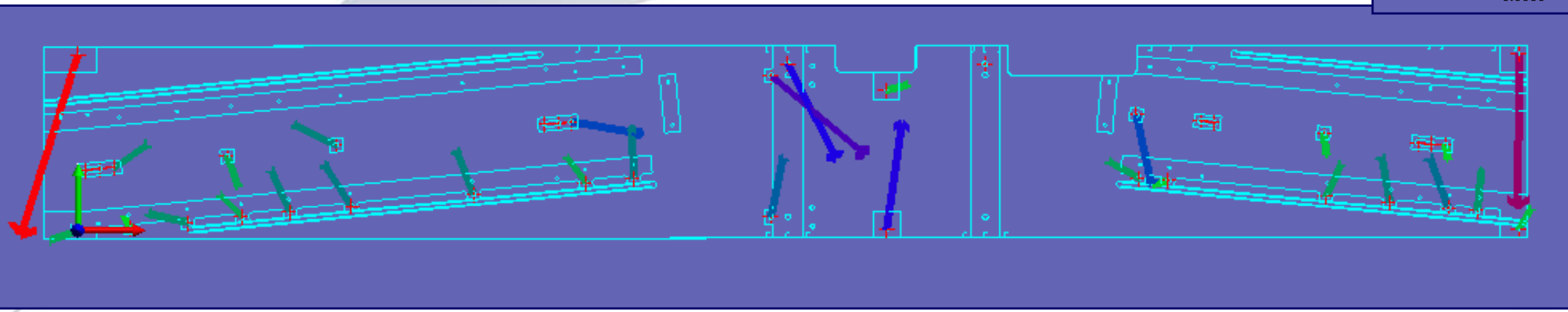

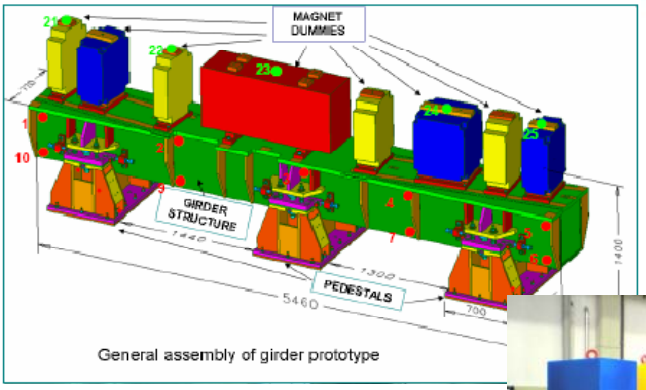

General assembly of girder prototype

Excitation on three points/directions. 25 points tri-axial measurements.

Frequency Response Function acceleration divided by force

Test instrumentation:
- PCB 339B01 accelerometers (5)
- LMS PIMENTO acquisition system
- LMS CADA-X Modal Analysis software

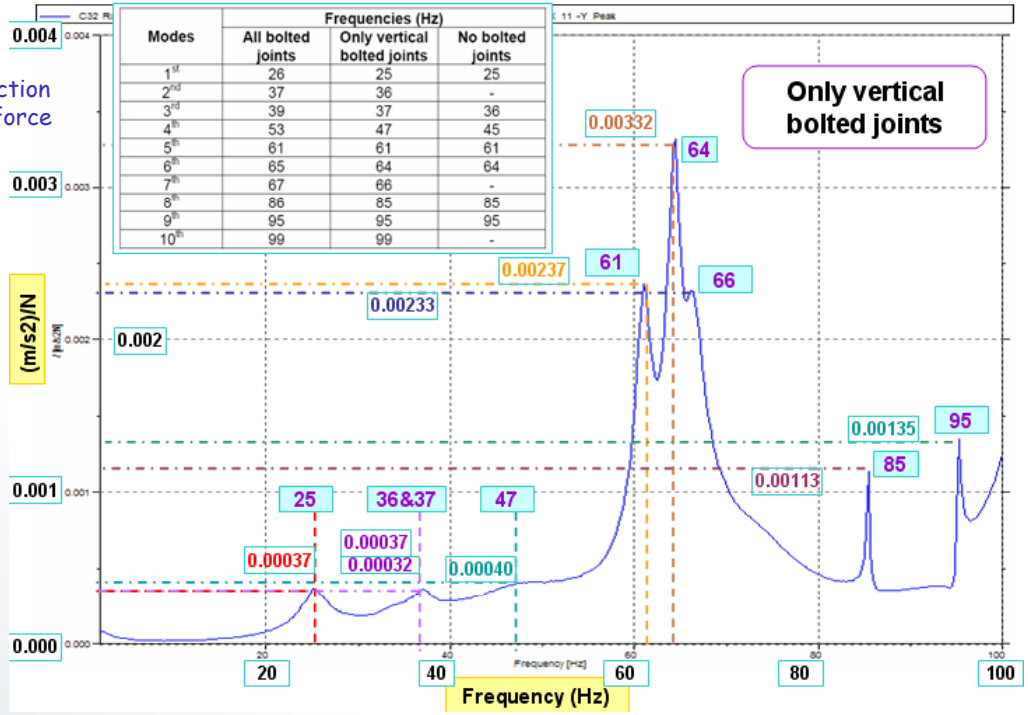

Modes	Frequencies (Hz)		
	All bolted joints	Only vertical bolted joints	No bolted joints
1st	26	25	25
2nd	37	36	-
3rd	39	37	36
4th	53	47	45
5th	61	61	61
6th	65	64	64
7th	67	66	-
8th	86	85	85
9th	95	95	95
10th	99	99	-

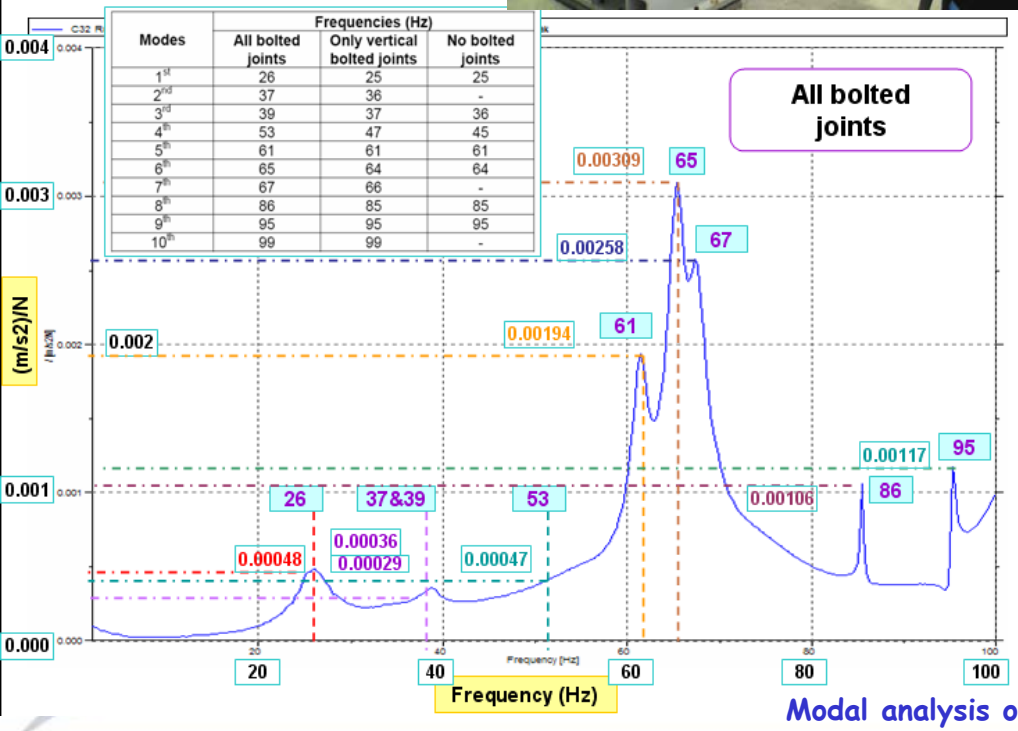

Modes	Frequencies (Hz)		
	All bolted joints	Only vertical bolted joints	No bolted joints
1st	26	25	25
2nd	37	36	-
3rd	39	37	36
4th	53	47	45
5th	61	61	61
6th	65	64	64
7th	67	66	-
8th	86	85	85
9th	95	95	95
10th	99	99	-

Mode	With all bolted joints		Only vertical bolted joints	
	Freq (Hz)	Description	Freq (Hz)	Description
1st	26	Bucking of the top plate + rotation around the longitudinal axis	25	Rotation around the longitudinal axis
2nd	37	Rotation around the transversal axis	36	Rotation around the transversal axis
~~3rd~~	~~39~~	Torsion of the assembly	37	Torsion of the assembly
4th	53	Flexion + rotation of magnets 21 and 22 (see Figure 4) in phase	47	Flexion + rotation of magnets 21 and 22 in phase (see Figure 4)
~~5th~~	~~61~~	Flexion + rotation of magnet 22 (see Figure 4)	61	Flexion + rotation of magnet 22 (see Figure 4)
6th	65	Longitudinal flexion + rotation of magnets 21 and 22 (see Figure 4) in opposition of phase	64	Longitudinal flexion + lateral flexion + rotation of magnets 21 and 22 (see Figure 4) in opposition of phase
7th	67	Longitudinal flexion of the beam + rotation of magnets 21 and 22 (see Figure 4) out of phase	66	Longitudinal flexion of the beam + lateral flexion of the beam + rotation of magnets 21 and 22 (see Figure 4) out of phase
8th	86	Rotation of magnets 21 and 25 (see Figure 4)	85	Rotation of magnets 21 and 25 (see Figure 4)
9th	95	Rotation of magnet 25 (see Figure 4)	95	Rotation of magnet 25 (see Figure 4)
10th	99	Flexion of the beam + circular movement of 24 and 25 magnet ends (see Figure 4)	99	Flexion of the beam + circular movement of 24 and 25 magnet ends (see Figure 4)

Table 1. Natural frequencies and description of their corresponding mode shapes with all bolted joints and vertical bolted joints only

Modal analysis of a girder of ALBA synchrotron I.Fernandez, J.J. Garcia (IDIADA)

Test instrumentation:

- Two triaxial seismometers (Güralp, CMG-6TD, frequency range: 60s -80 Hz) one on the girder surface, one on the floor.
- Four single axis (two vertical and two horizontal) geophones (SENSOR SM-6), placed:
  - On the pedestal platform and the surface of the girder & on the floor and the pedestal platform to evaluate the transfer function of the girder structure.
  - On the surface of the girder and the magnet dummies to evaluate the transfer function between the girder and the magnet dummies.
  - On the left and right most corners of the girder surface to look for any twist modes predicted by FEA (ANSYS).

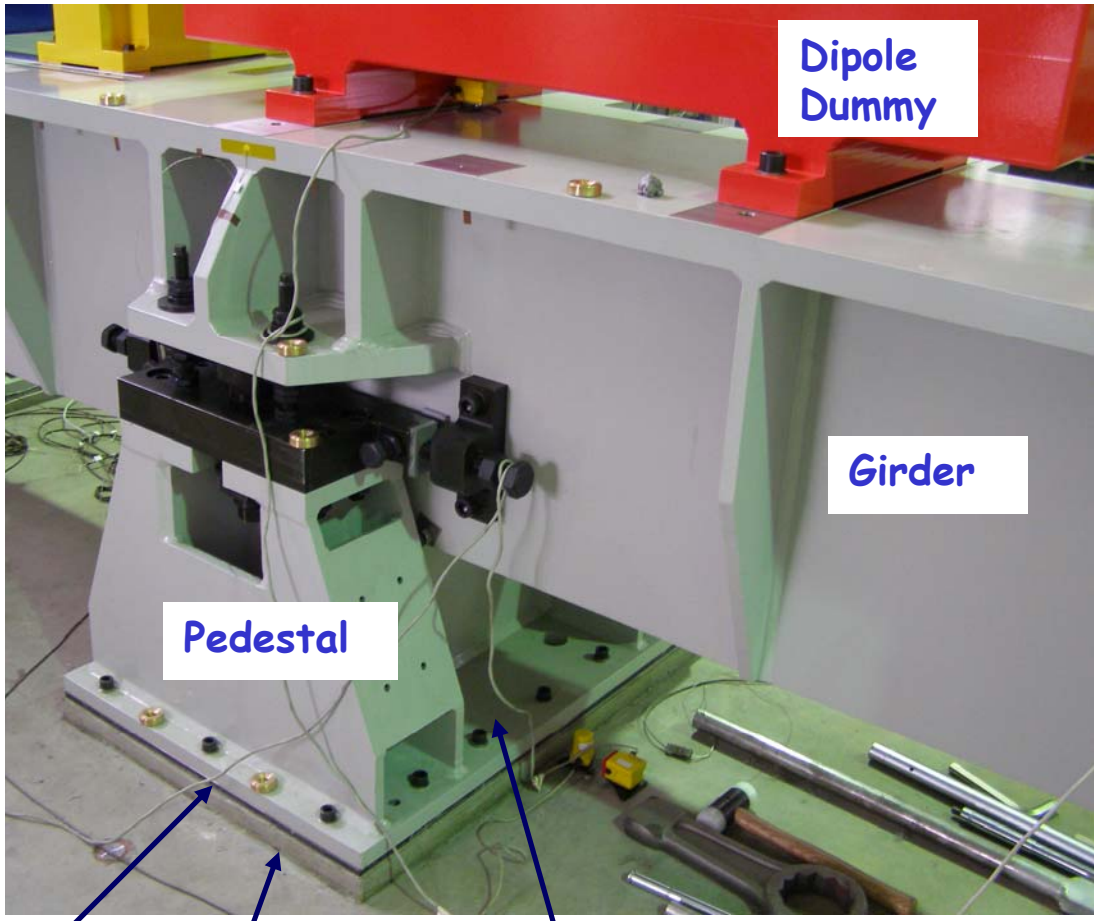

Black Steel Base Plate

Pedestal Platform

Concrete Epoxy Layer

Average displacement PSD and integrated PSD of vertical vibration measured on the girder versus the ground

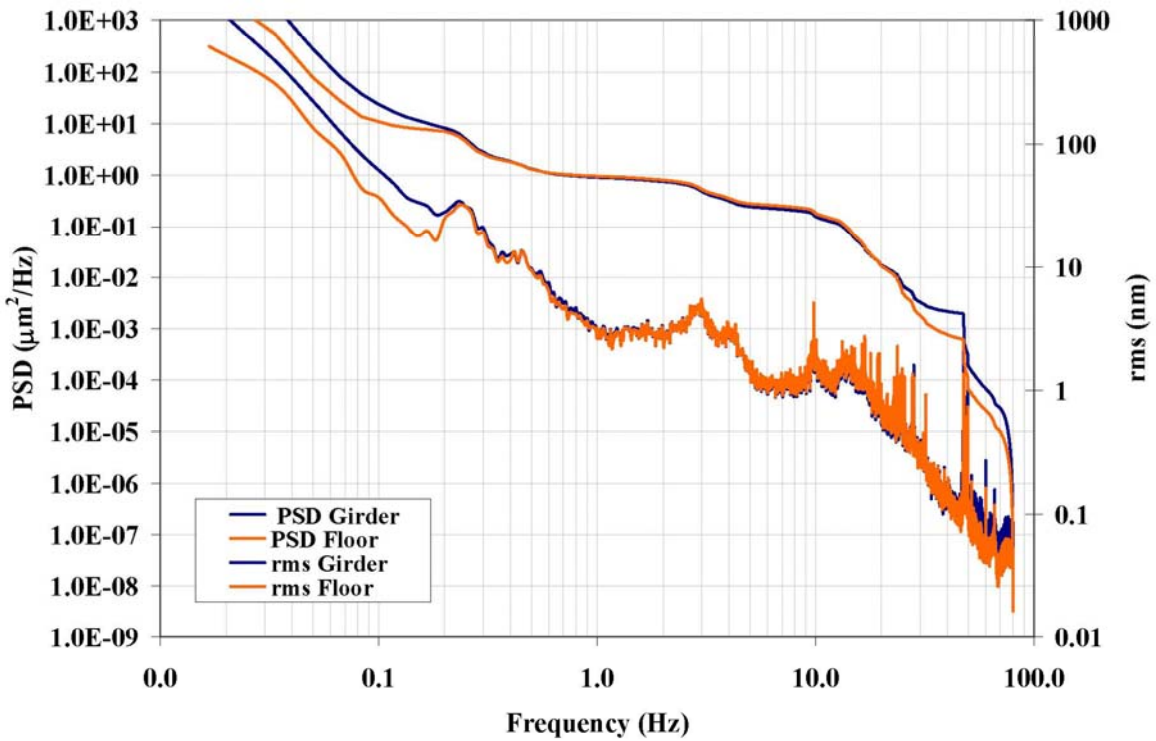

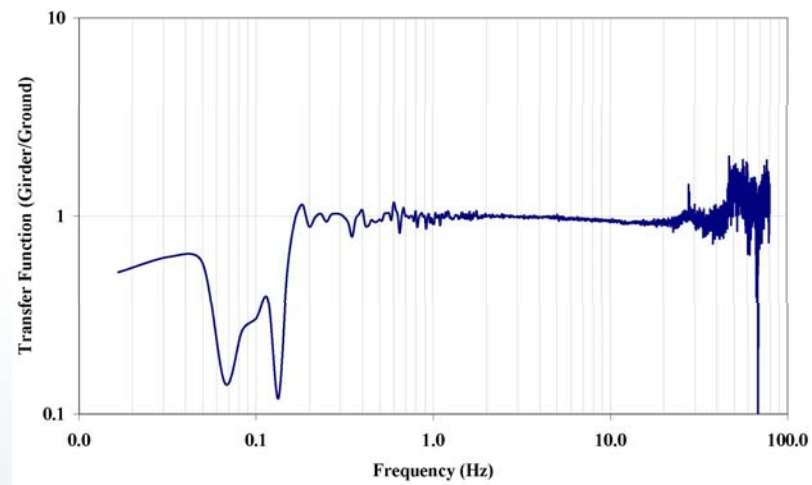

Transfer function ~ 1 up to 40 Hz

Girder design rigid in vertical direction

PSD of 6-Point vs. 3-Point Girder Support (Horizontal Transverse)

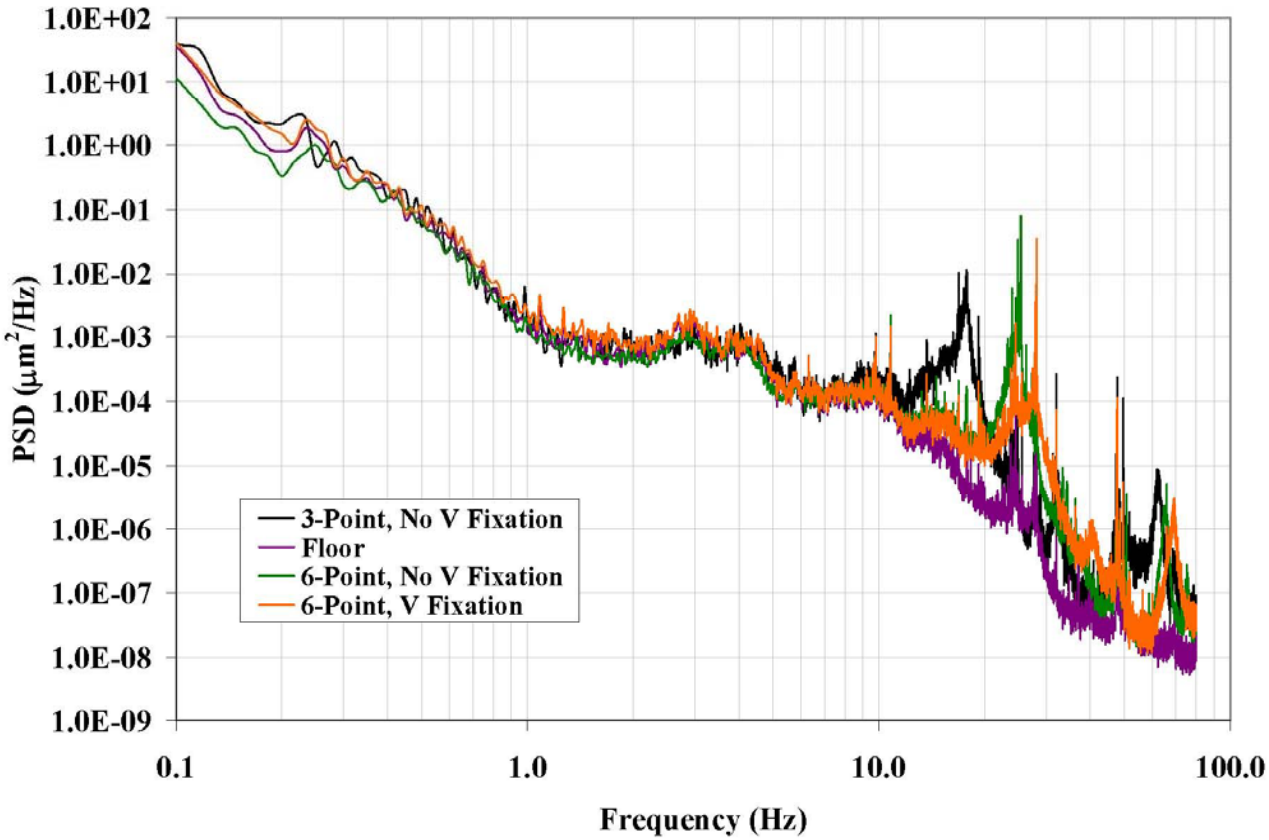

- Baseline design, 6-point support & vertical fixation (shown in orange): 28 Hz rocking due to the girder/ground interface; 70 Hz is first eigen mode of the girder; 24 Hz is due to a vacuum pump nearby and is unrelated to the girder structure.
- 6-point support & no vertical fixation (shown in green): high amplitude @28 Hz as the 28 Hz peak is pushed backwards to 24 Hz and is combined with the 24 Hz peak due to the vacuum pump; 70 Hz is pushed to 66 Hz.
- 3-point support and no vertical fixation (shown in black): 28 Hz peak is pushed backwards to 18 Hz; 70 Hz is pushed to 64 Hz.

Integrated Displacement PSD of 6-Point vs. 3-Point Girder Support (Horizontal Transverse)

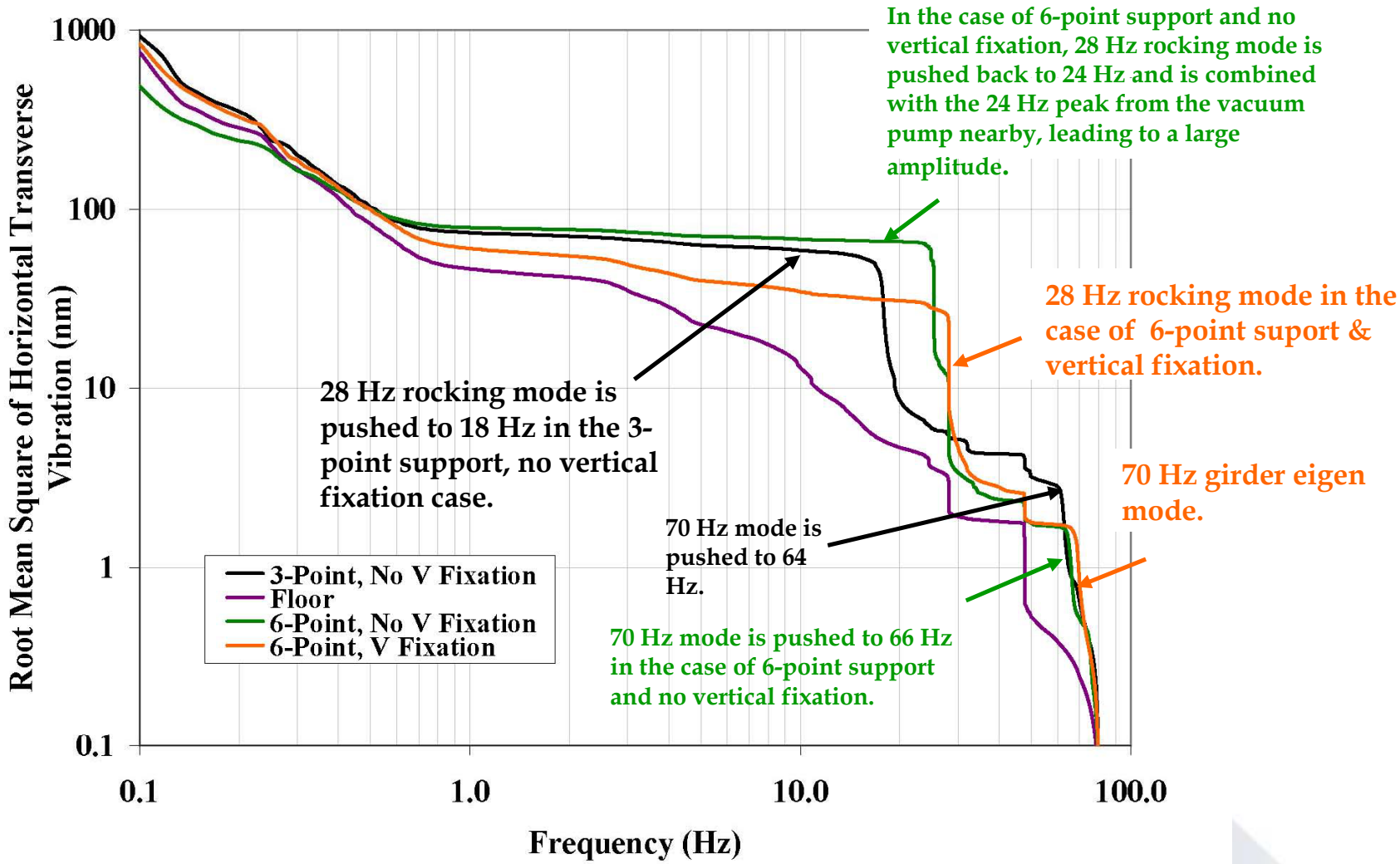

Transfer function on the magnets horizontal transverse

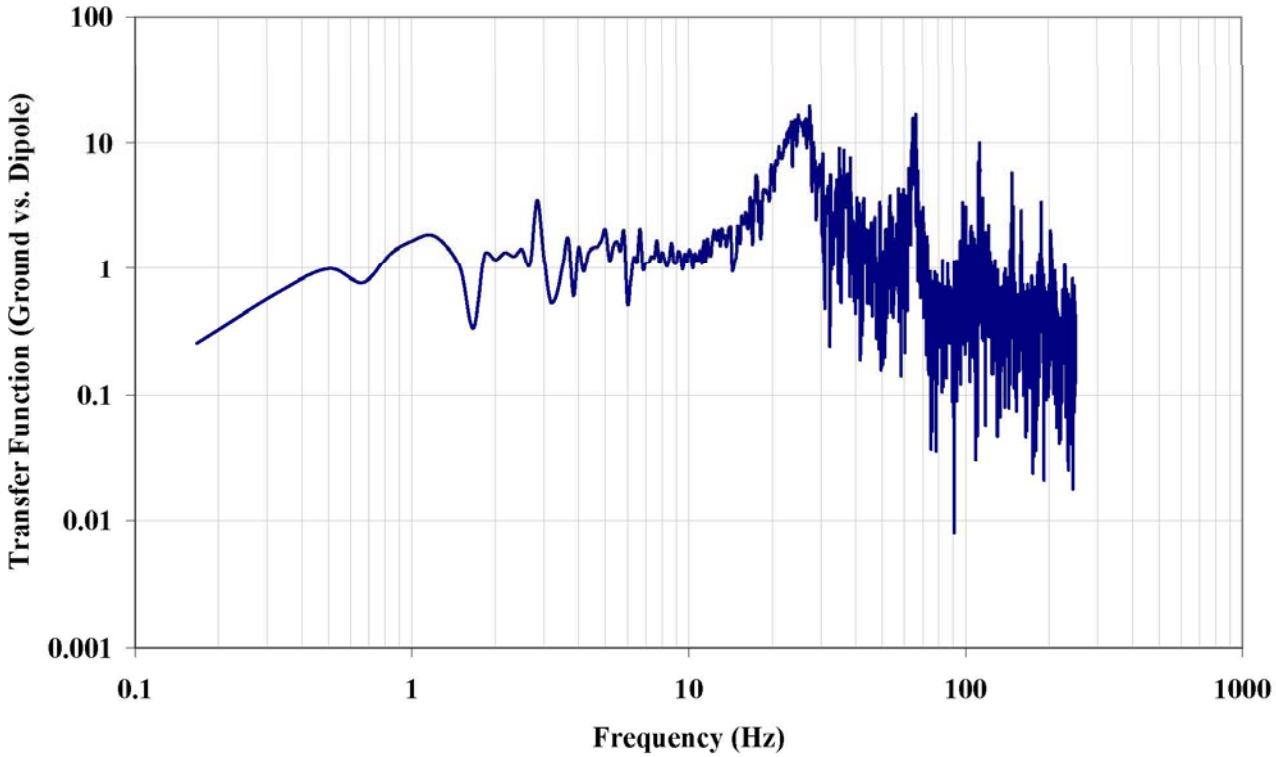

The configuration is 6-point support set up but with no vertical fixation. The most dominant frequency is @ 28 Hz due to the rocking mode of the whole girder structure on the floor.

Horizontal transverse transfer functions of girder top versus pedestal platform, girder top versus floor and pedestal platform versus floor

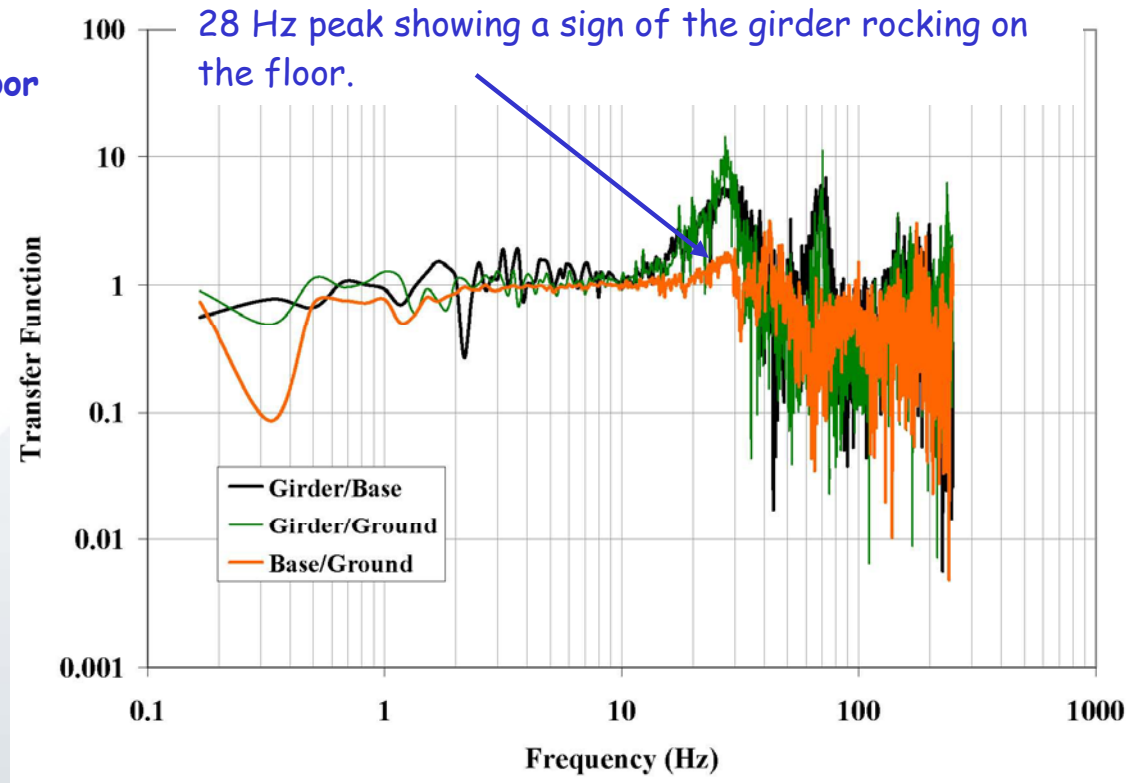

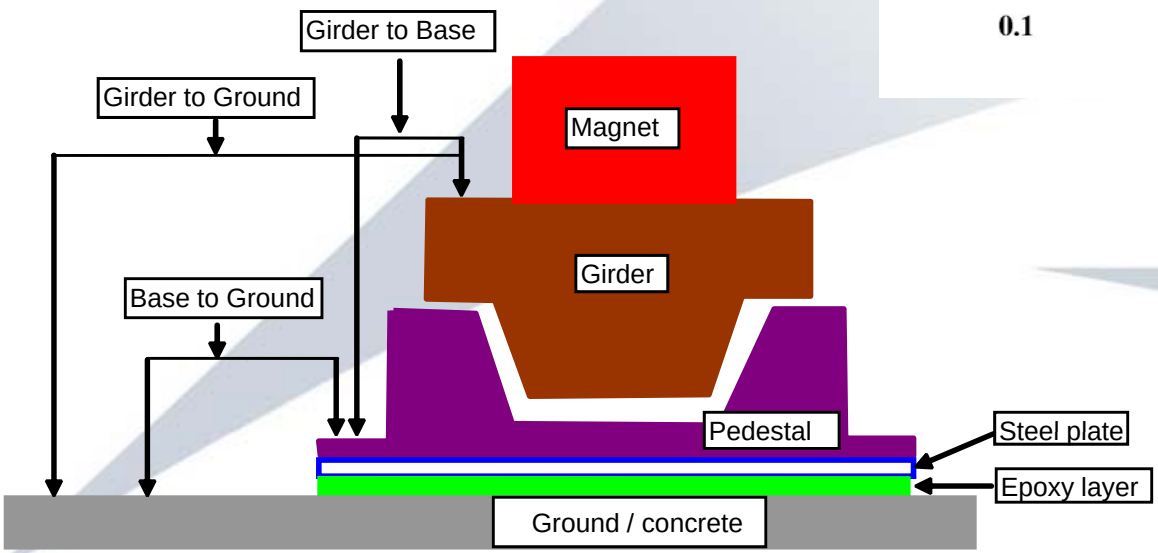

Crosscheck twist mode predicted by ANSYS

Horizontal geophones placed on extreme corners of the girder surface

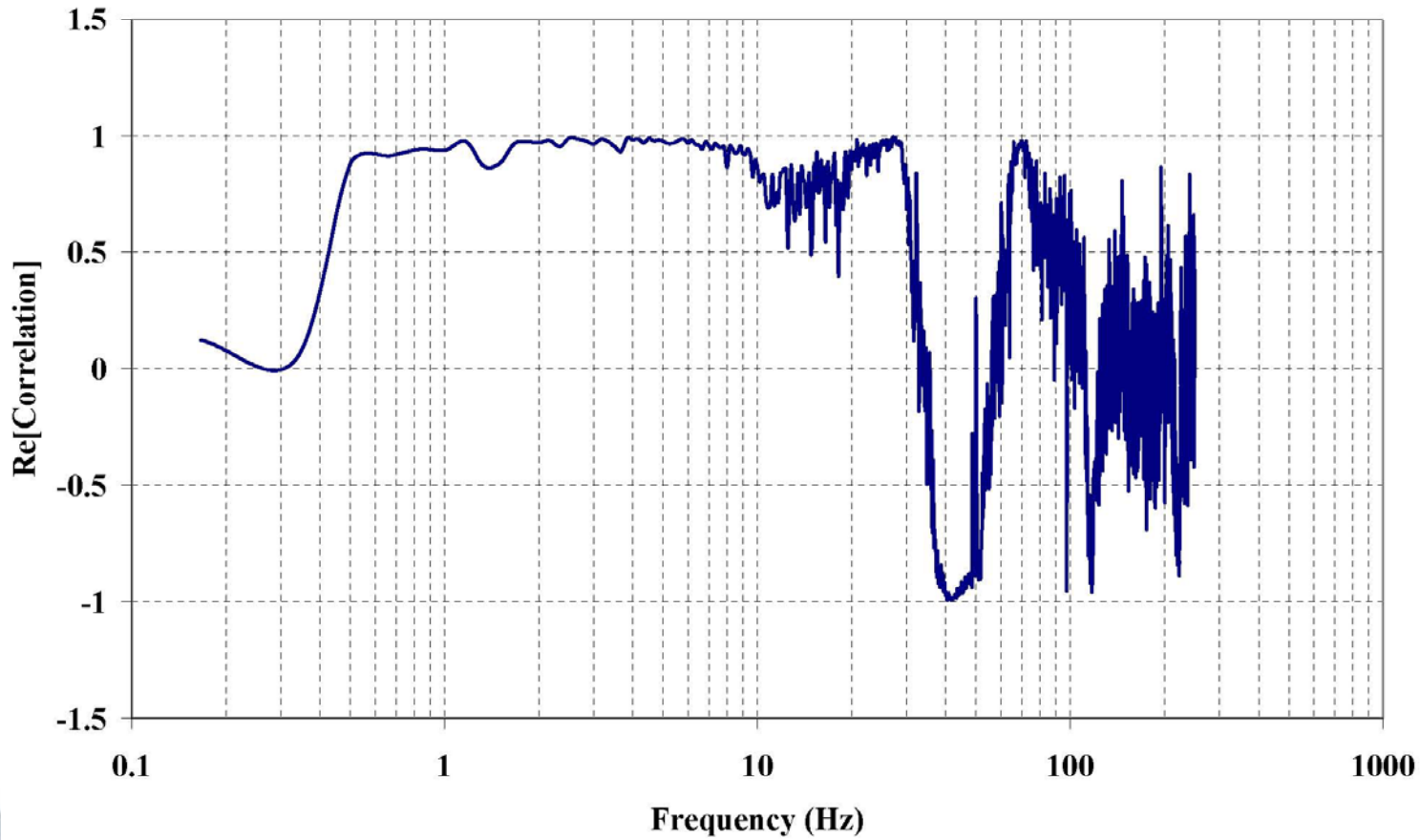

The twist mode is clearly seen @ 40 Hz, lower than the value calculated (64 Hz). This could be due to the effect of the pedestal-floor simulation assumptions.

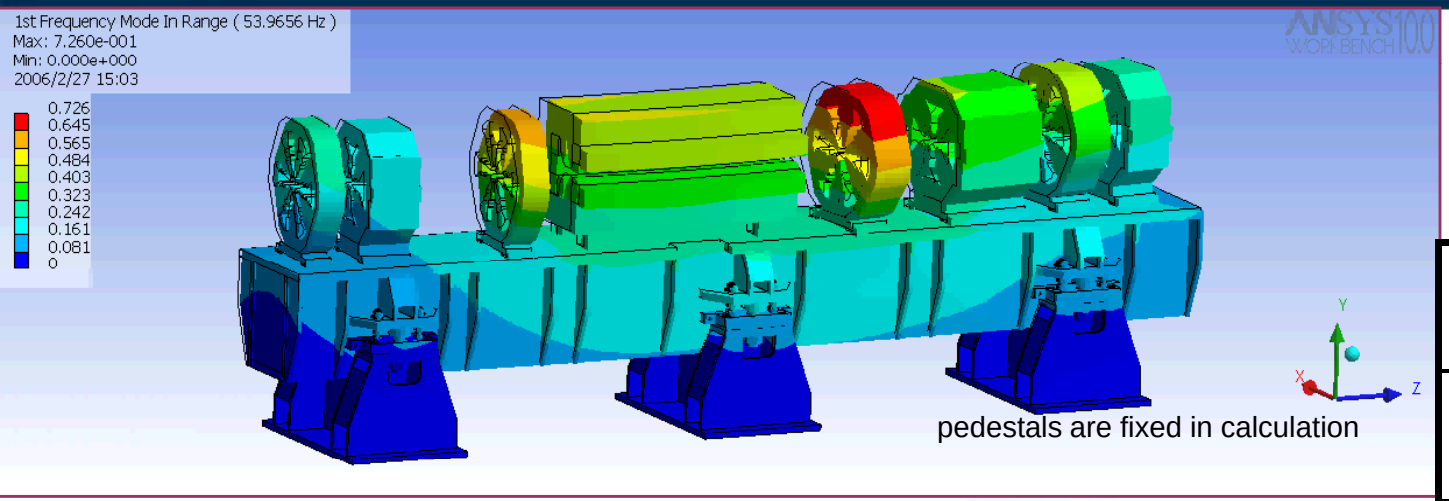

1st mode - frequency 54 Hz (rotation around longitudinal axis (rocking mode)

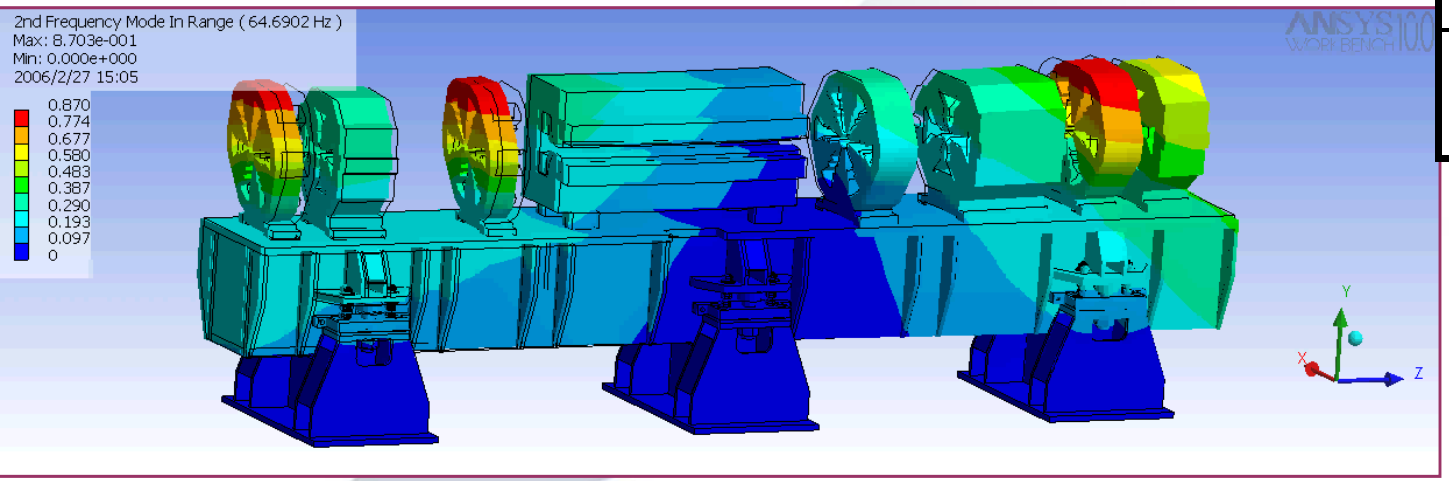

2nd mode - frequency 65Hz (twist)

Vibration measurements versus simulation

	1 MODE ROCKING	2 MODE TWIST
IDIADA	26 Hz	39 Hz
DESY	28 Hz	40 Hz
CALCULATION	54 Hz	65 Hz

Discrepancy due to the interface between pedestal base plate to floor.

CONCLUSIONS

- ALBA SR girder system design has been presented.
- The design has been crosschecked through prototyping and measurements of the vibrational response.
- Vertical vibrational girder system response good. Transfer function 1 up to 40Hz.
- Horizontal transverse girder response acceptable. Transfer function 10 at 28 Hz.
- Discrepancies on the base plate to ground simulation assumptions have been identified.
- The production process has been crosschecked through prototyping.
- Improvements have been successfully introduced in the manufacturing facilities, milling machine and process.
- The first production girders are inside specified tolerances.