Vibration Simulations For SESAME Magnets Girder Assembly

M. SHEHAB

Outline

- Introduction
- Girder System Design Proposals
- FEA Analysis
- Discussion
- Conclusion

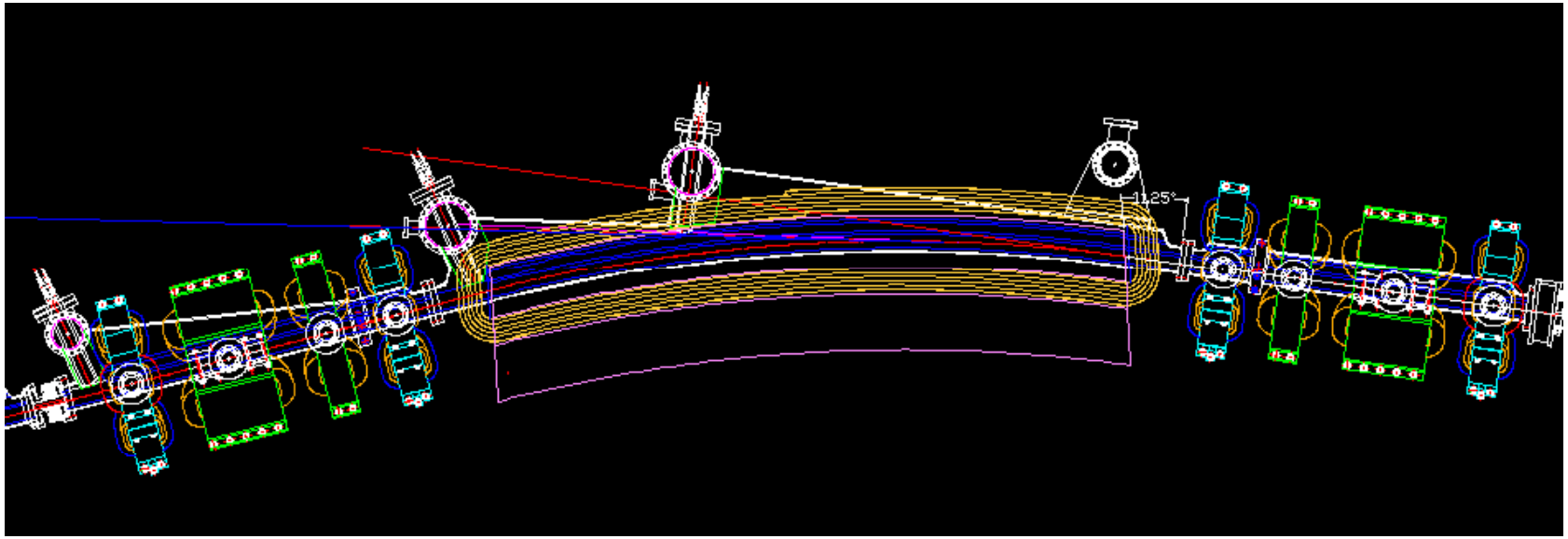

Standard H. Cell

Girder System Design Proposals

- Initial Proposal (ANKA) Design

-Two Types (dipole, Multiples Girder)

- Second Proposal (ALBA Type)

-Case 1: 2 Pedestal Support

-Case 2: 3 Pedestals Support

Initial Proposal (ANKA) Design

Configuration

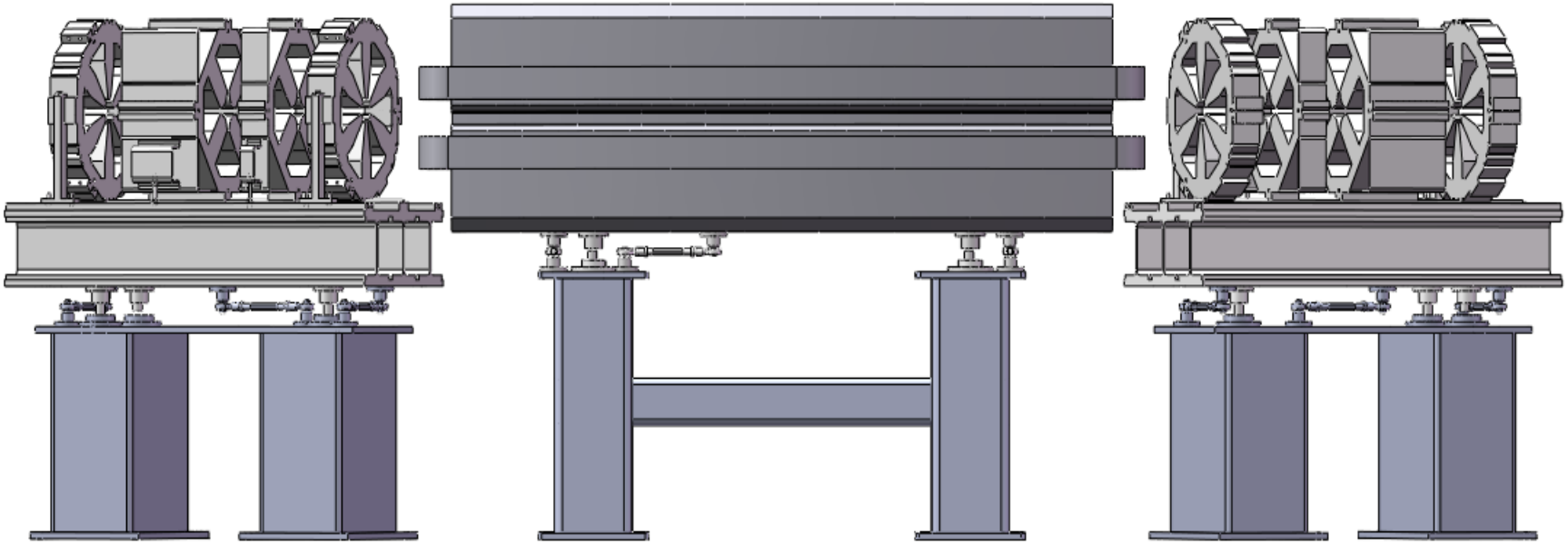

Second Proposal (ALBA Type P2C2)

Configuration

- All the Magnets Being Placed on The Same Pad.
- Beam Height 1.4 m
- Original Multi-poles Design Has Been Changed -Magnets Base To Center Distance increased from (292mm) to (420mm).

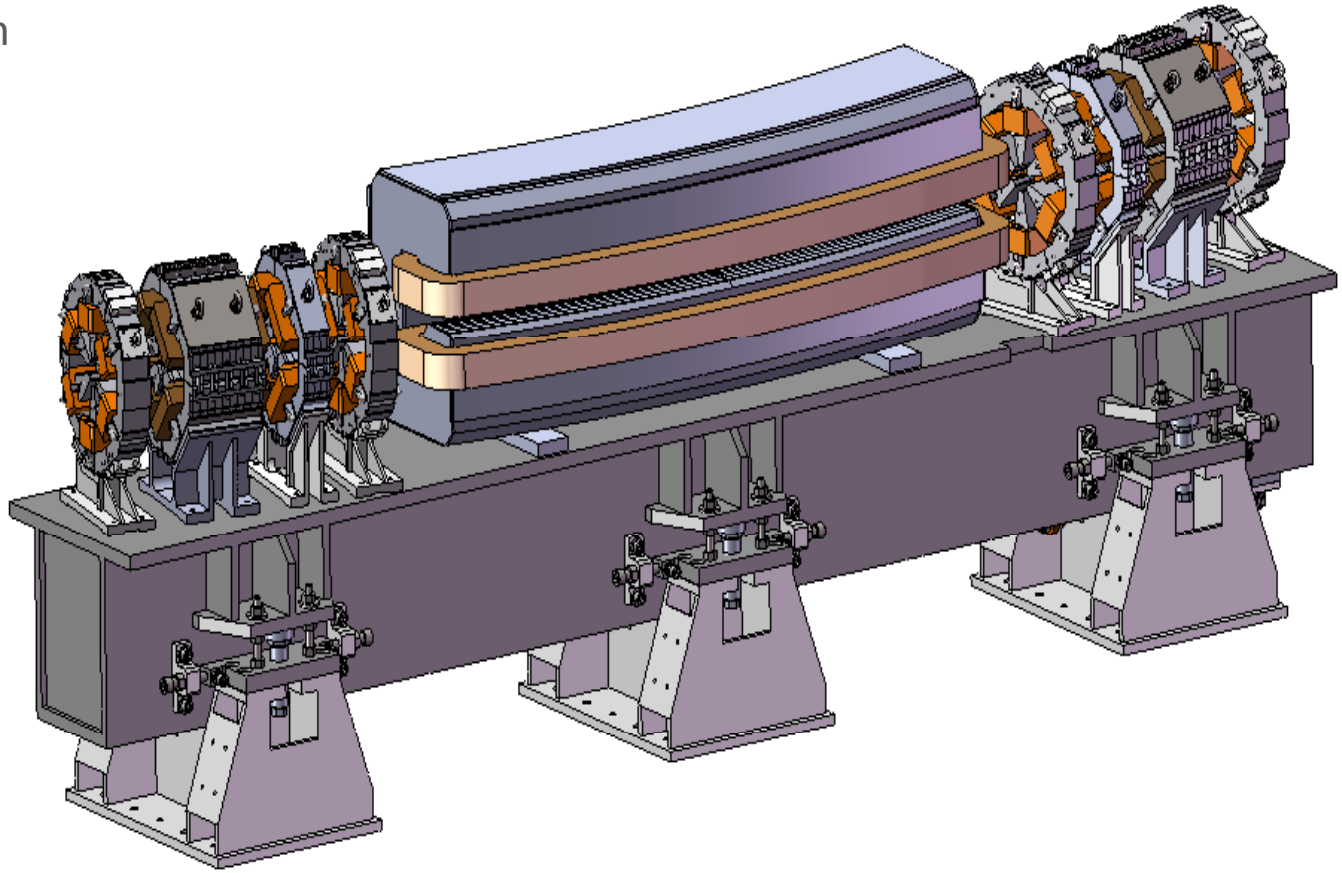

-3 Struts System
-6 Vertical Jacks Supports
-Fixations in H. Plane

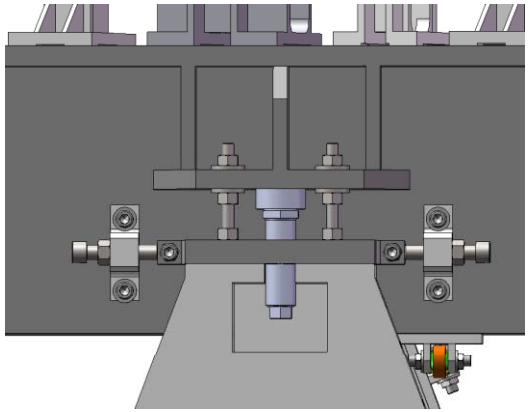

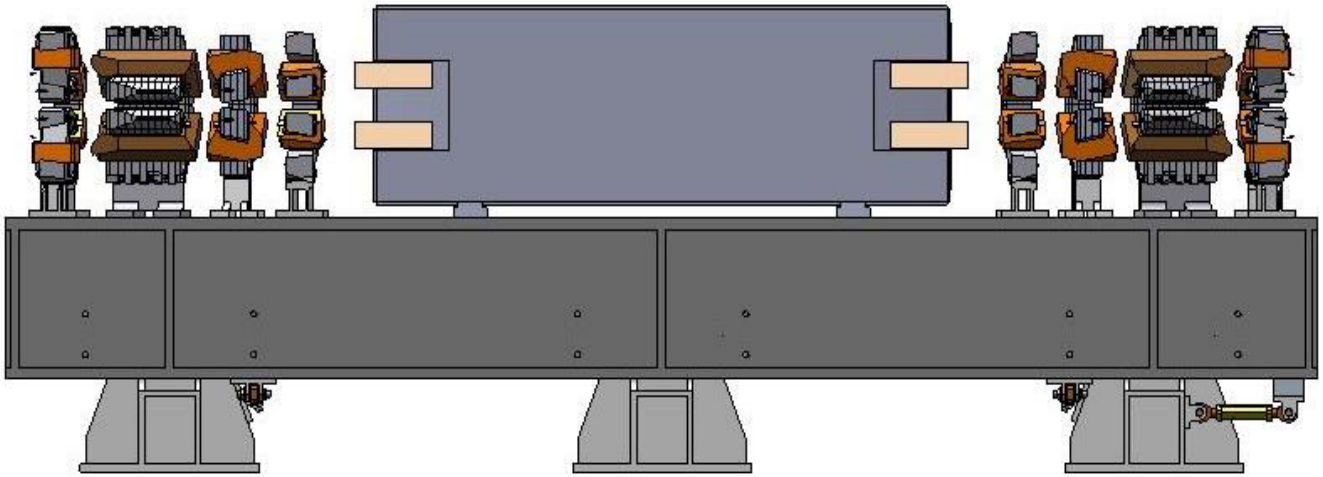

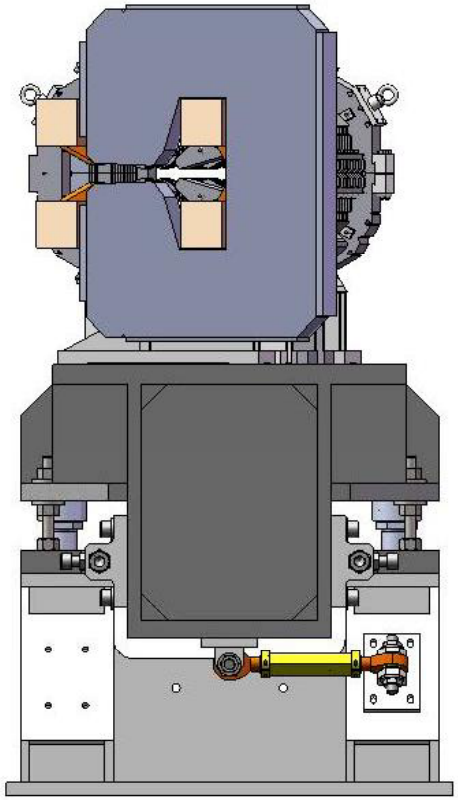

STATIC ANALYSIS

Girder Type	Static Deformation
P1A	20 µm
P1B	15 µm
P2C1	34 µm
P2C2	25 µm

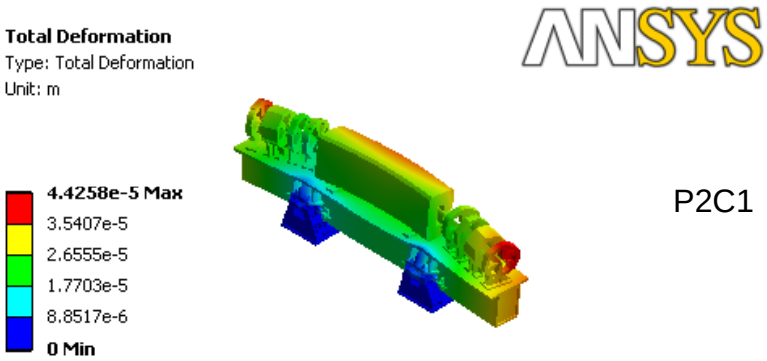

P2C1

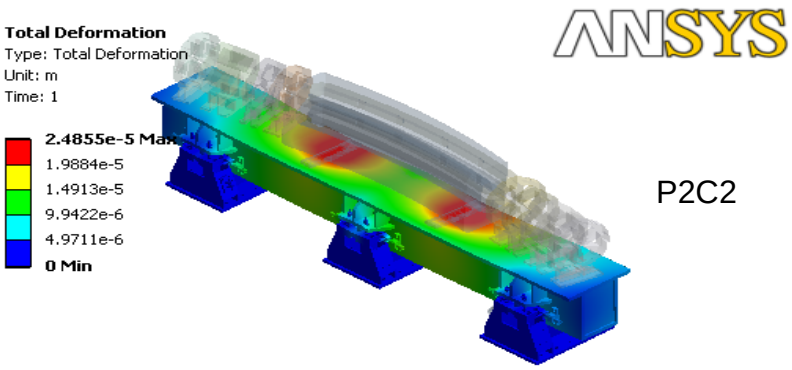

P2C2

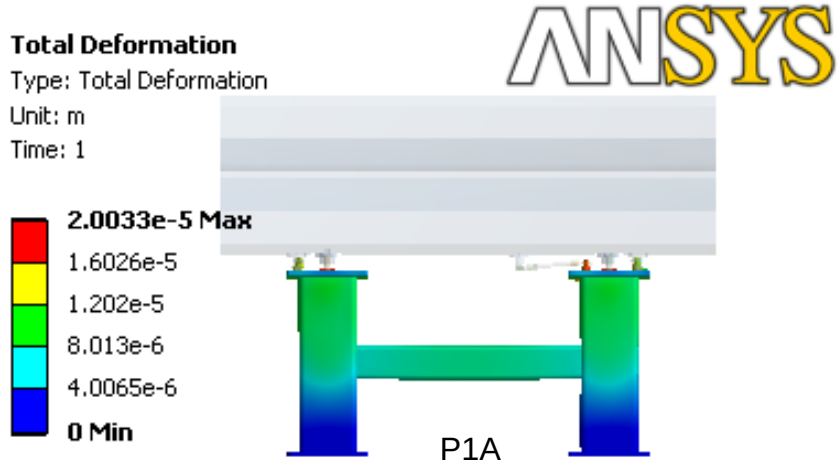

P1A

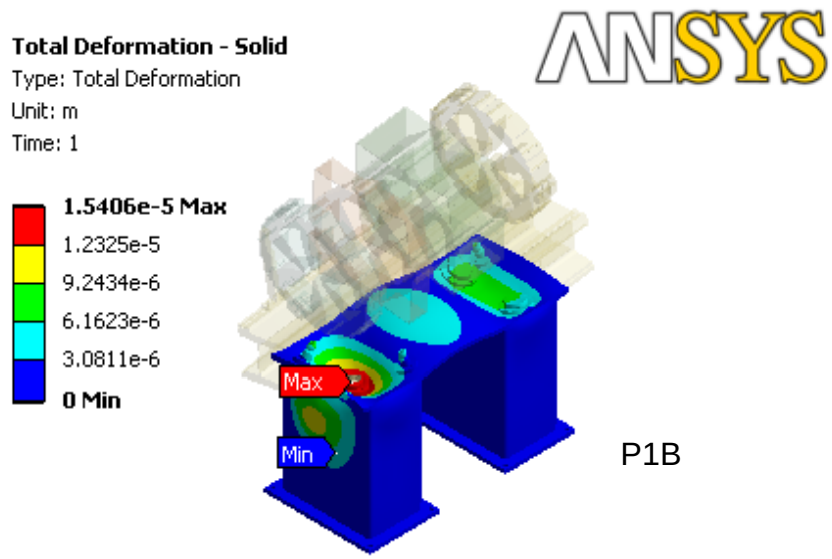

P1B

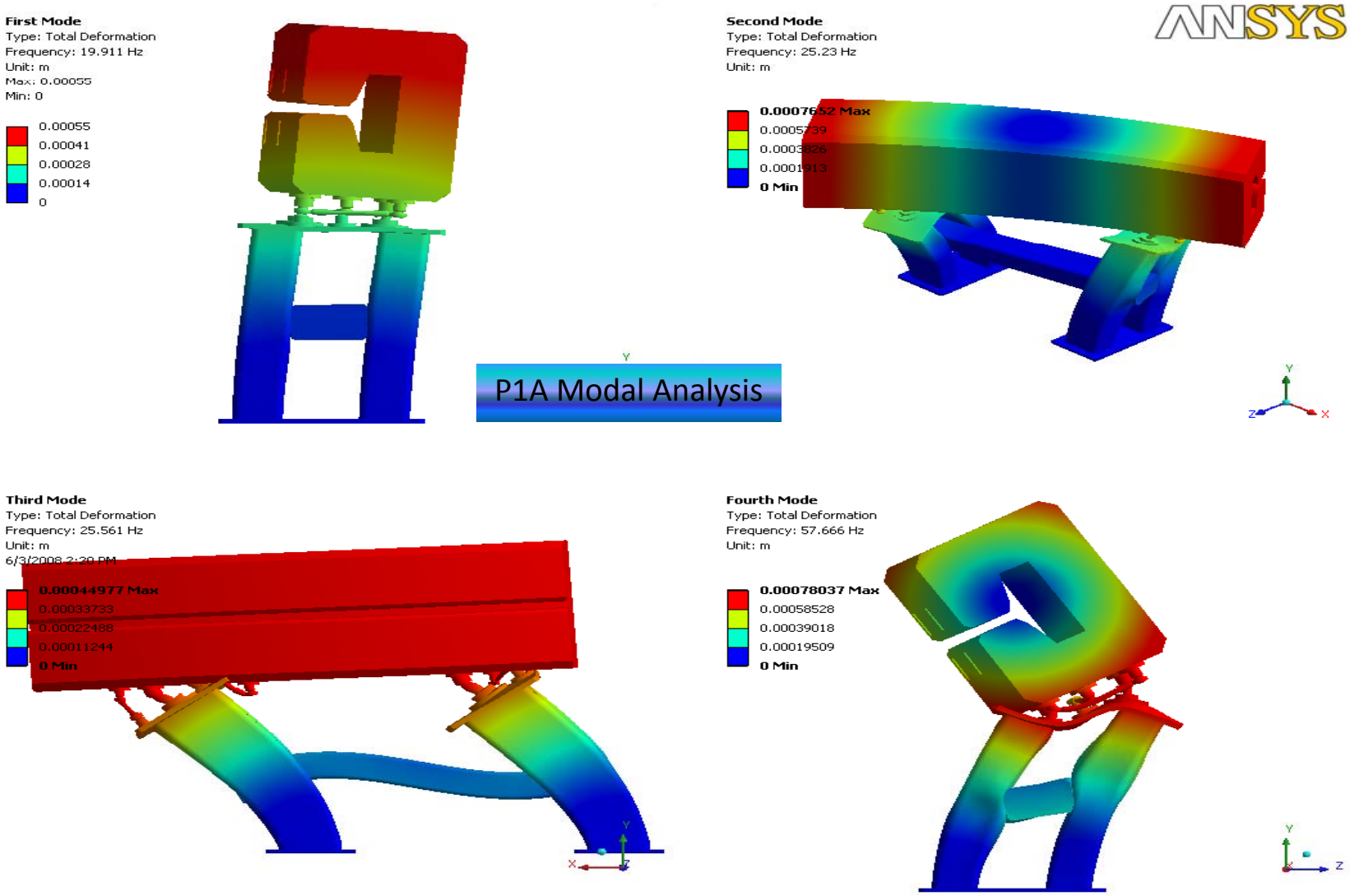
First Mode
Type: Total Deformation
Frequency: 19.911 Hz
Unit: m
Max: 0.00055
Min: 0
0.00055
0.00041
0.00028
0.00014
0
Second Mode
Type: Total Deformation
Frequency: 25.23 Hz
Unit: m
0.0007652 Max
0.0005739
0.0003826
0.0001913
0 Min
ANSYS
P1A Modal Analysis
Third Mode
Type: Total Deformation
Frequency: 25.561 Hz
Unit: m
0.00044977 Max
0.00033733
0.00022488
0.00011244
0 Min
Fourth Mode
Type: Total Deformation
Frequency: 57.666 Hz
Unit: m
0.00078037 Max
0.00058528
0.00039018
0.00019509
0 Min

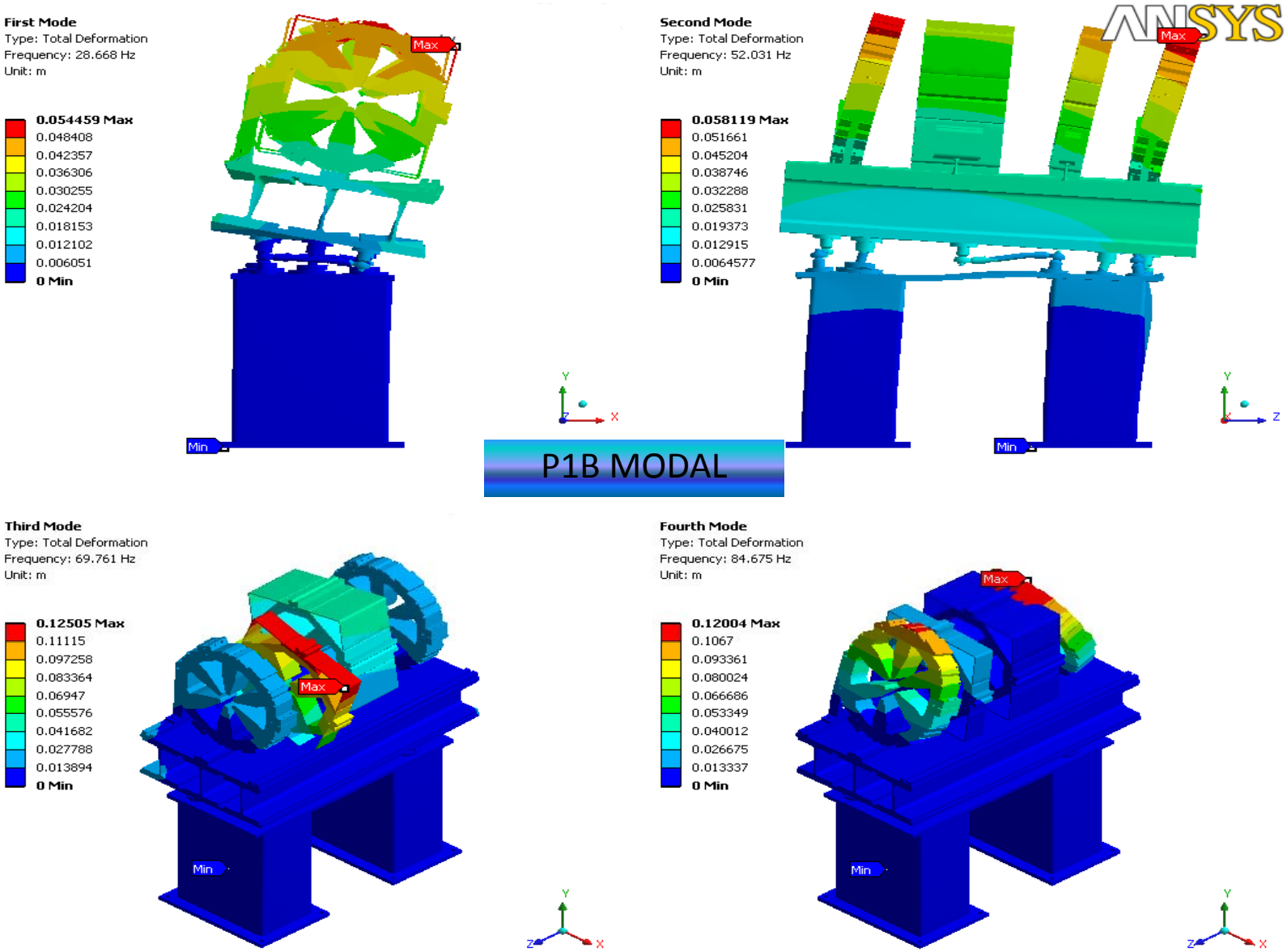
First Mode
Type: Total Deformation
Frequency: 28.668 Hz
Unit: m
0.054459 Max
0.048408
0.042357
0.036306
0.030255
0.024204
0.018153
0.012102
0.006051
0 Min
Max
Min
Second Mode
Type: Total Deformation
Frequency: 52.031 Hz
Unit: m
0.058119 Max
0.051661
0.045204
0.038746
0.032288
0.025831
0.019373
0.012915
0.0064577
0 Min
ANSYS
Max
Min
P1B MODAL
Third Mode
Type: Total Deformation
Frequency: 69.761 Hz
Unit: m
0.12505 Max
0.11115
0.097258
0.083364
0.06947
0.055576
0.041682
0.027788
0.013894
0 Min
Max
Min
Fourth Mode
Type: Total Deformation
Frequency: 84.675 Hz
Unit: m
0.12004 Max
0.1067
0.093361
0.080024
0.066686
0.053349
0.040012
0.026675
0.013337
0 Min
Max
Min

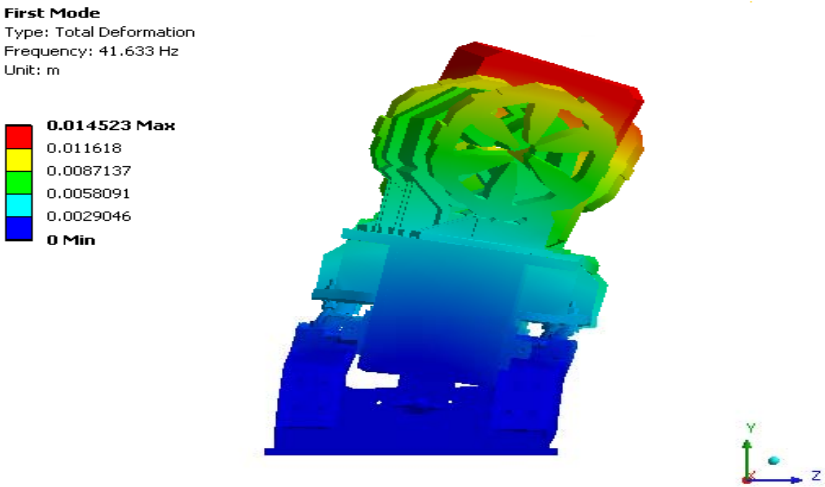
First Mode
Type: Total Deformation
Frequency: 41.633 Hz
Unit: m
0.014523 Max
0.011618
0.0087137
0.0058091
0.0029046
0 Min

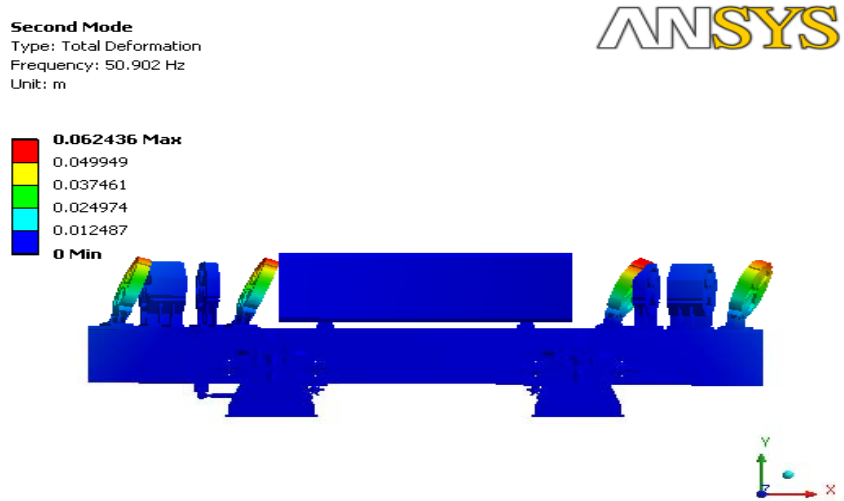
Second Mode
Type: Total Deformation
Frequency: 50.902 Hz
Unit: m
0.062436 Max
0.049949
0.037461
0.024974
0.012487
0 Min

P2C1 MODAL

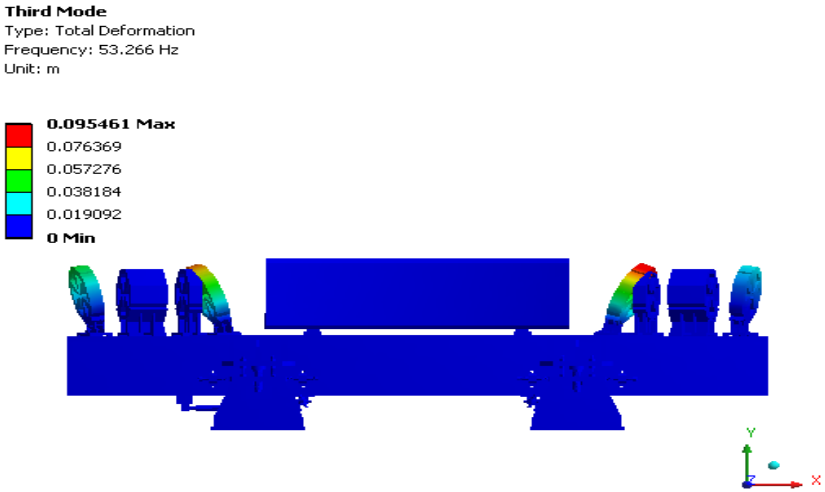
Third Mode
Type: Total Deformation
Frequency: 53.266 Hz
Unit: m
0.095461 Max
0.076369
0.057276
0.038184
0.019092
0 Min

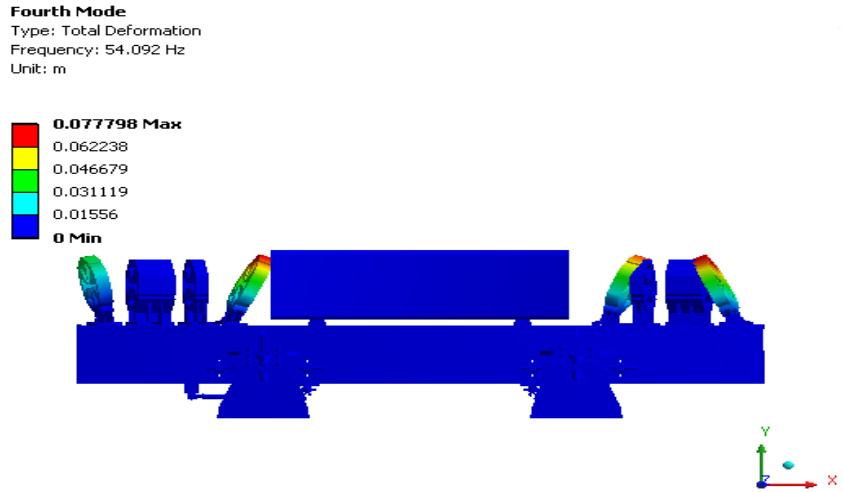
Fourth Mode
Type: Total Deformation
Frequency: 54.092 Hz
Unit: m
0.077798 Max
0.062238
0.046679
0.031119
0.01556
0 Min

P2C2 MODAL

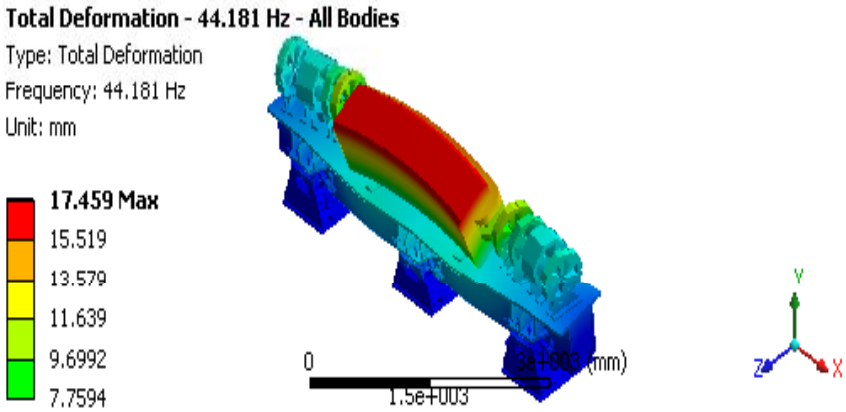
Total Deformation - 44.181 Hz - All Bodies
Type: Total Deformation
Frequency: 44.181 Hz
Unit: mm
17.459 Max
15.519
13.579
11.639
9.6992
7.7594
0
1.5e+003
3e+003 (mm)
Y
Z
X

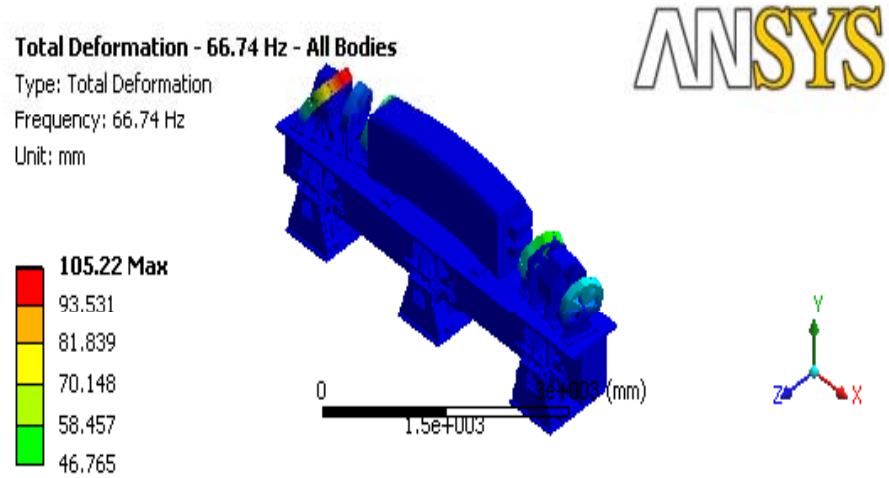
Total Deformation - 66.74 Hz - All Bodies
Type: Total Deformation
Frequency: 66.74 Hz
Unit: mm
105.22 Max
93.531
81.839
70.148
58.457
46.765
0
1.5e+003
3e+003 (mm)
Y
Z
X

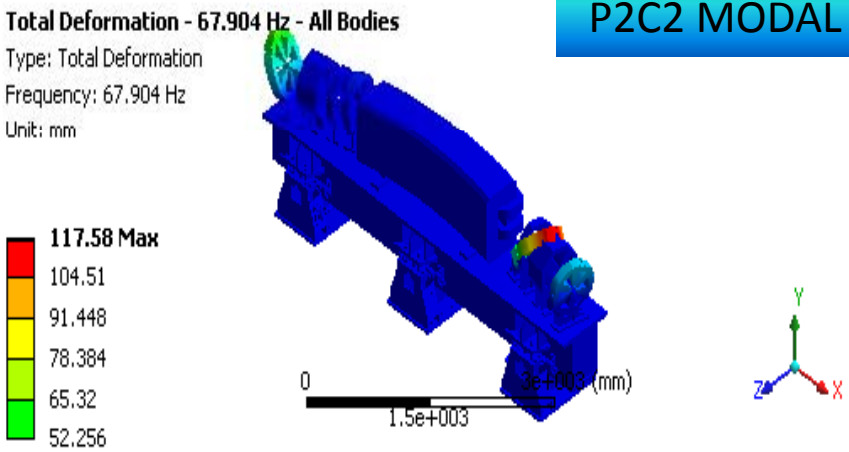
Total Deformation - 67.904 Hz - All Bodies
Type: Total Deformation
Frequency: 67.904 Hz
Unit: mm
117.58 Max
104.51
91.448
78.384
65.32
52.256
0
1.5e+003
3e+003 (mm)
Y
Z
X

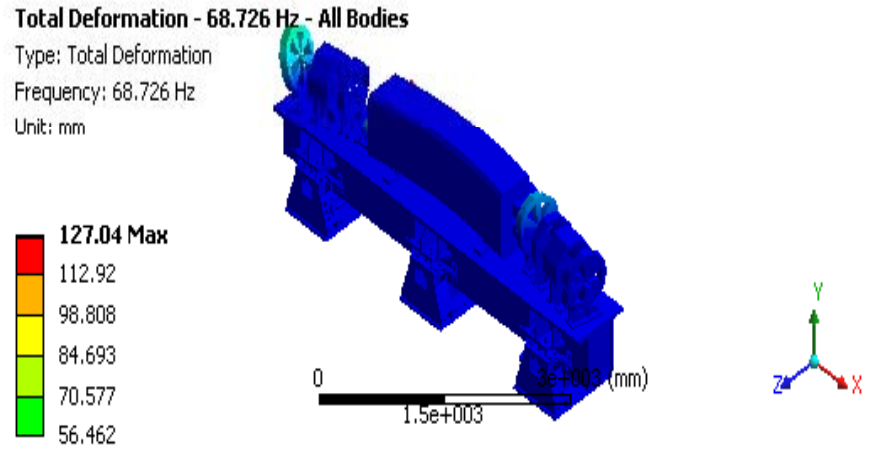
Total Deformation - 68.726 Hz - All Bodies
Type: Total Deformation
Frequency: 68.726 Hz
Unit: mm
127.04 Max
112.92
98.808
84.693
70.577
56.462
0
1.5e+003
3e+003 (mm)
Y
Z
X

PSD Vertical Base Excitation

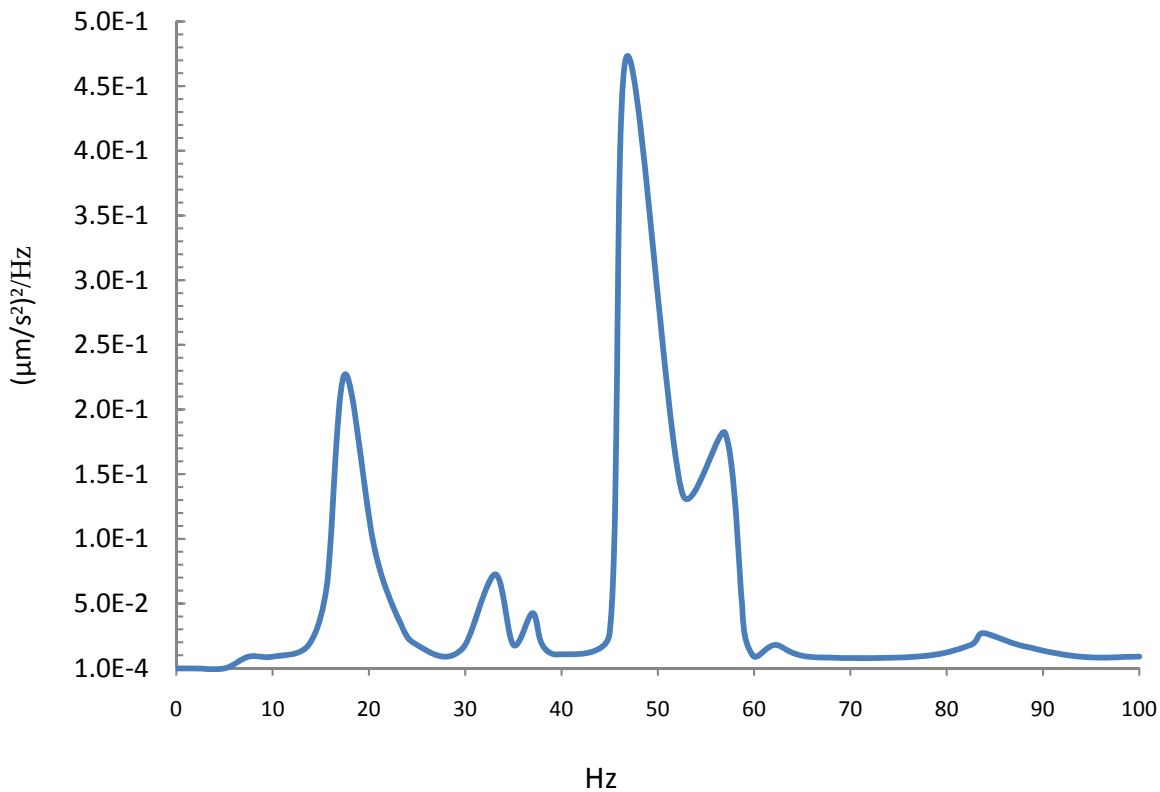

Vertical PSD measurements at Daresbury Site

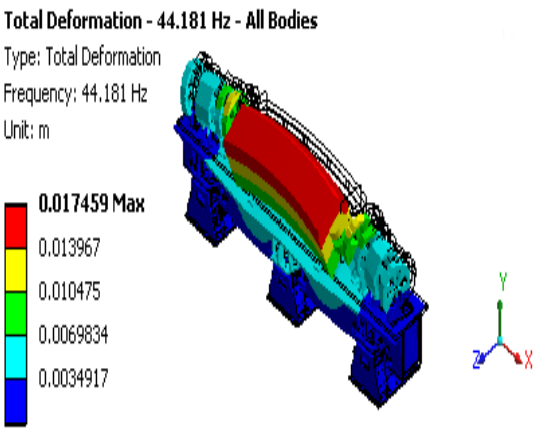
Total Deformation - 44.181 Hz - All Bodies
Type: Total Deformation
Frequency: 44.181 Hz
Unit: m
0.017459 Max
0.013967
0.010475
0.0069834
0.0034917

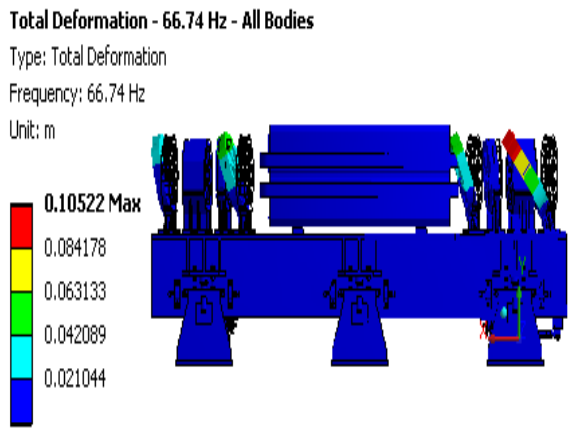
Total Deformation - 66.74 Hz - All Bodies
Type: Total Deformation
Frequency: 66.74 Hz
Unit: m
0.10522 Max
0.084178
0.063133
0.042089
0.021044

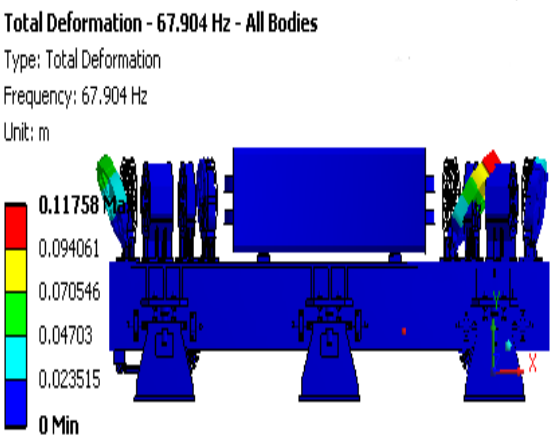
Total Deformation - 67.904 Hz - All Bodies
Type: Total Deformation
Frequency: 67.904 Hz
Unit: m
0.11758 Max
0.094061
0.070546
0.04703
0.023515
0 Min

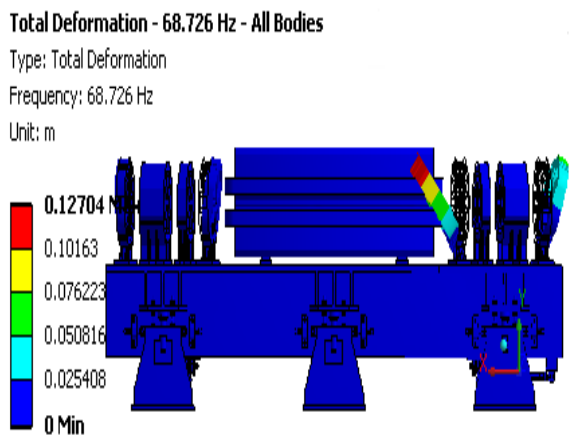
Total Deformation - 68.726 Hz - All Bodies
Type: Total Deformation
Frequency: 68.726 Hz
Unit: m
0.12704 Max
0.10163
0.076223
0.050816
0.025408
0 Min

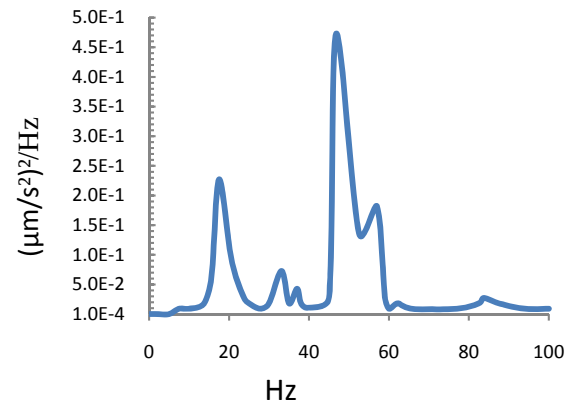
(µm/s²)²/Hz
5.0E-1
4.5E-1
4.0E-1
3.5E-1
3.0E-1
2.5E-1
2.0E-1
1.5E-1
1.0E-1
5.0E-2
1.0E-4
0
20
40
60
80
100
Hz

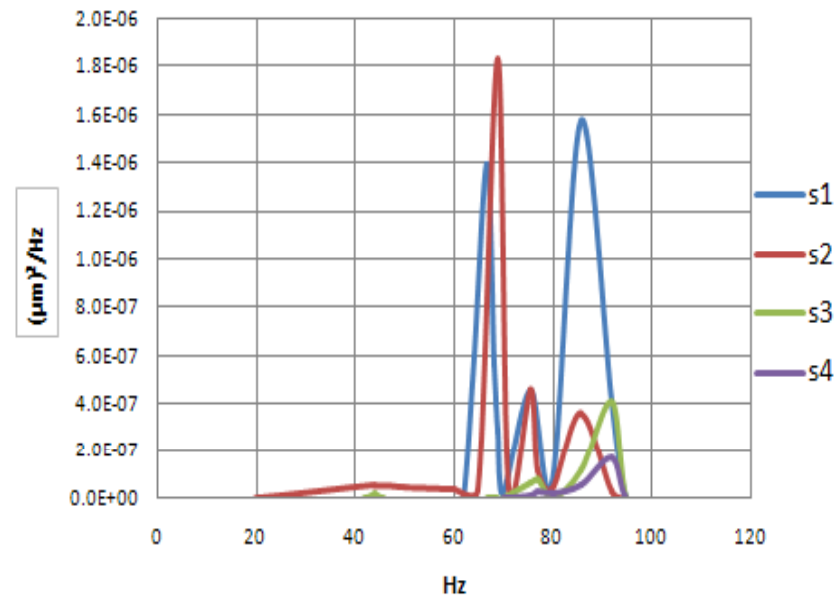
(µm)²/Hz
2.0E-06
1.8E-06
1.6E-06
1.4E-06
1.2E-06
1.0E-06
8.0E-07
6.0E-07
4.0E-07
2.0E-07
0.0E+00
0
20
40
60
80
100
120
Hz
s1
s2
s3
s4

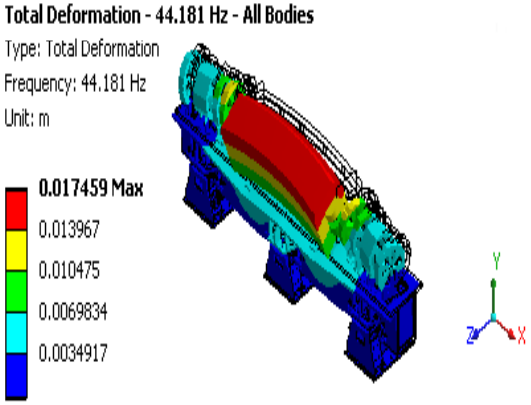
Total Deformation - 44.181 Hz - All Bodies
Type: Total Deformation
Frequency: 44.181 Hz
Unit: m
0.017459 Max
0.013967
0.010475
0.0069834
0.0034917

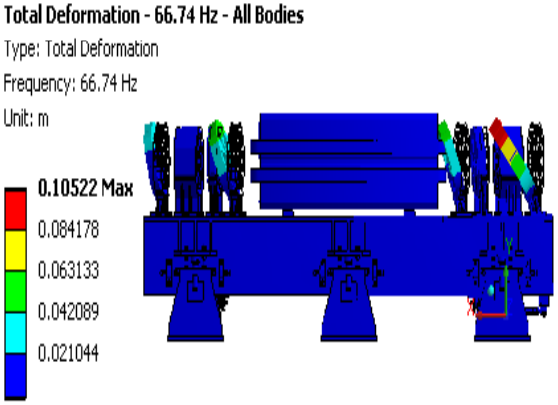
Total Deformation - 66.74 Hz - All Bodies
Type: Total Deformation
Frequency: 66.74 Hz
Unit: m
0.10522 Max
0.084178
0.063133
0.042089
0.021044

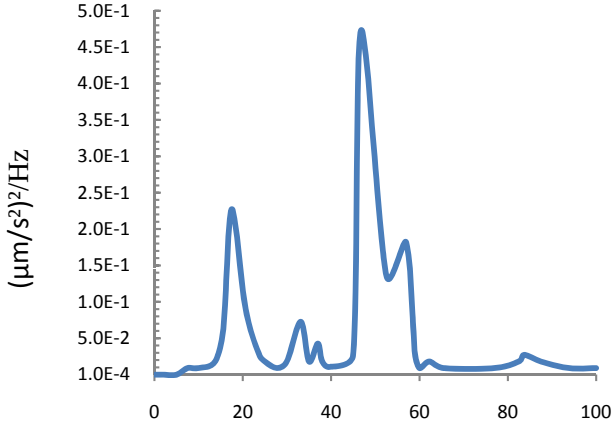
(µm/s²)²/Hz
5.0E-1
4.5E-1
4.0E-1
3.5E-1
3.0E-1
2.5E-1
2.0E-1
1.5E-1
1.0E-1
5.0E-2
1.0E-4
0
20
40
60
80
100

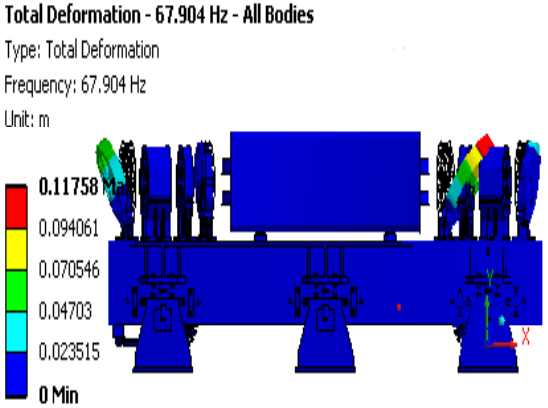
Total Deformation - 67.904 Hz - All Bodies
Type: Total Deformation
Frequency: 67.904 Hz
Unit: m
0.11758 Max
0.094061
0.070546
0.04703
0.023515
0 Min

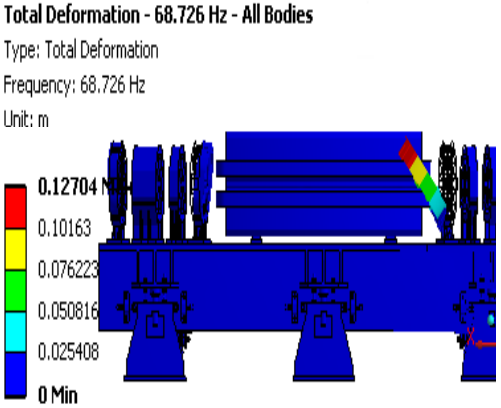
Total Deformation - 68.726 Hz - All Bodies
Type: Total Deformation
Frequency: 68.726 Hz
Unit: m
0.12704 Max
0.10163
0.076223
0.050816
0.025408
0 Min

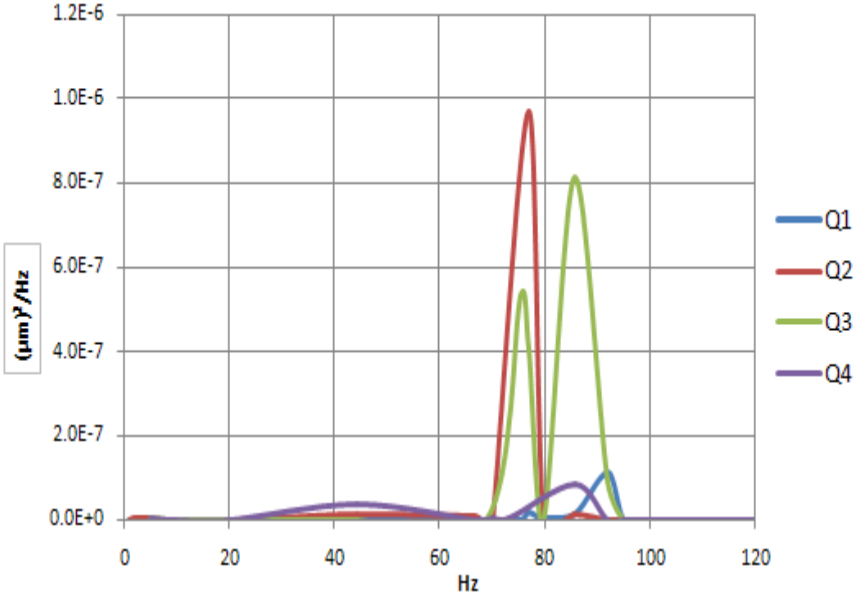
(µm)²/Hz
1.2E-6
1.0E-6
8.0E-7
6.0E-7
4.0E-7
2.0E-7
0.0E+0
0
20
40
60
80
100
120
Hz
Q1
Q2
Q3
Q4

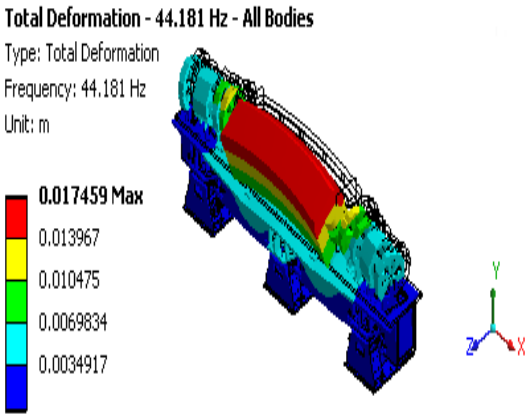
Total Deformation - 44.181 Hz - All Bodies
Type: Total Deformation
Frequency: 44.181 Hz
Unit: m
0.017459 Max
0.013967
0.010475
0.0069834
0.0034917

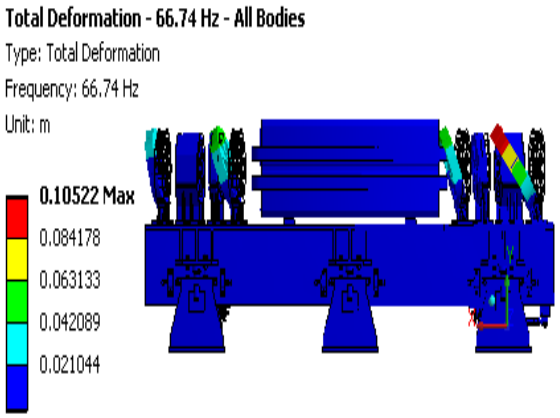
Total Deformation - 66.74 Hz - All Bodies
Type: Total Deformation
Frequency: 66.74 Hz
Unit: m
0.10522 Max
0.084178
0.063133
0.042089
0.021044

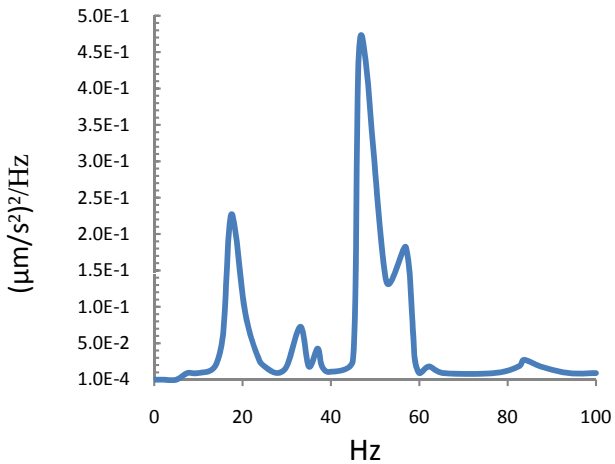
5.0E-1
4.5E-1
4.0E-1
3.5E-1
3.0E-1
2.5E-1
2.0E-1
1.5E-1
1.0E-1
5.0E-2
1.0E-4
(µm/s²)²/Hz
0
20
40
60
80
100
Hz

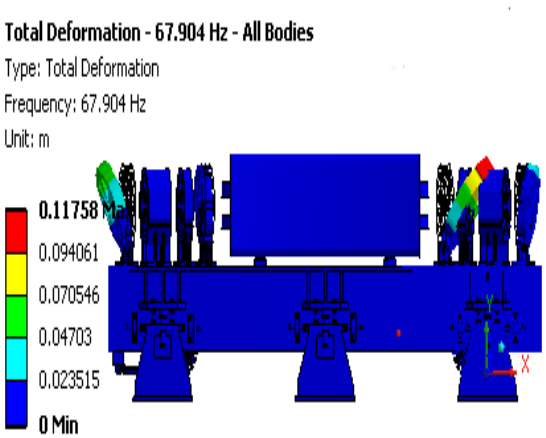
Total Deformation - 67.904 Hz - All Bodies
Type: Total Deformation
Frequency: 67.904 Hz
Unit: m
0.11758 Max
0.094061
0.070546
0.04703
0.023515
0 Min

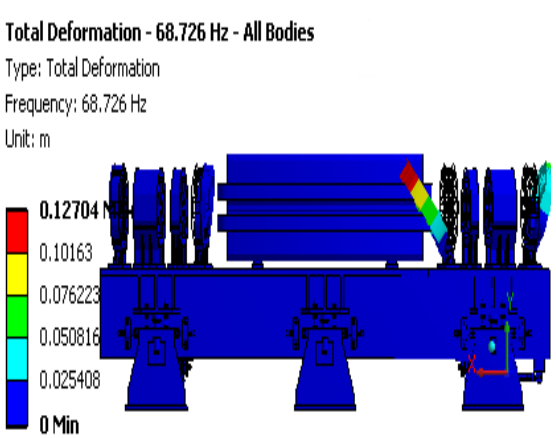
Total Deformation - 68.726 Hz - All Bodies
Type: Total Deformation
Frequency: 68.726 Hz
Unit: m
0.12704 Max
0.10163
0.076223
0.050816
0.025408
0 Min

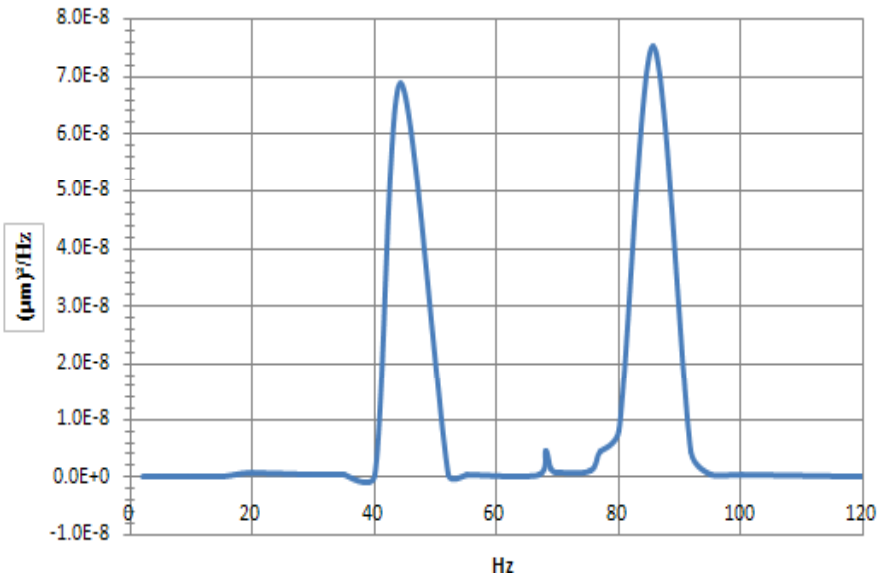
8.0E-8
7.0E-8
6.0E-8
5.0E-8
4.0E-8
3.0E-8
2.0E-8
1.0E-8
0.0E+0
-1.0E-8
(µm)²/Hz
0
20
40
60
80
100
120
Hz

PSD Response To Vertical Base Excitation

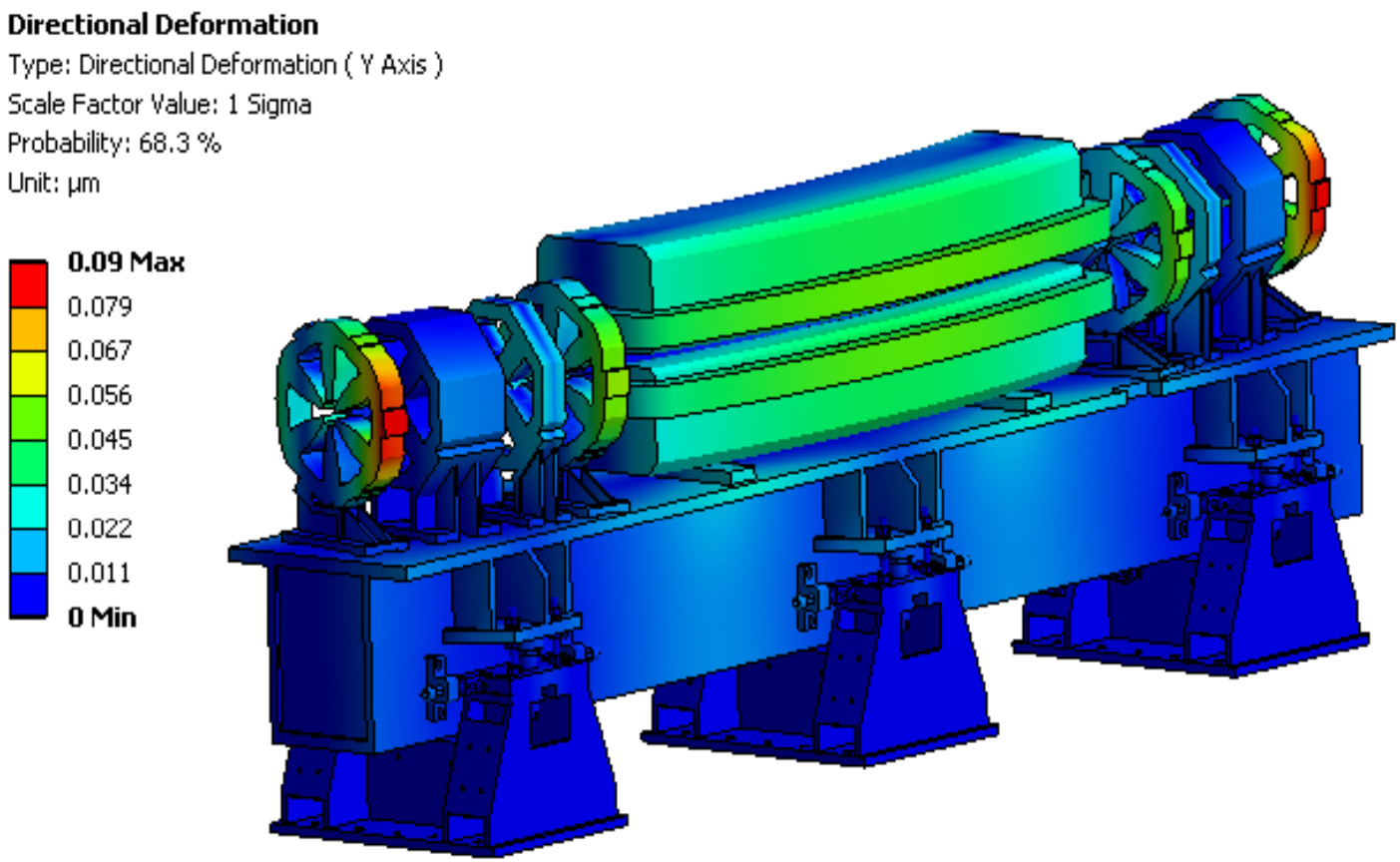

Vertical Displacement of Magnets Subjected to 1E-8 g^2/Hz PSD Base Excitation

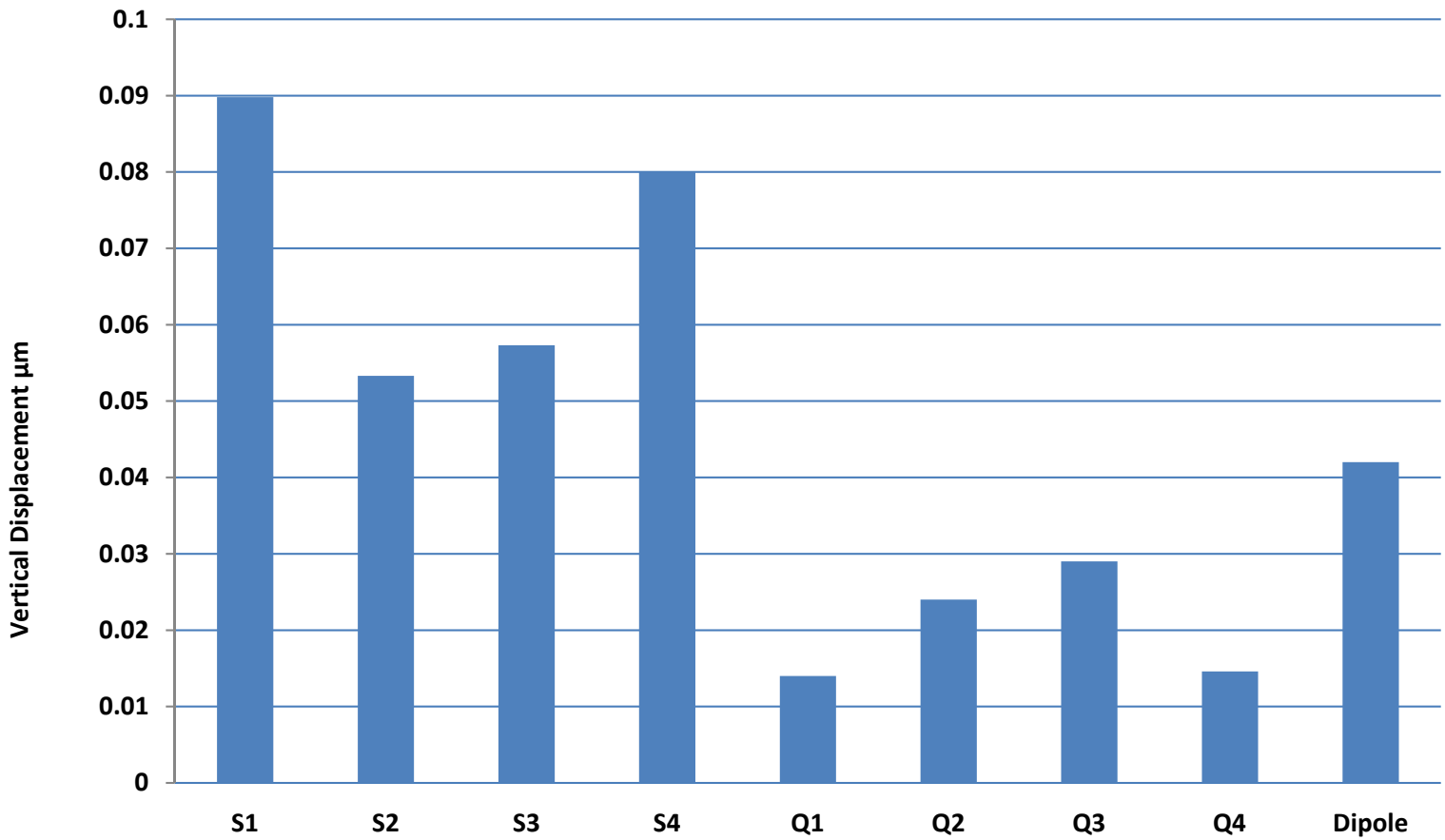

- Future Work