Mitglied der Helmholtz-Gemeinschaft

JÜLICH
FORSCHUNGSZENTRUM

1.25MHz Light Chopper Dedicated for Operation at BESSY

Bernd Lindenau, Franz Janssen, Marko Leyendecker

Forschungszentrum Juelich GmbH (FZJ)
Central Department of Technology
52425 Juelich, Germany

MEDSI/Pan-American SRI 2008 Meeting
June 10-13, 2008

1.25MHz light chopper dedicated for operation at BESSY

introduction	beamline requirements background of the chopper design
the chopper	details of the rotor bearing housing features rotor design slot geometry
conclusion	status of the development

The task

J.Kirschner, C.Winkler
Max Plank Institute of Microstructure Physics
Halle, Germany

Electron coincidence spectroscopy from surfaces
with photon beam <50eV

Experiments at BESSY - 3rd generation synchrotron radiation facility in Berlin,Germany

Operation modes:

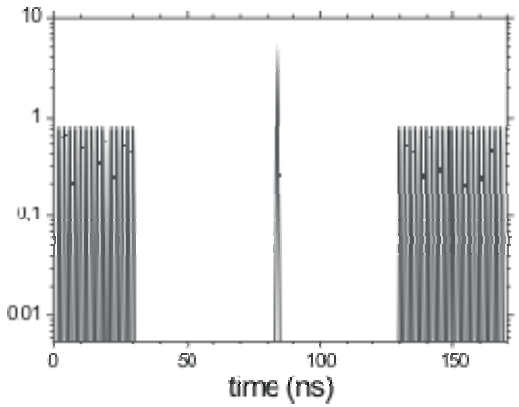

Multi Bunch Hybrid Mode

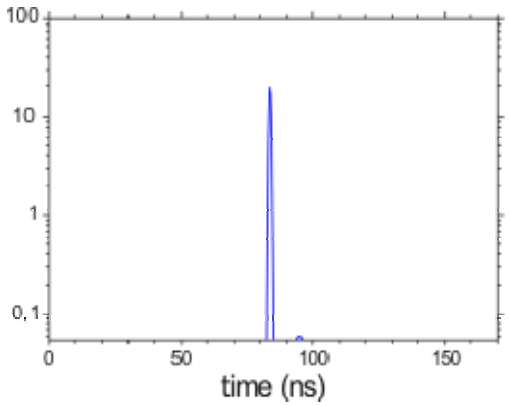

Single Bunch Operation

Isolation of the single bunch from an optional 200ns gap at each 800ns cycle
i.e.
development of a 1.25MHz chopper

Principal shutter designs

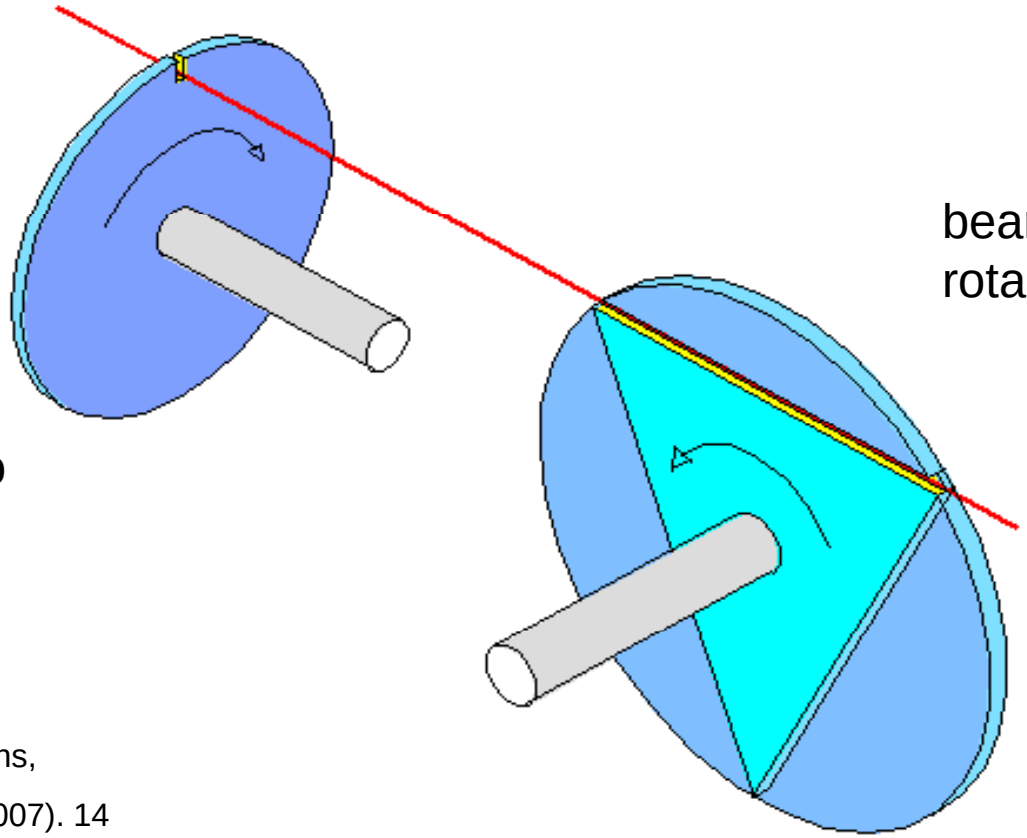

beam perpendicular to rotary axis

beam parallel to rotary axis

M.Gembicky, P.Coppens,

J.Synchrotron Rad. (2007). 14

1kHz/ 3kHz shutter rotor for white beam application

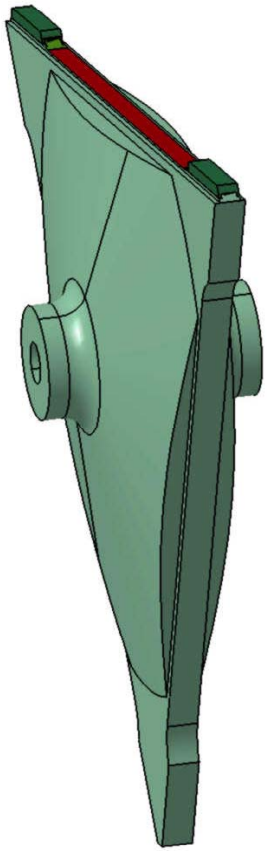

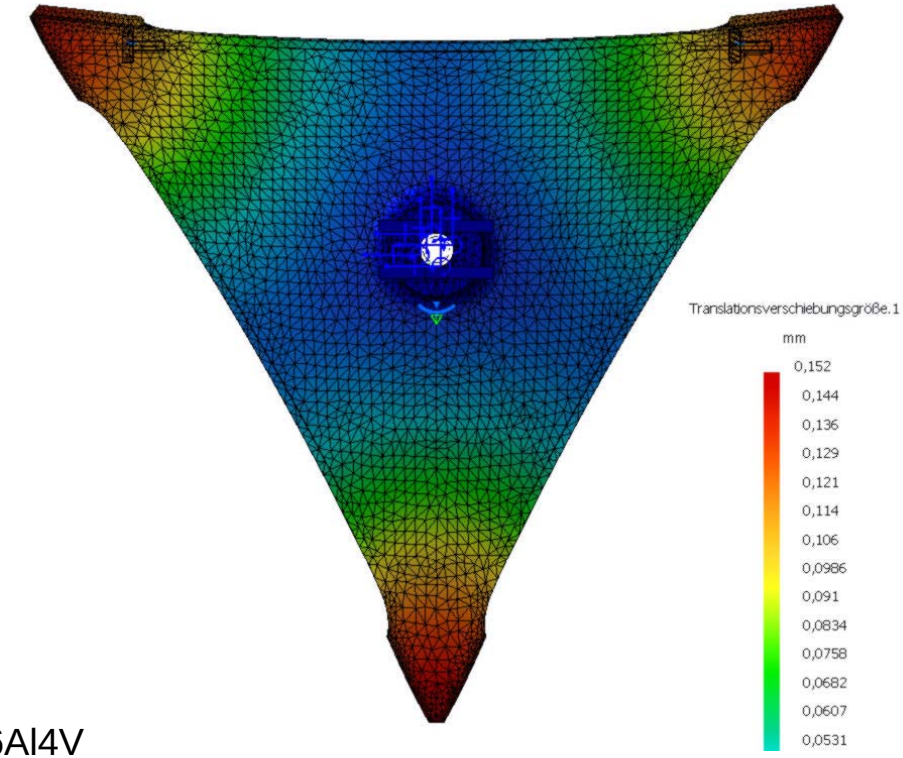

Material: Ti6Al4V

Outline of the 1.25MHz chopper disk

disk:

diameter = 338mm

thickness

center = 42mm

rim = 0.5mm

Slots:

number= 1252

width= 0.15mm

length =1mm

interspace= 0.28754°

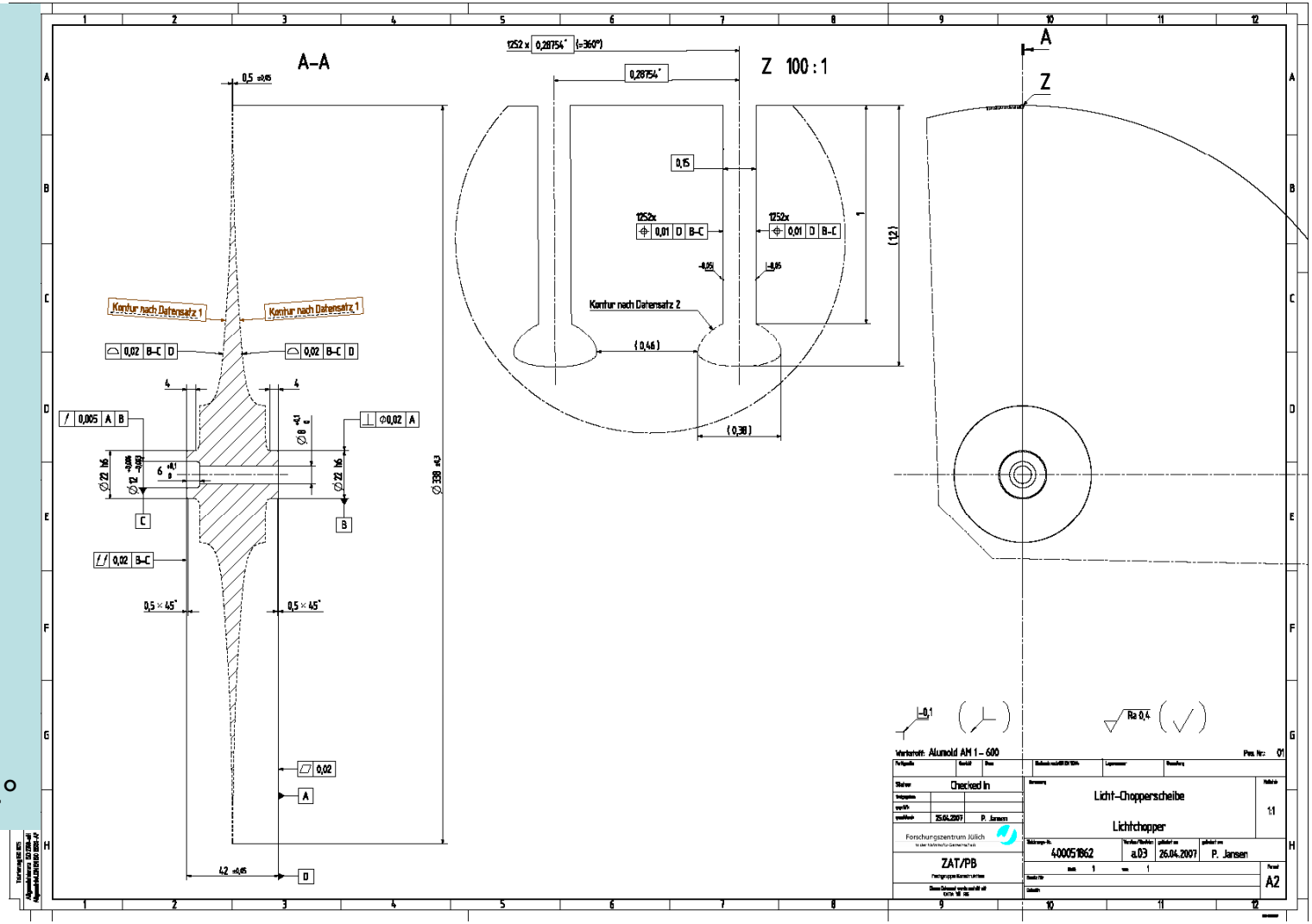

Disk contour

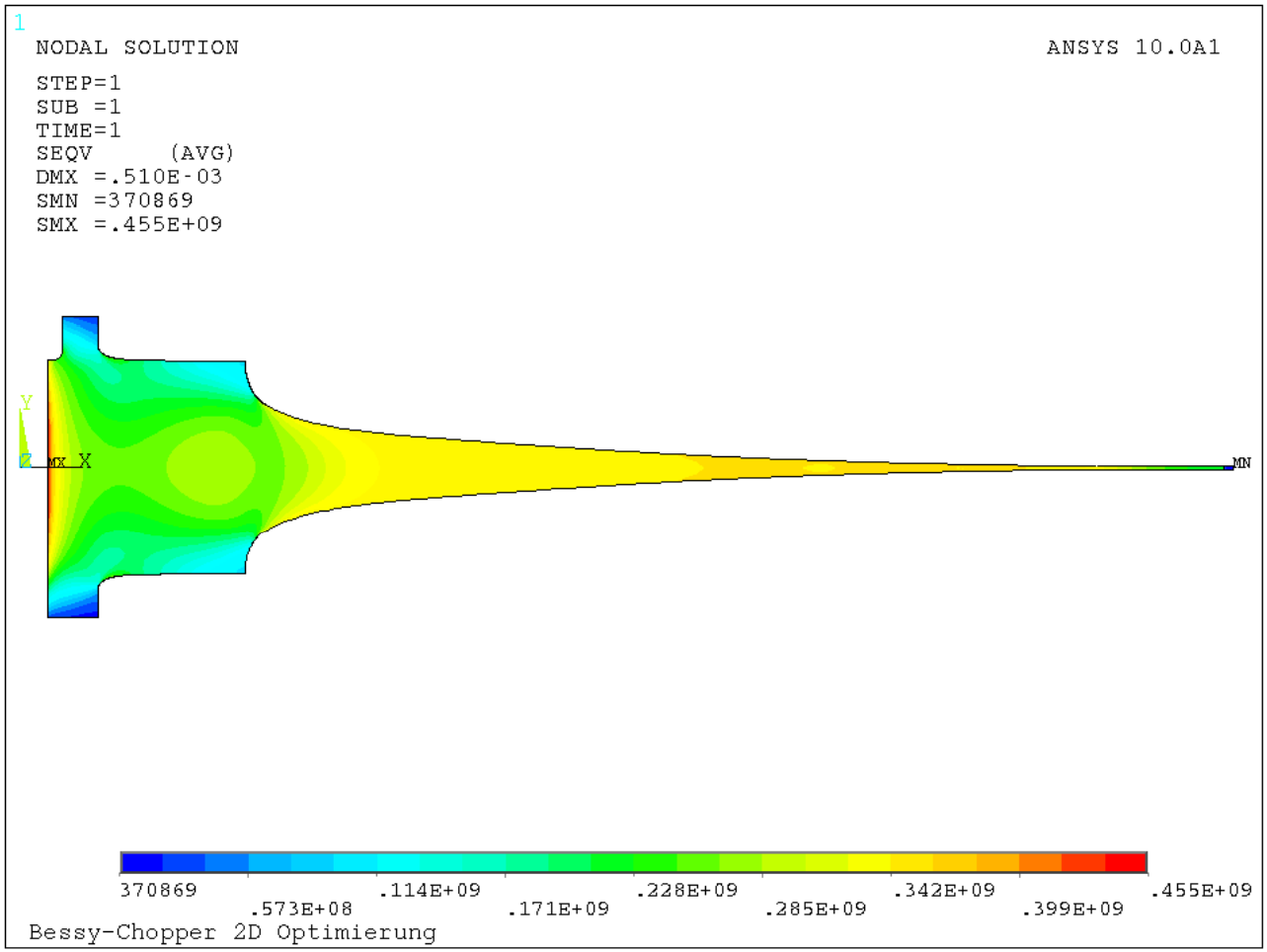

disk material:

aluminium alloy

AM1-500 (Pechiney)

580MPa tensile strength

operation speed:

998.4 Hz

Slot geometry

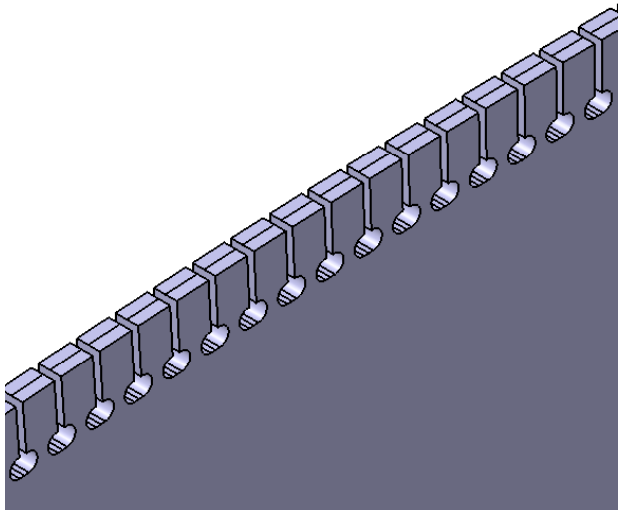

design

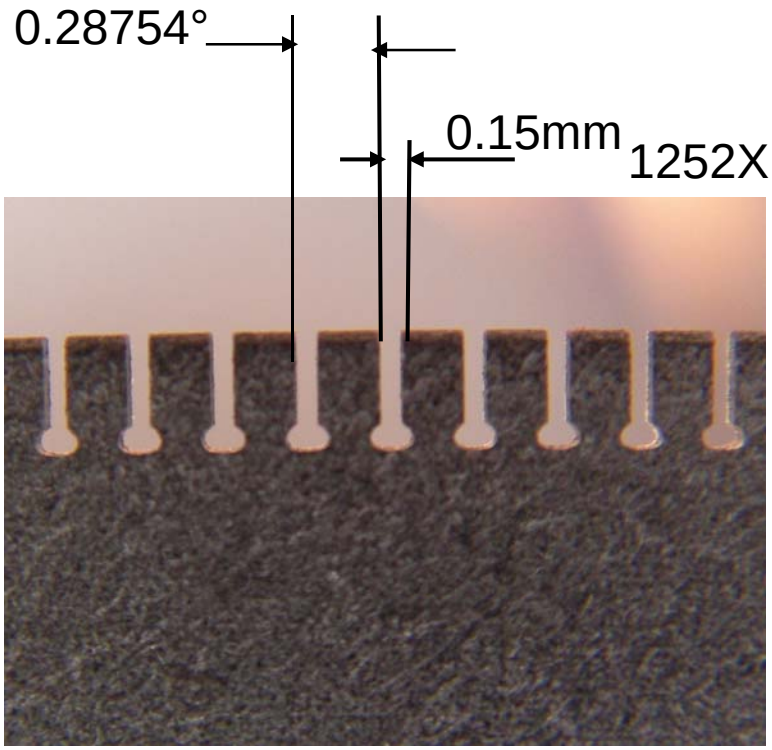

reality

nominal frequency =998.4 Hz

circumferential speed = 1060 m/s

open time of a single slot = 141 ns → covered distance of slot shoulder = 150µm

partition time = 659 ns

Magnetic bearing / motor assembly

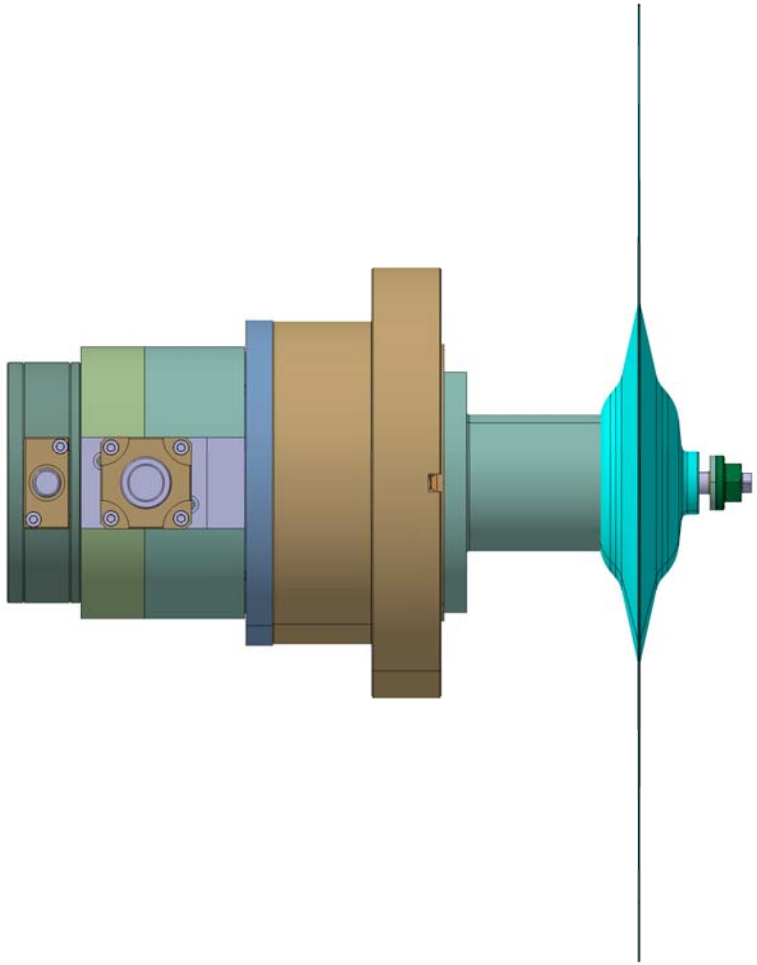

Disk housing

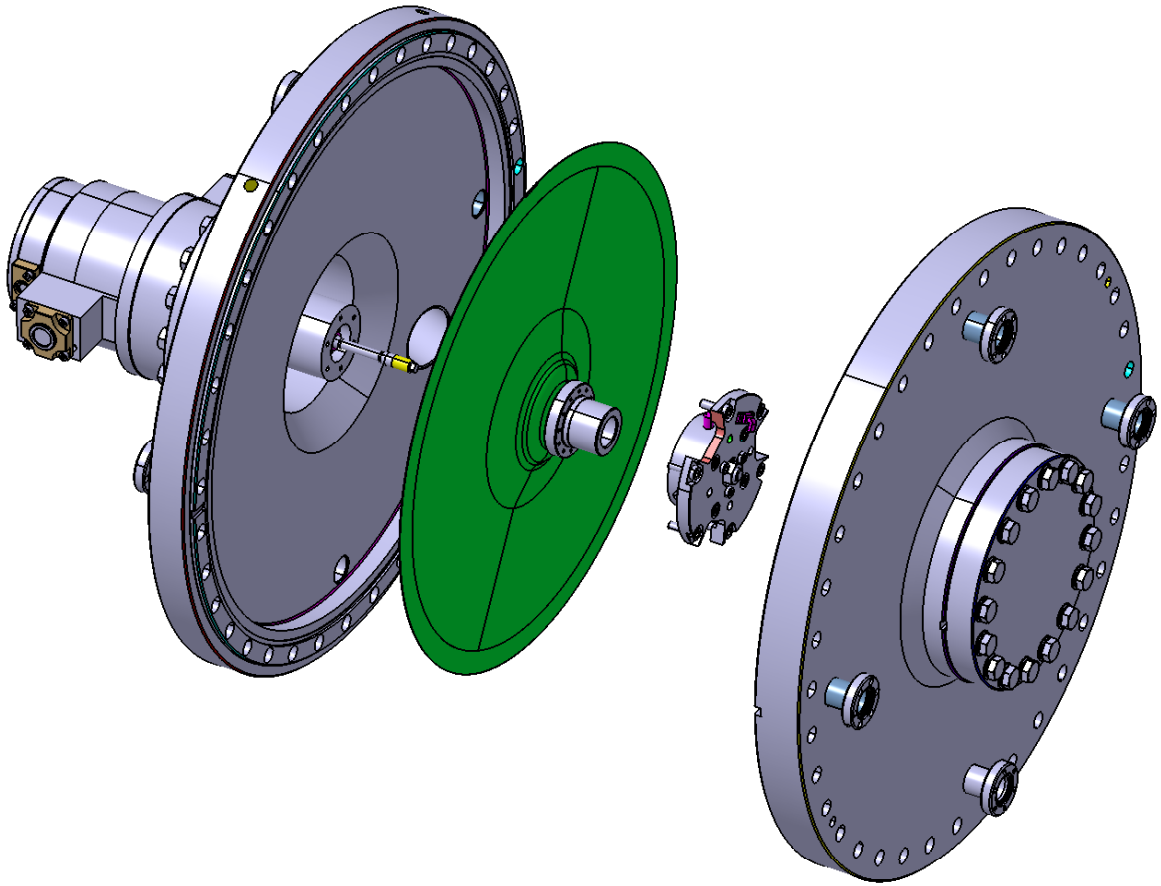

Cross sectional view of the 1.25MHz light chopper

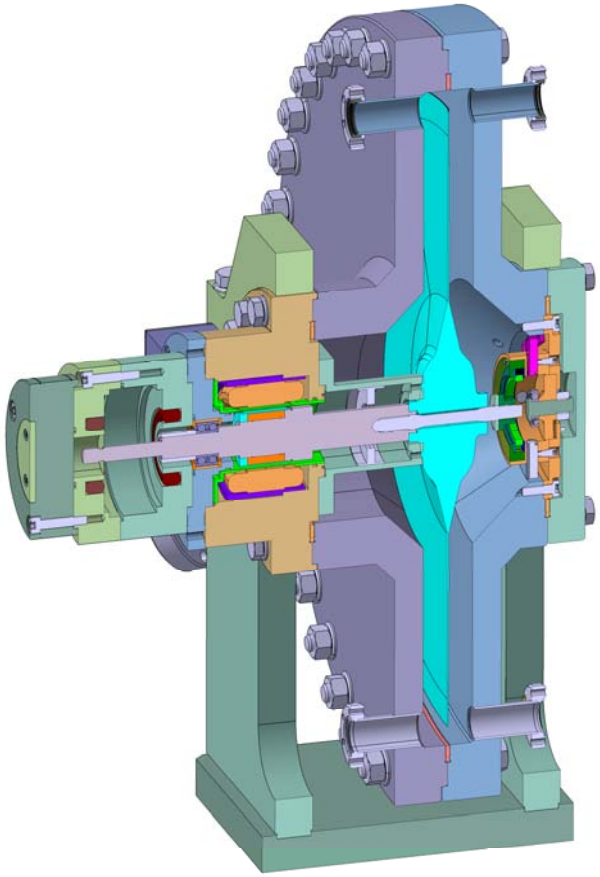

High speed X-Ray pulse selector

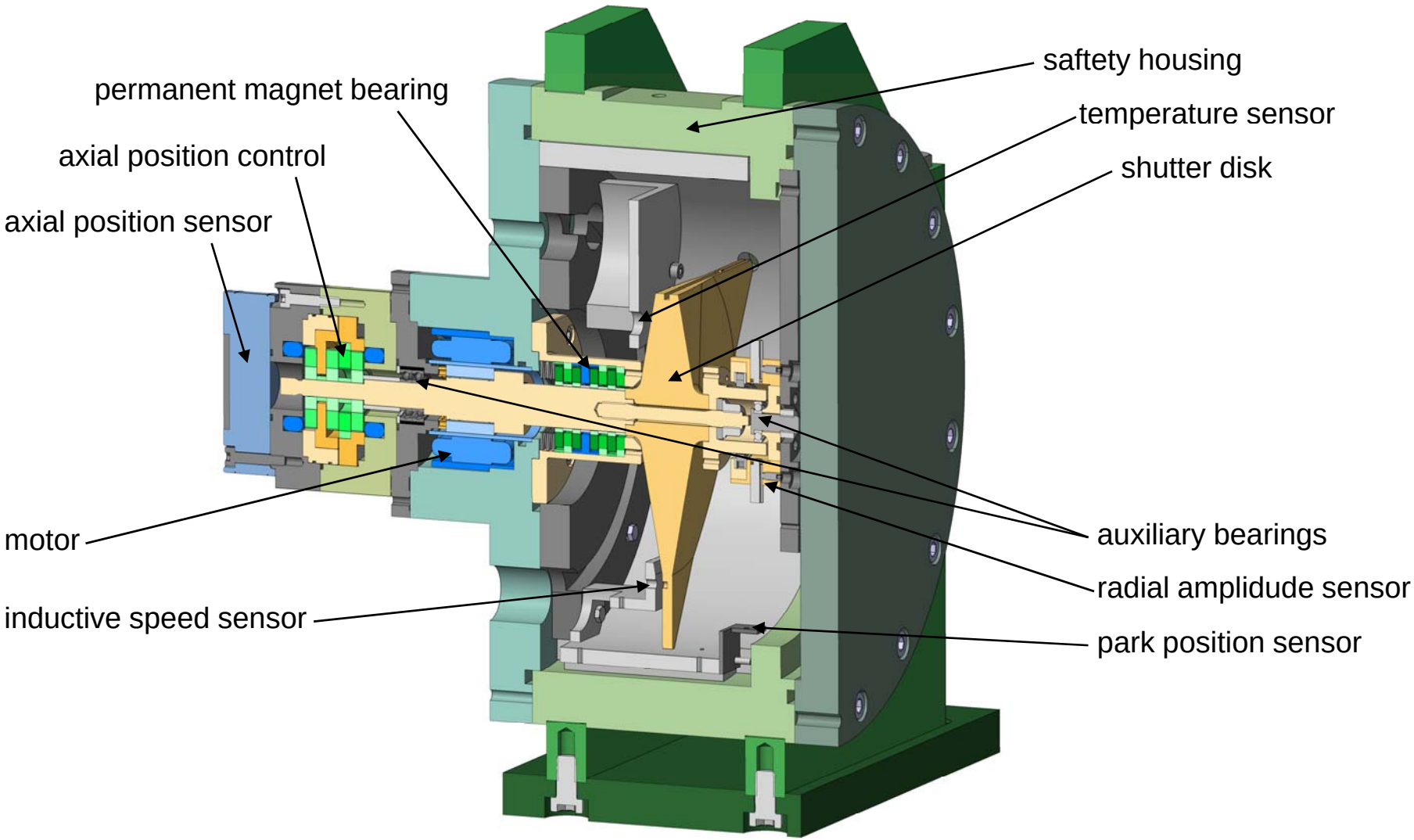

Chopper disk in opened housing

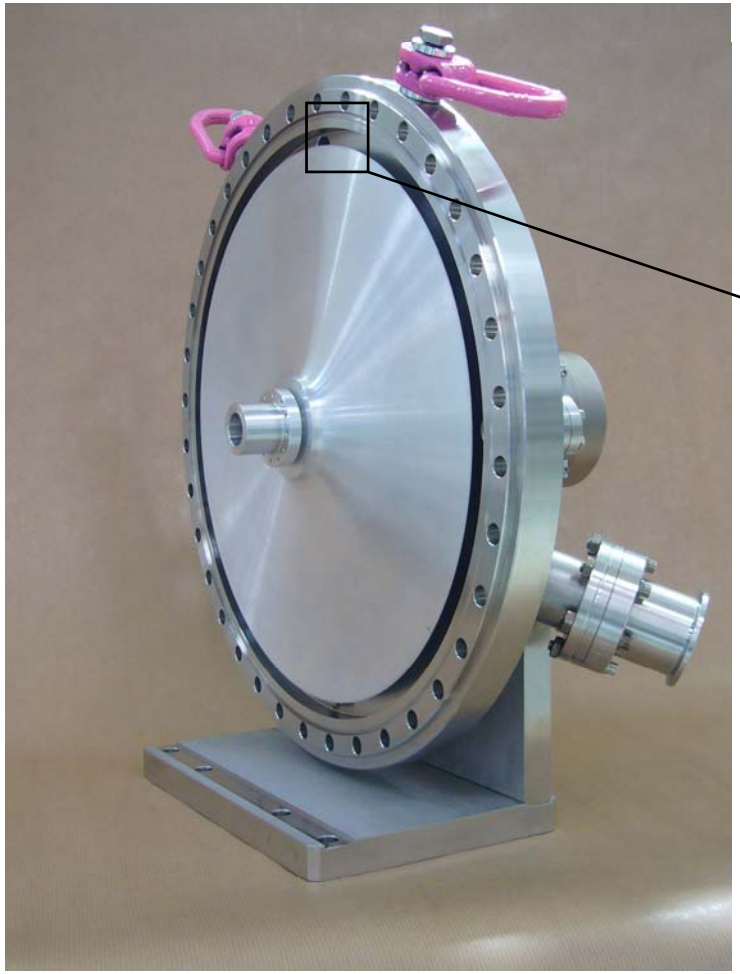

Exterior views of the 1.25MHz light chopper

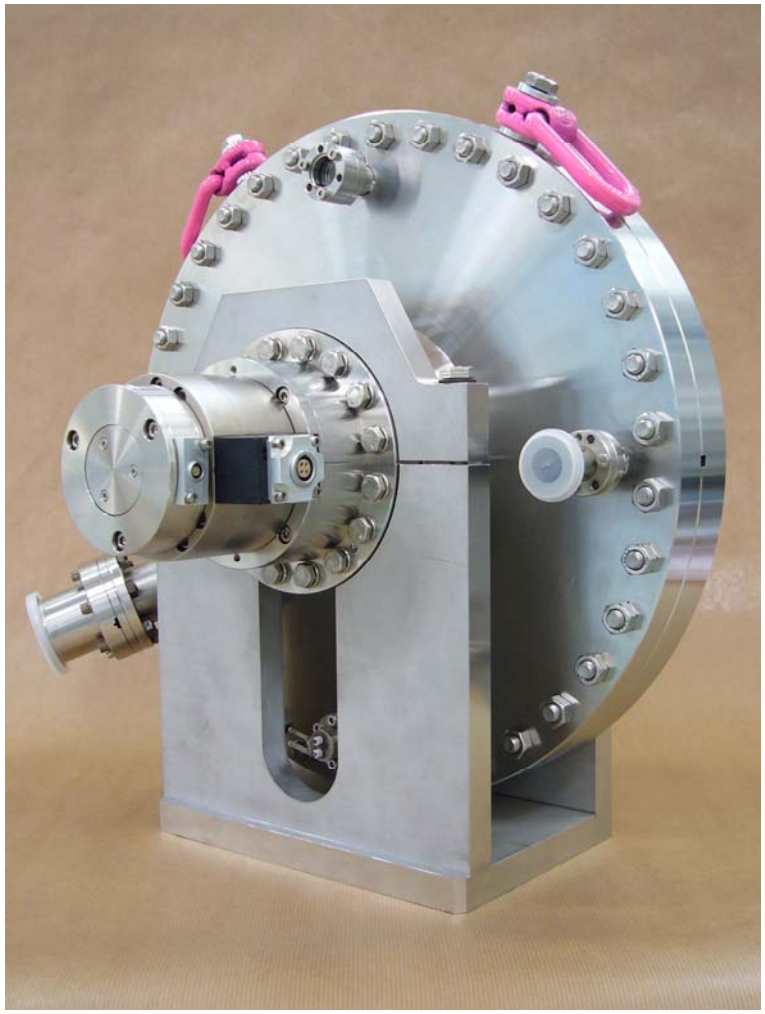

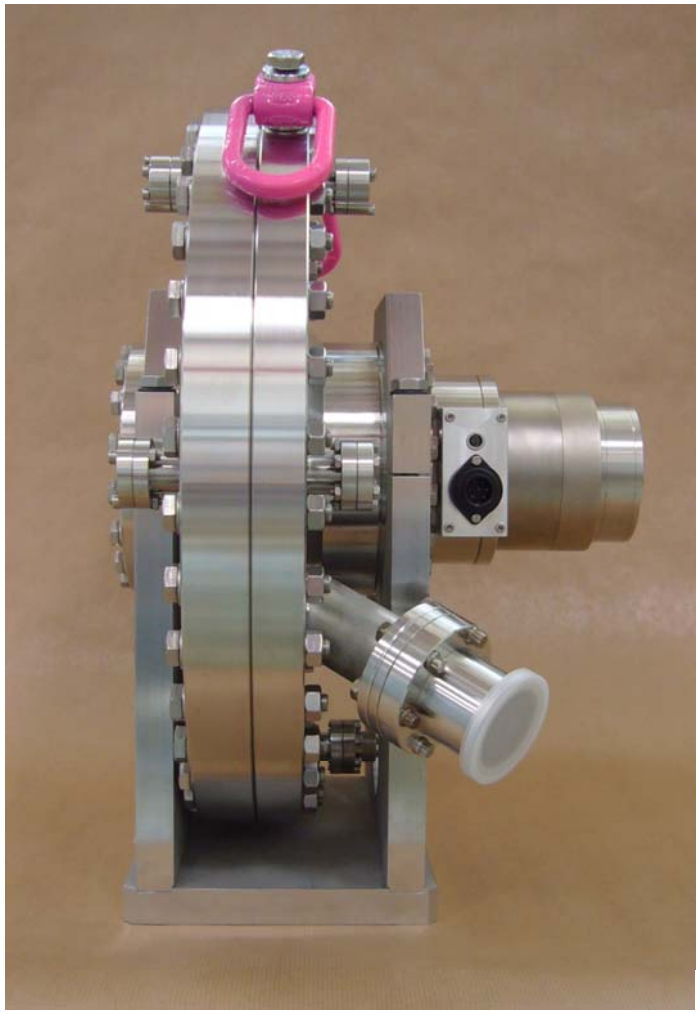

Status of the project

- successfull machining of the disk
- vibration (umbrella) modes controllable
- disk outlived 1kHz operation

optimization of drive and phase control is in process

commisioning and performance tests with photon pulses planned in fall 2008