HELMHOLTZ
GEMEINSCHAFT

DESY

Design of a

Large Offset Monochromator at PETRA III

Markus Degenhardt
Ulrich Hahn
Jan Horbach
Hans-Bernhard Peters
Horst Schulte-Schrepping

Hasylab (FS-BT) – Desy Hamburg

MEDSI – June 13, 2008

PETRA III

3rd generation synchrotron radiation source

Accelerator perimeter 2304 m

Particle energy 6 GeV

Mean current 100 mA (200 mA)

Emittance 1 nm rad

14 Beamlines (5° angular distance)

1 x 10m insertion device (ID)

3 x 5m ID

5 x 2 x 2m ID (5 mrad ~ 0.29° angular distance)

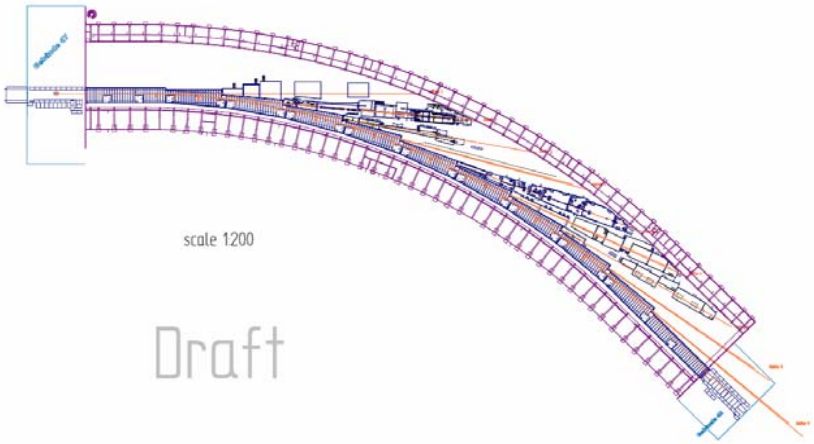

Overview

- Purpose
- Specification
- Realization
- Feedback system for stabilization
- Conclusion

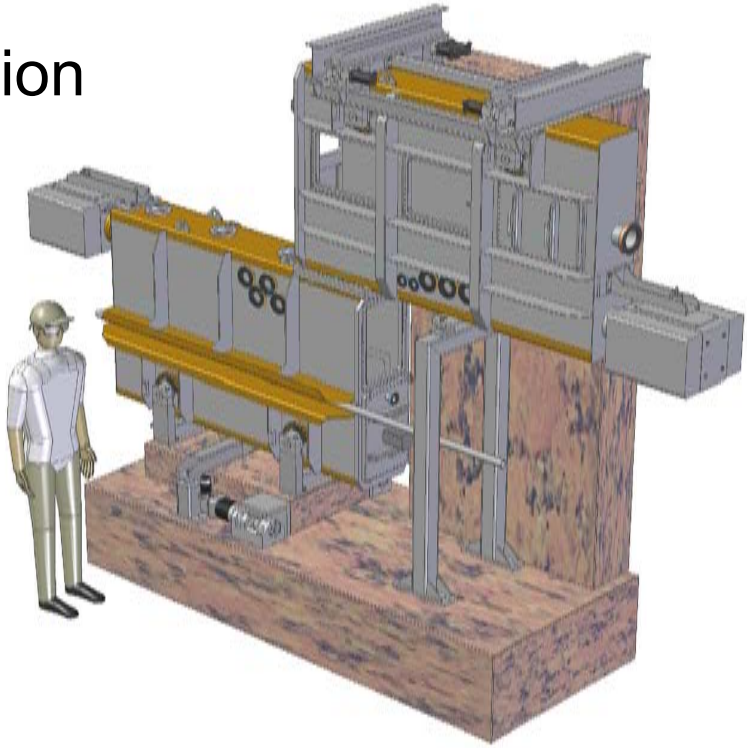

Purpose

- Selection of a small energy spectrum out of the high heat load monochromator beam
- Vertical shift of the beam by 1.25 m
- Stabilization of the beam position at the experiment

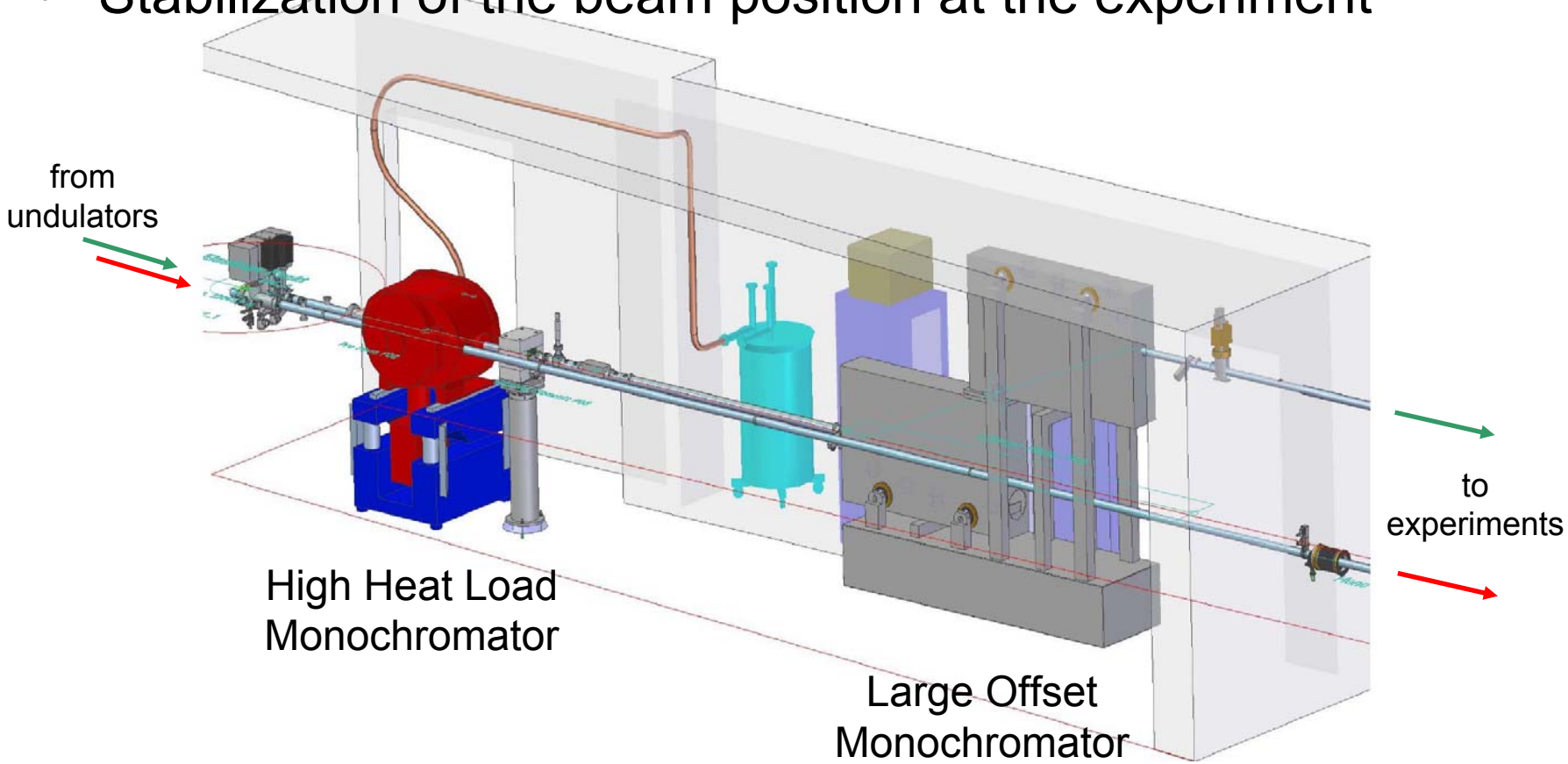

Specification

- Energy range

  Si 311: 5.4 – 18.8 keV

  Si 511: 8.4 – 29.4 keV

  smallest step: 10 meV
- Precision of the beam position at the experiment (distance approx. 20 m): 10 µm in lateral and vertical direction

→ Angular accuracy of 0.5 µrad needed

Realization

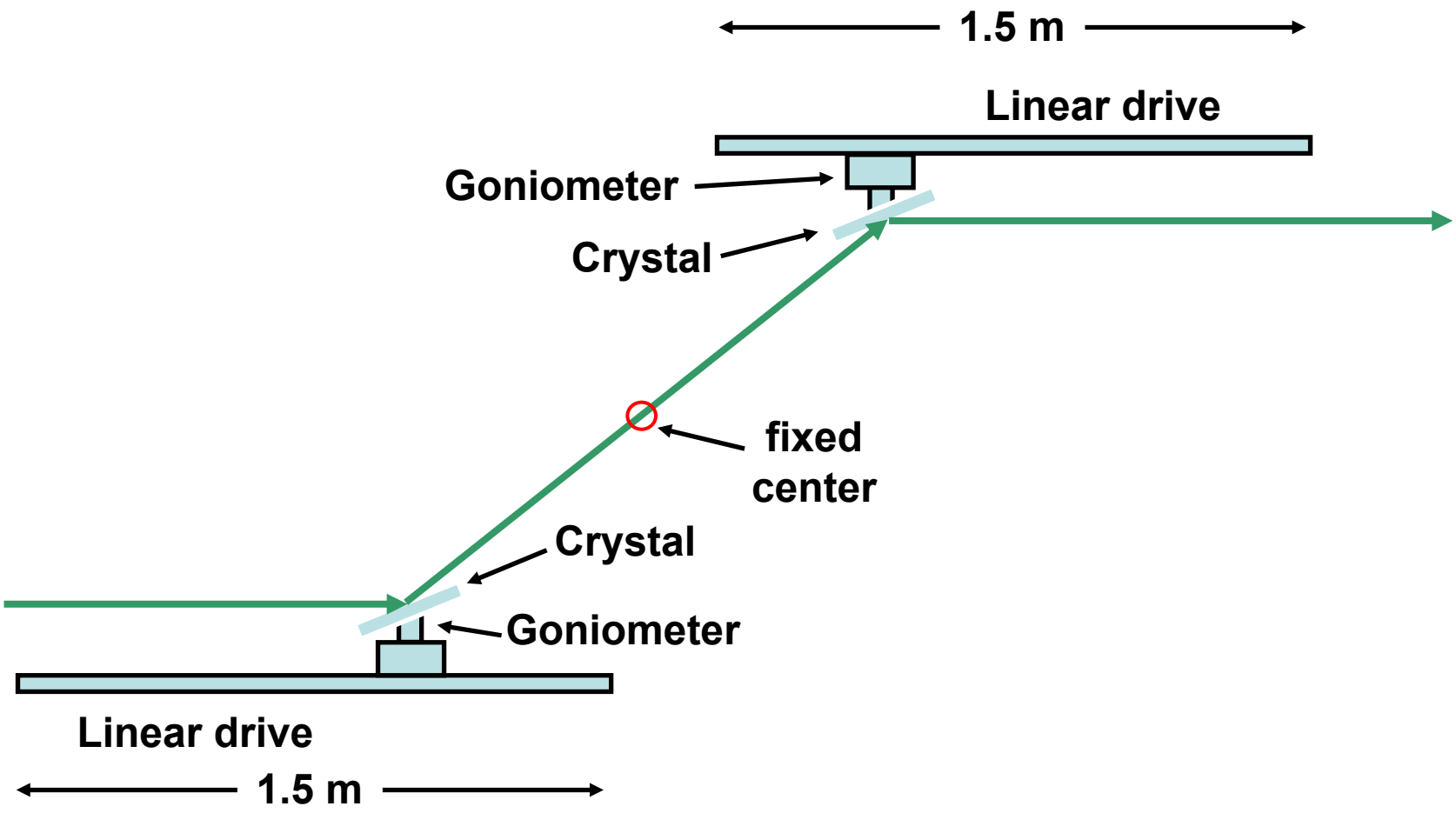

Realization

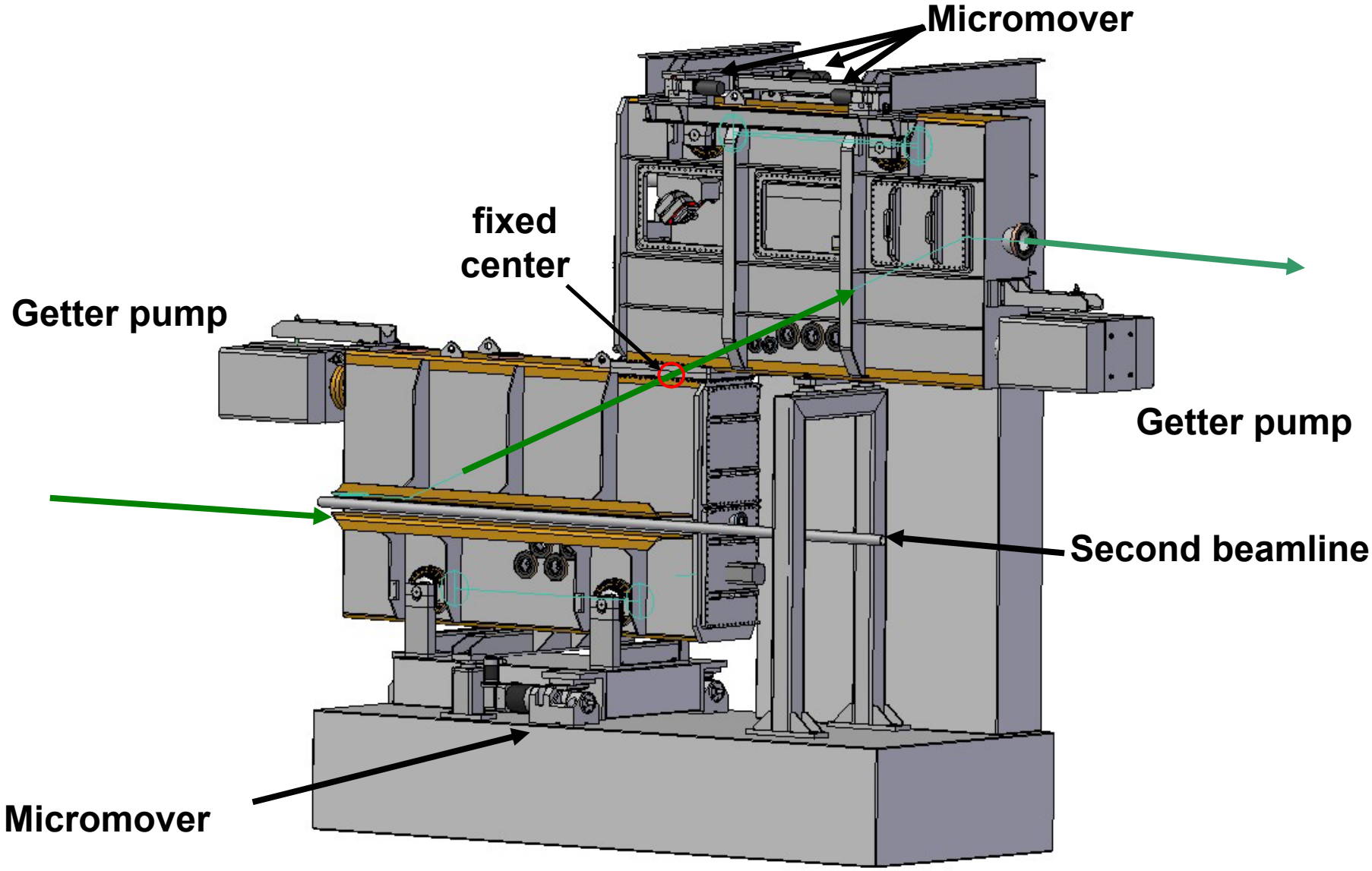

Realization

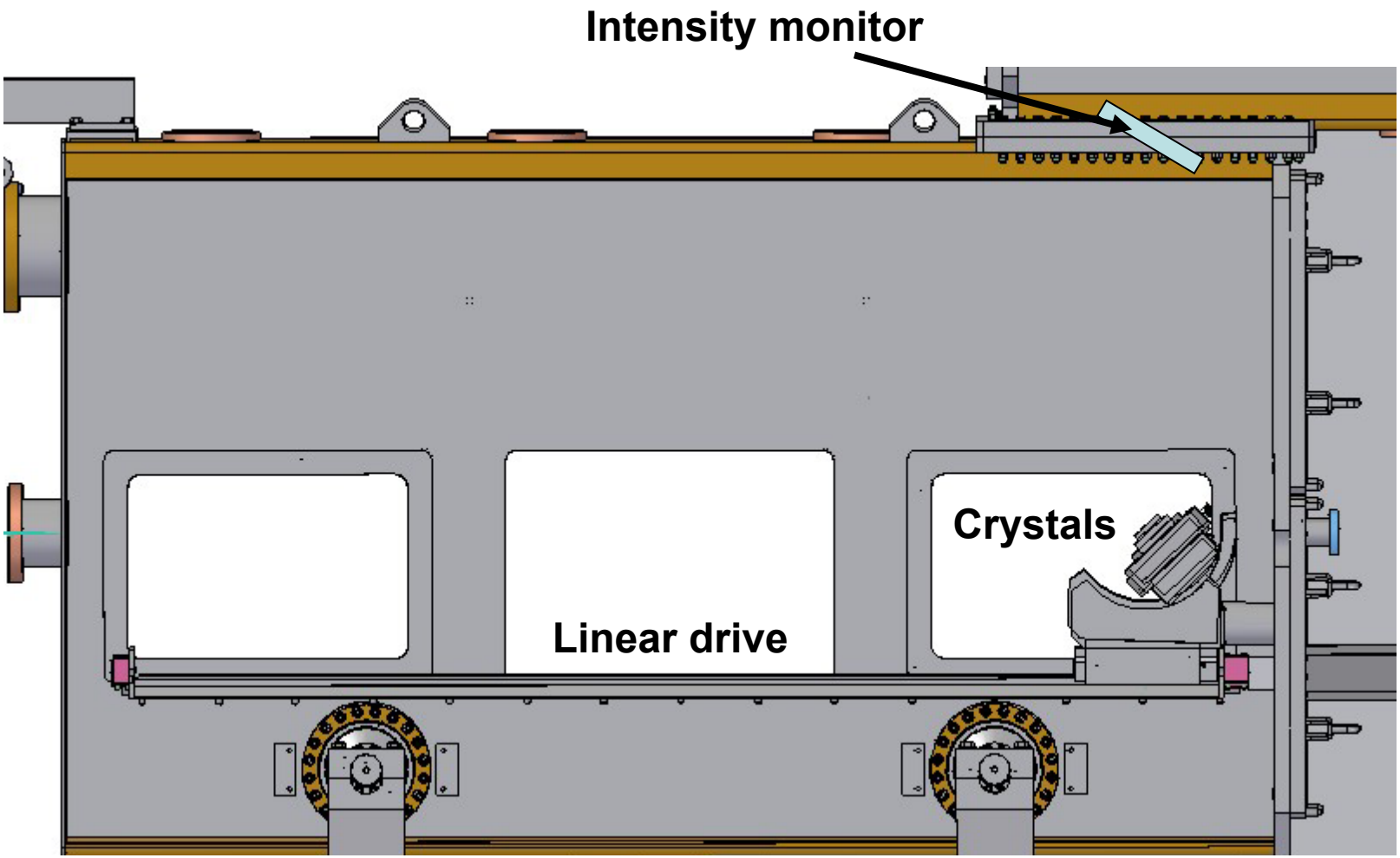

Stabilization of the Crystals

Demanded stability:
Narrow acceptance angle (2 µrad)
Stable beam position at experiment (0.5 µrad / 10 µm)

Perturbations:
Heat from motors
Mechanical stress due wiring

→ slow and in the range of µrad

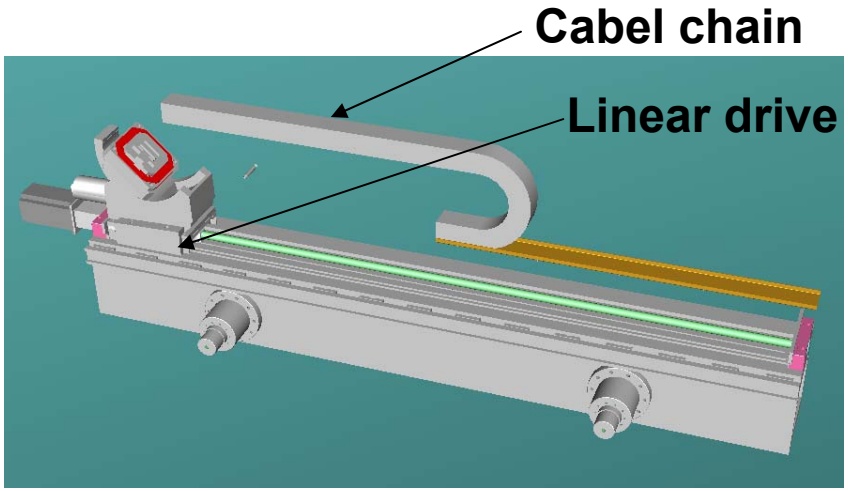

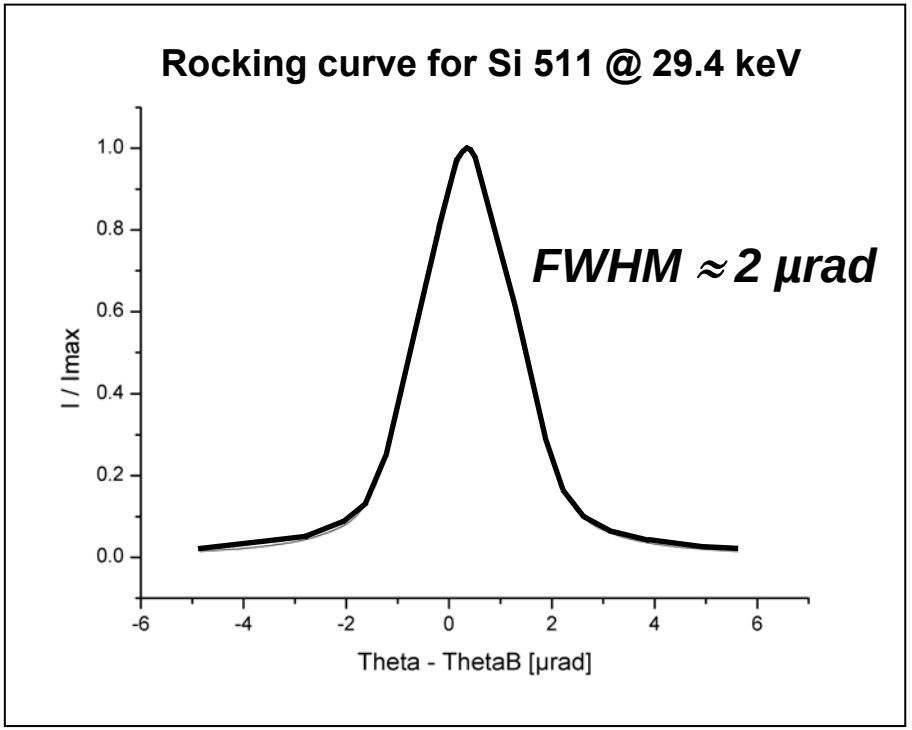

Stabilization of the Crystals

Principle:
Optimize the x-ray beam,
but stabilize the laser beam.

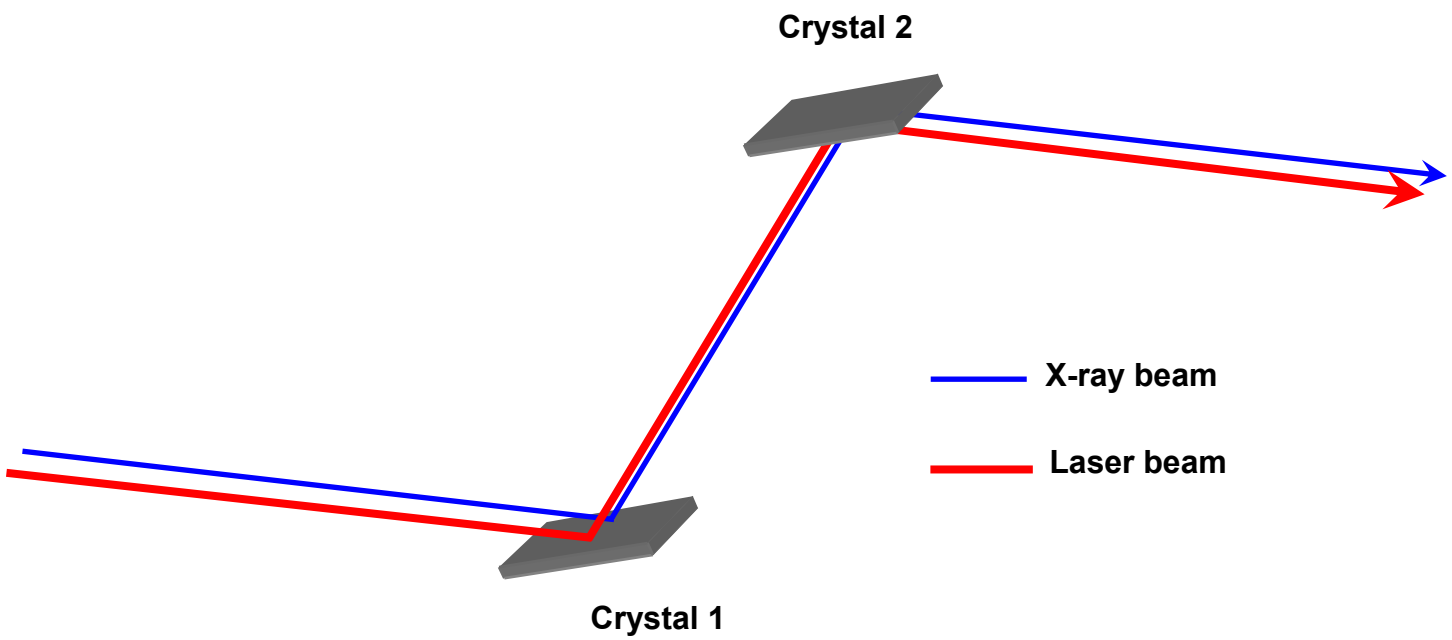

Realization

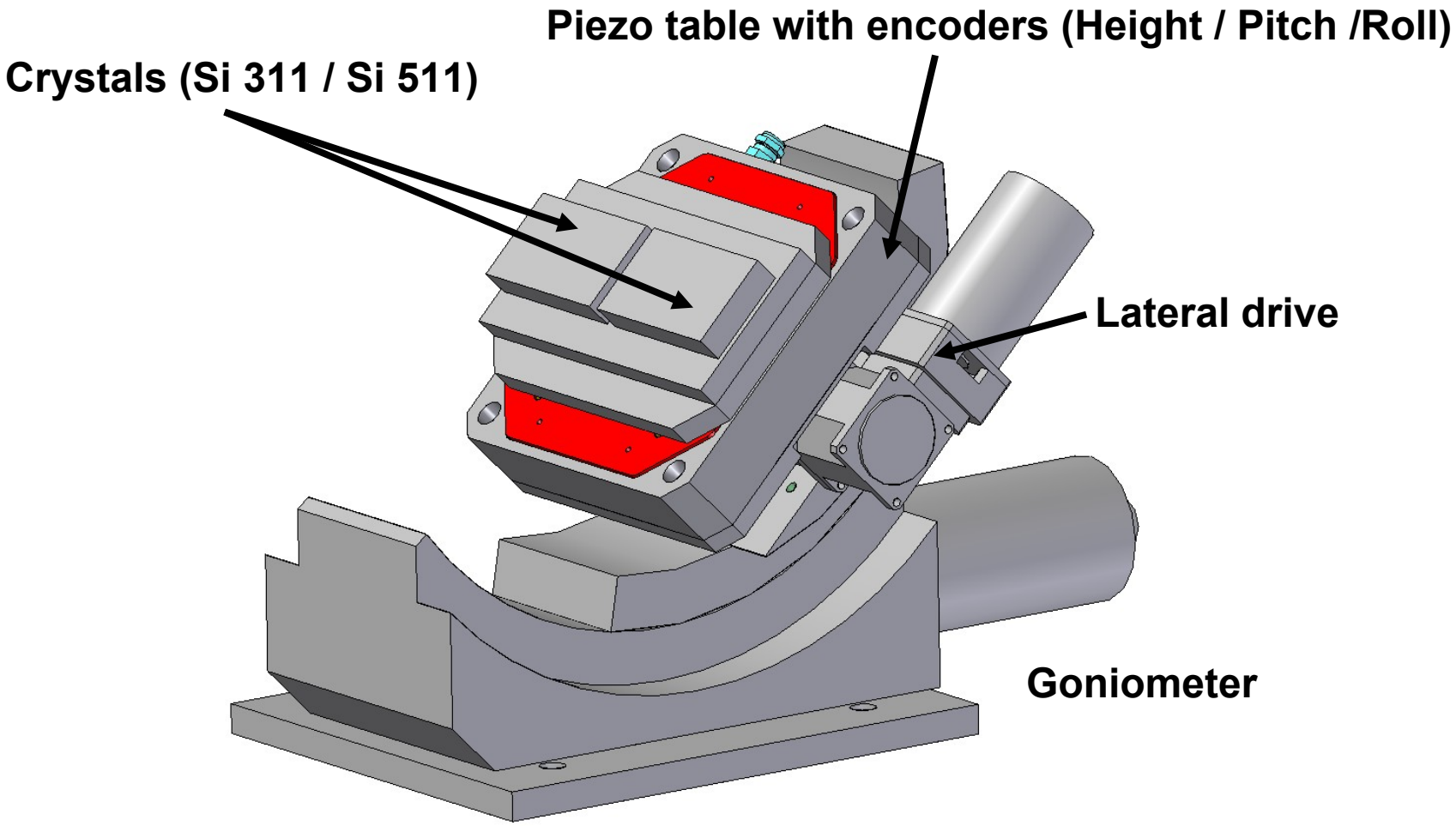

Optimization of the x-ray beam

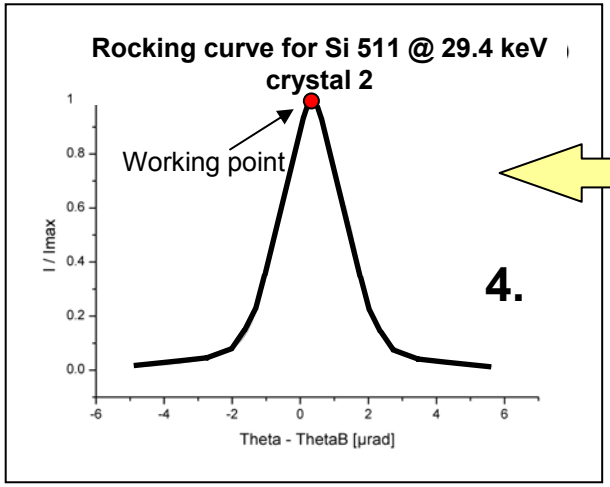

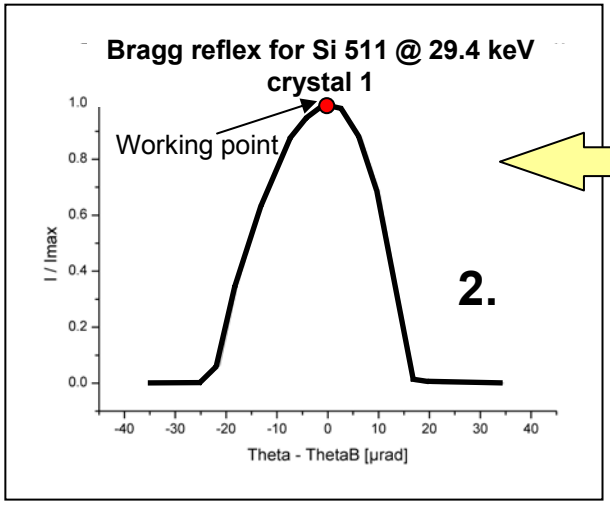

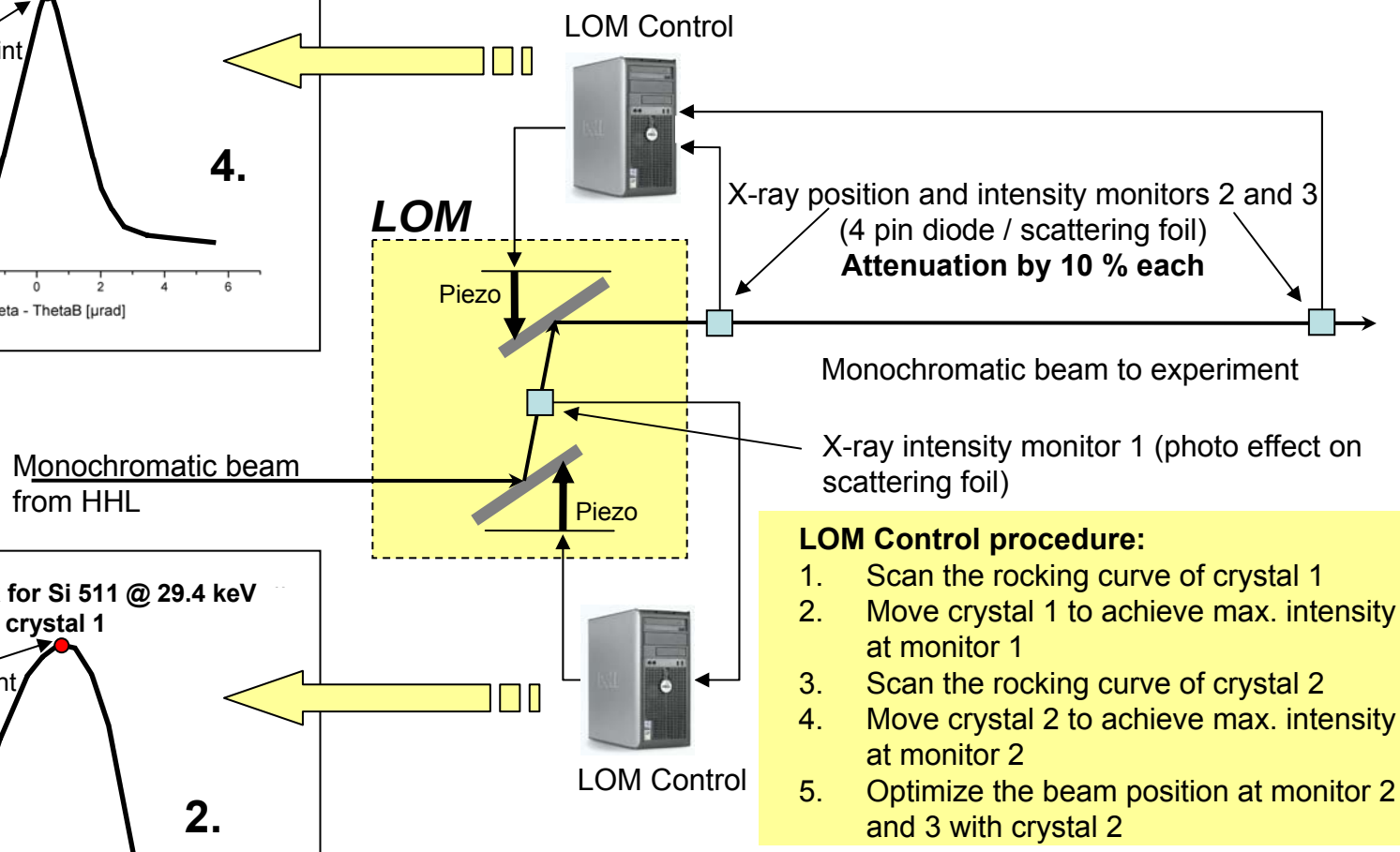

LOM Control procedure:

1. Scan the rocking curve of crystal 1
2. Move crystal 1 to achieve max. intensity at monitor 1
3. Scan the rocking curve of crystal 2
4. Move crystal 2 to achieve max. intensity at monitor 2
5. Optimize the beam position at monitor 2 and 3 with crystal 2

Standard procedure

Stabilization of the laser beam

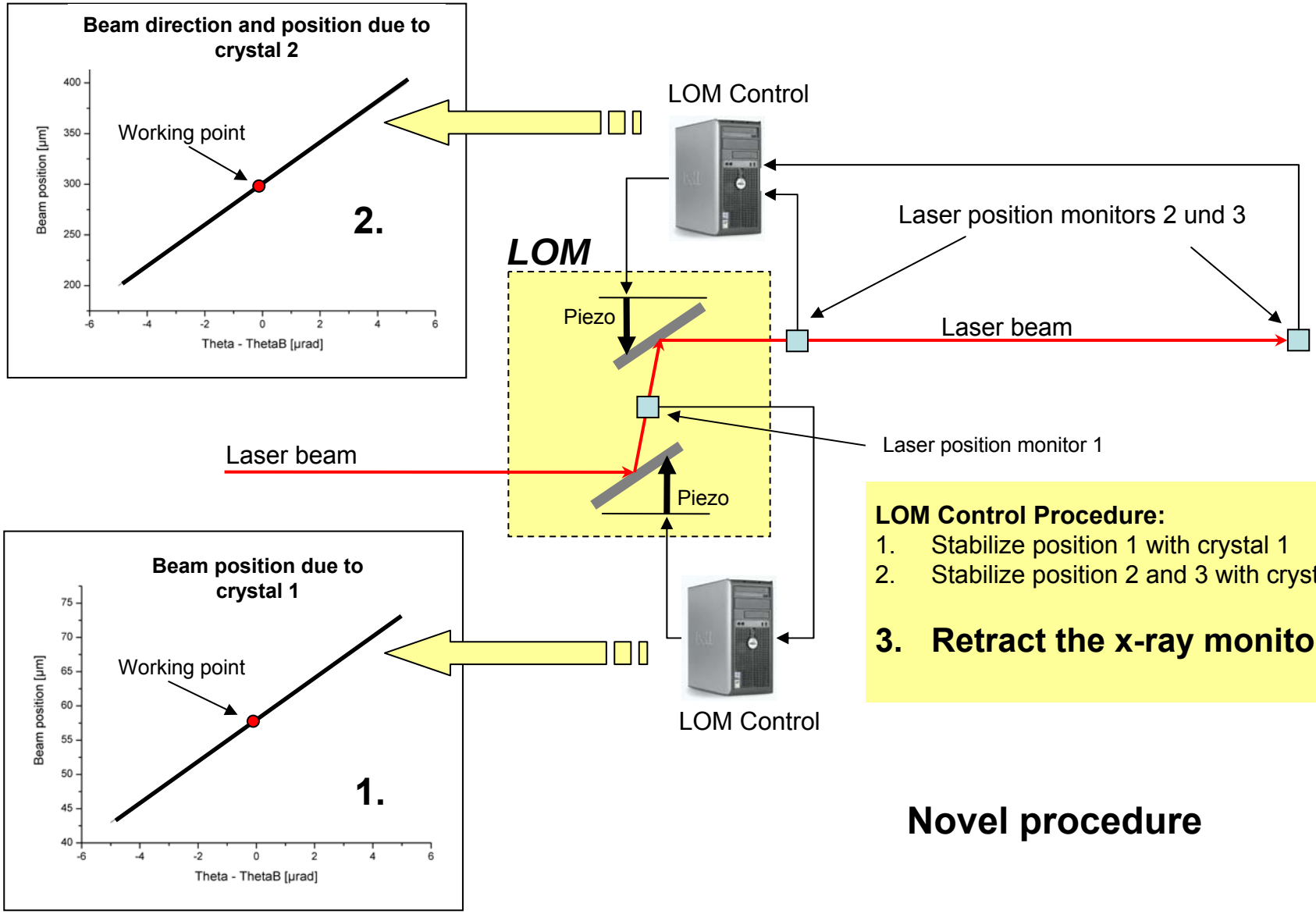

LOM Control Procedure:

1. Stabilize position 1 with crystal 1
2. Stabilize position 2 and 3 with crystal 2

3. Retract the x-ray monitors

Novel procedure

Laser position monitor 1

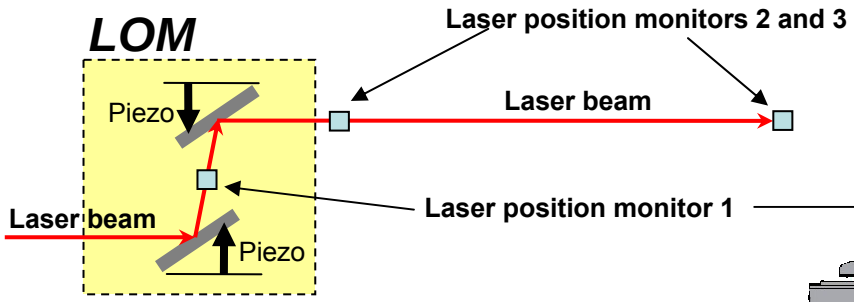

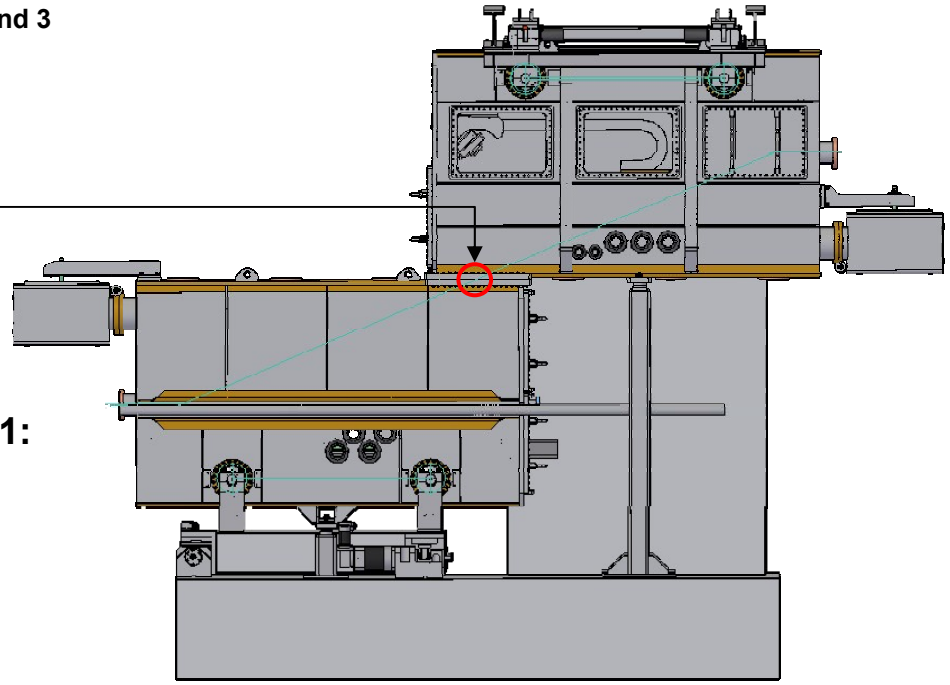

Requirements on laser position monitor 1:

- Vacuum compatible
- Semi-transparent
- µm resolution
- Position on middle axis
- Variable angle of incidence

Laser position monitor 1

Data evaluation taken from alignment laser system for PETRA III front ends:

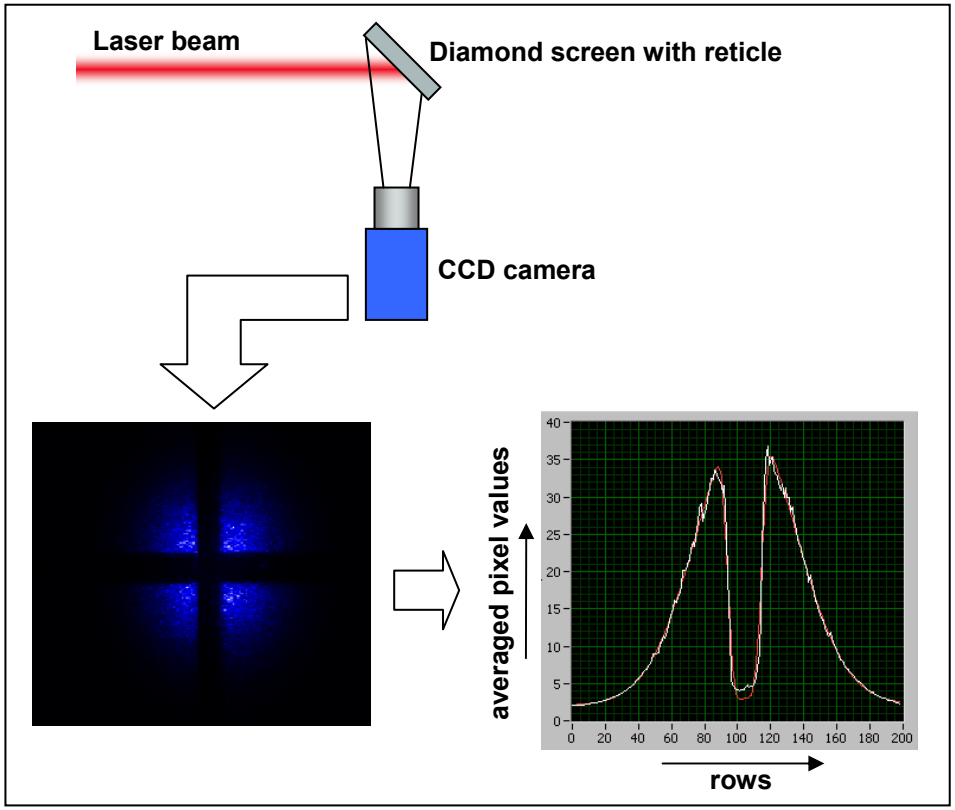

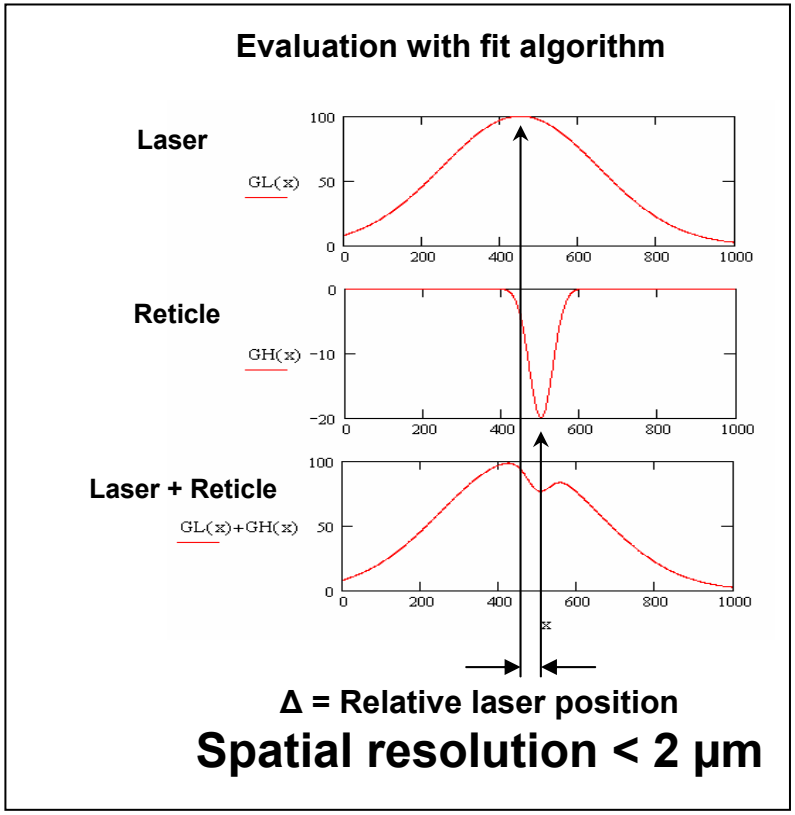

- Use semi-transparent glass screens for laser position monitor 1
- Signals from laser position monitors 2 and 3 are affected in the order of 0.1 µm

Laser position monitors 2 and 3

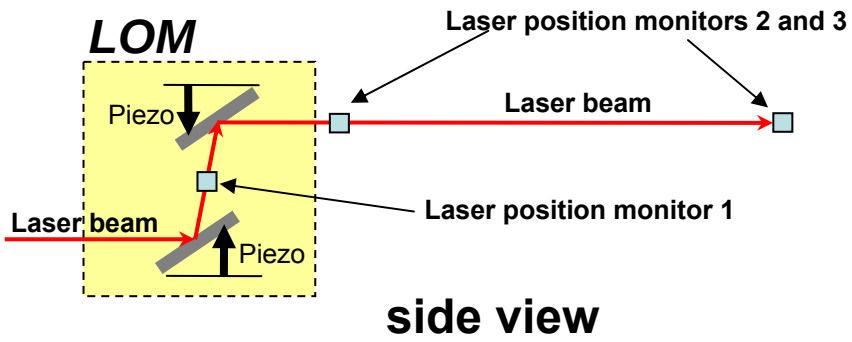

Spatial resolution < 1µm ⇔ Angular resolution < 50 nrad

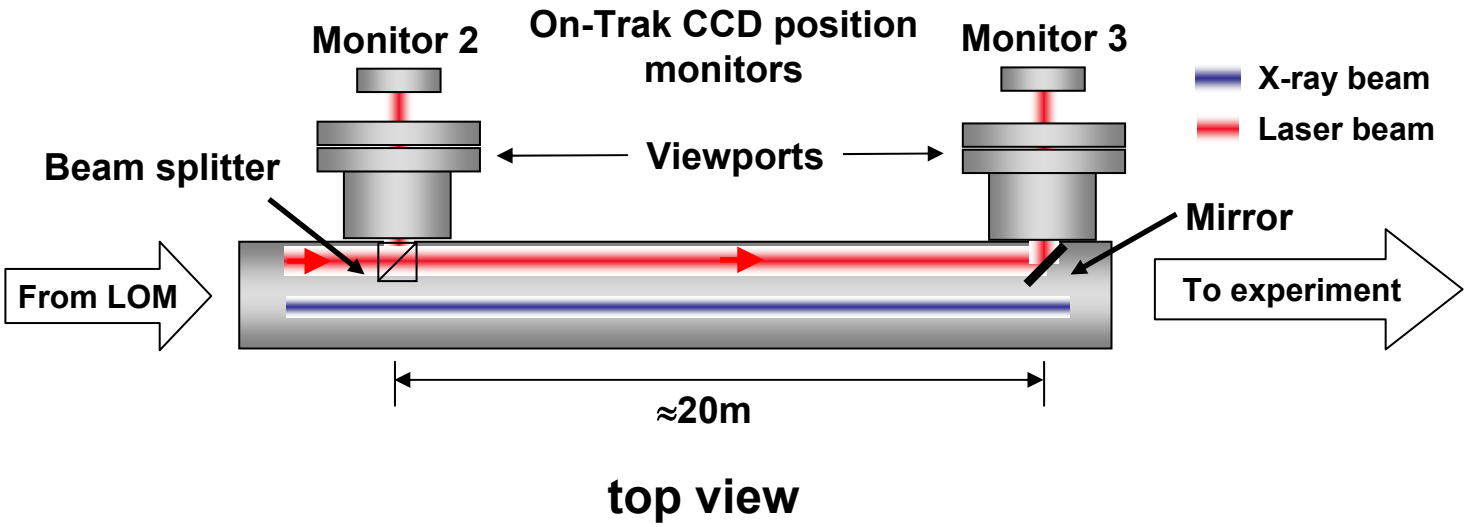

Conclusion

- Offset of the X-ray beam by 1.25 m
- Narrow energy bandwidth down to 300 meV
- Scan resolution of 10 meV due to piezo actor
- Stabilization of the X-ray beam by piezo actors
- Laser monitoring system avoids attenuation of the X-ray beam