FEA analysis of heat load components for the ESRF high energy beamline

L. Zhang, Th. Buslaps, V. Honkimäki

M. Di Michiel, P. Mackrill, Y. Dabin

Beamline configuration after upgrading

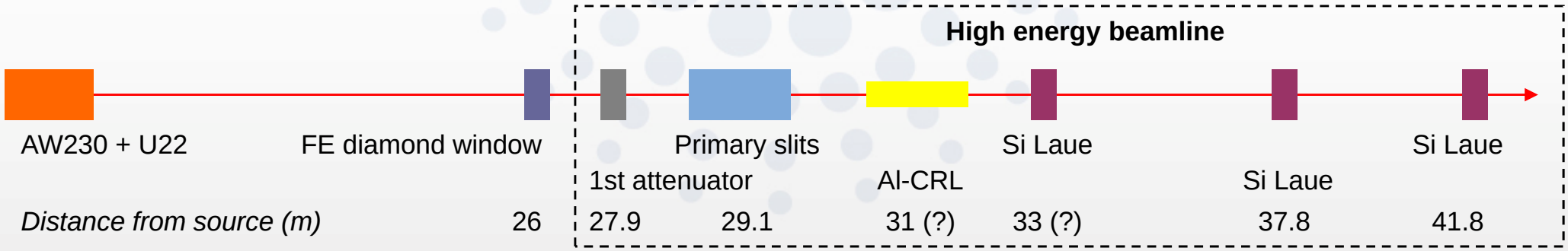

ID source upgrading:

- AW230 + W3T
- ➔ AW230 + U22 (in-vacuum undulator)

Beam size reduction:

- HxV=27x2.7 mm^2 at 27 m
- ➔ HxV=3.86x4.70 mm^2 at 27 m (much smaller in H)

New components, re-arrangement of some components

- New attenuator
- New primary slits (High Heat Load primary slits)
- Compound refractive lenses
- 1st Si Laue crystal re-arrangement

Heat load distribution

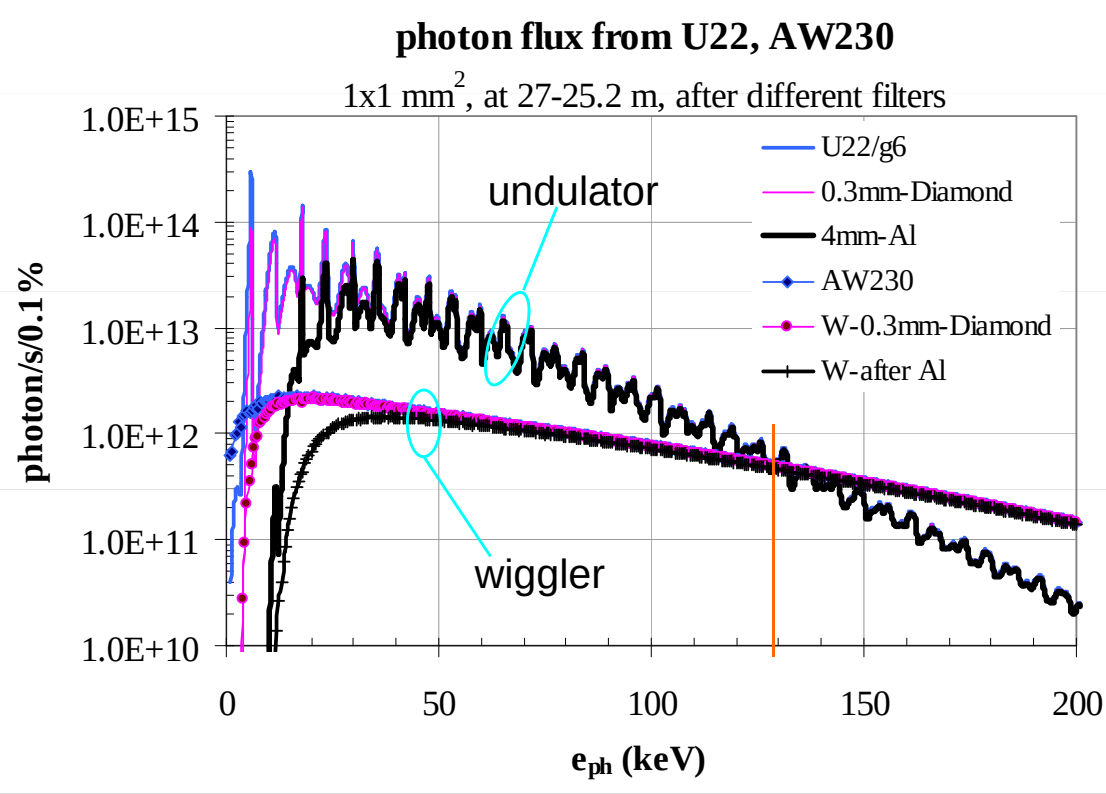

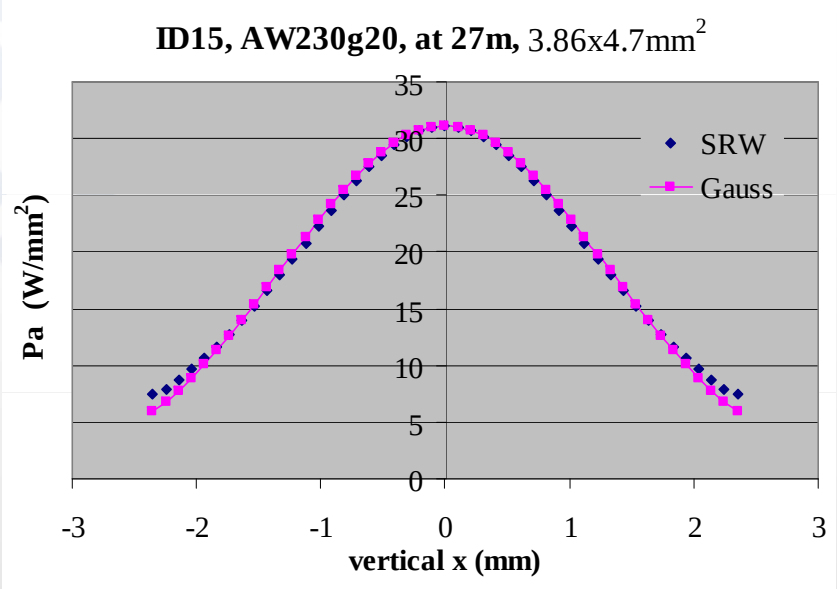

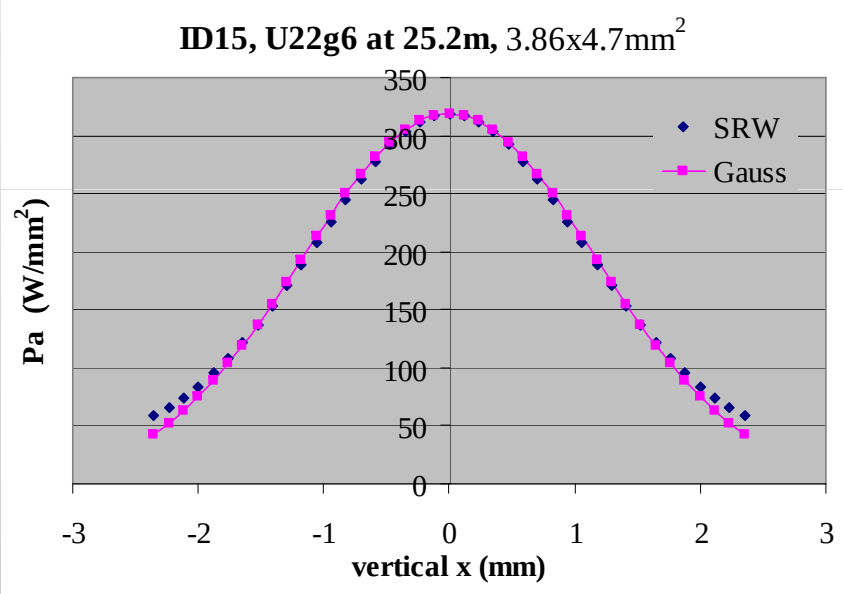

Heat load on all beamline components

- 1st attenuator
- Primary slits
- Compound refractive lens
- Laue crystals

1st attenuator

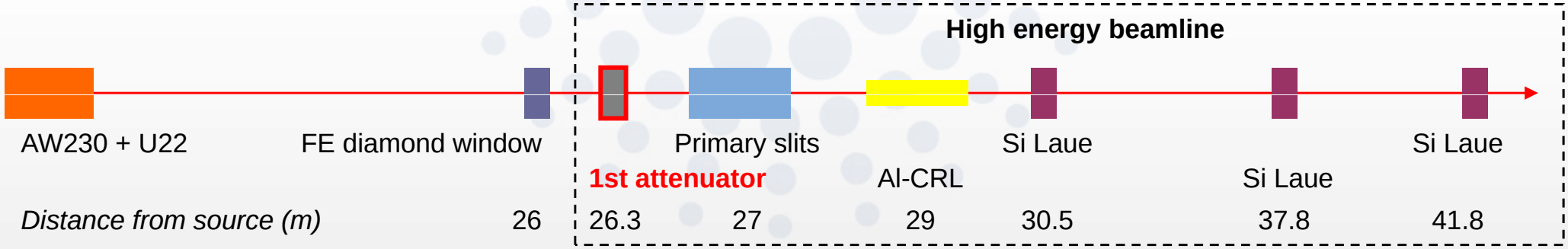

- Replace existing 4-mm thick Al-attenuator
  - Higher heat load
  - Smaller beam size
- Al, Si, CVD SiC,…
- Gas attenuator (heavy noble gases: *krypton, xenon*)
- LN_2 cooled Si attenuator

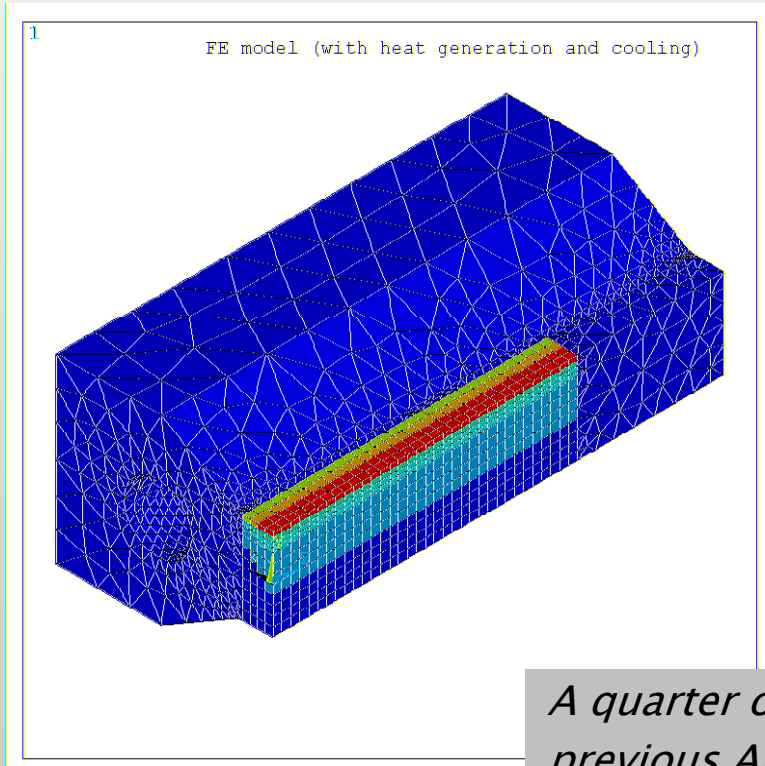

A quarter of model previous Al attenuator

1st attenuator - static

previous Al attenuator

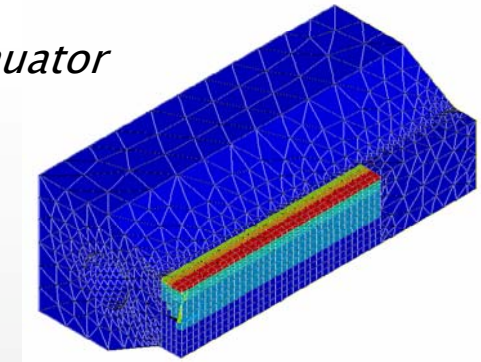

Static design similar as present Al-attenuator but smaller center thin part, cooled on outer ring

- ➢ T_{max}=2935 °C > melting point
- ➔ Reduction of **beam size** by using of primary slits
- ➔ Reduction of **heat load** by using a pre-attenuator (Diamond with gold coatings)
- ➔ Significant reduction of photon flux

- ➔ Alternate designs: rotating cup or disk

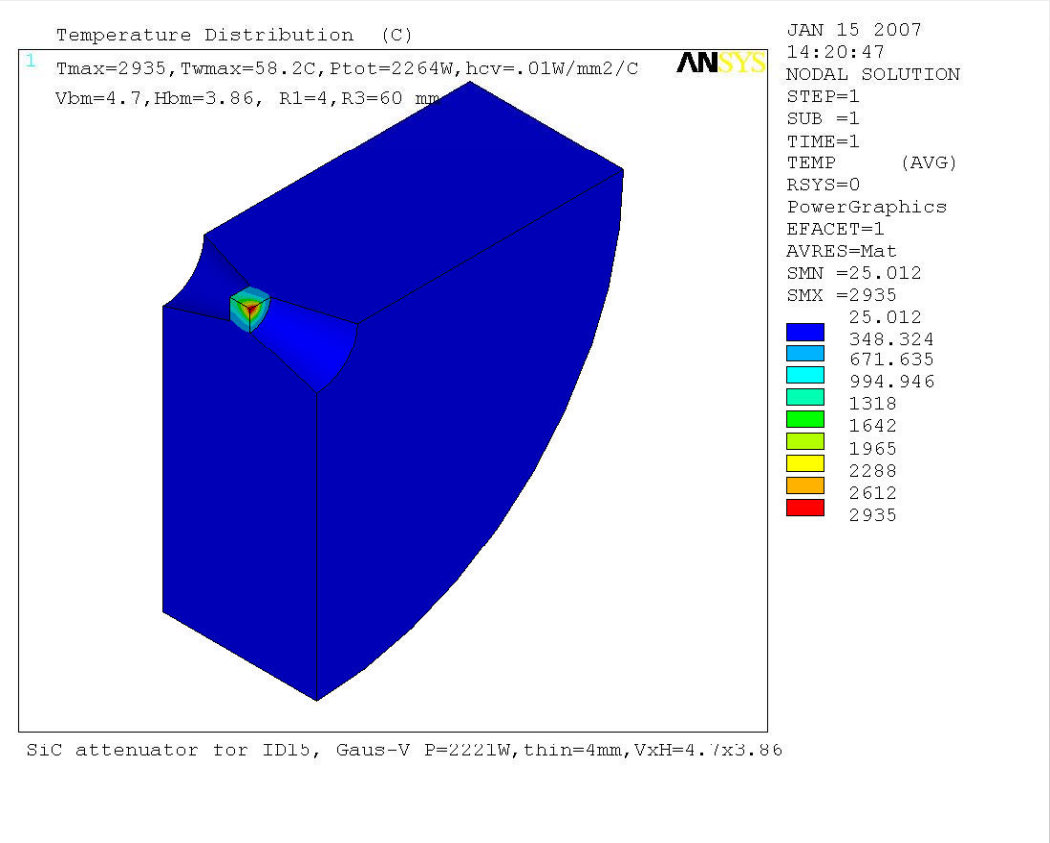

1st attenuator – rotating cup

Similar design as SLS rotating cup attenuator

- Thick=4 mm, 2300 W absorbed *(SLS: 1mm, 1850 W)*
- Spreading heat load on the cylindrical surface of the cup
- Thermal radiation cooling + water cooled box
- CVD SiC, ϵ=0.9, ϵ_{Cu}=0.6 with copper black-oxidized
- $T_{max-cal}$=1073 °C *(SLS: 1800 °C)*

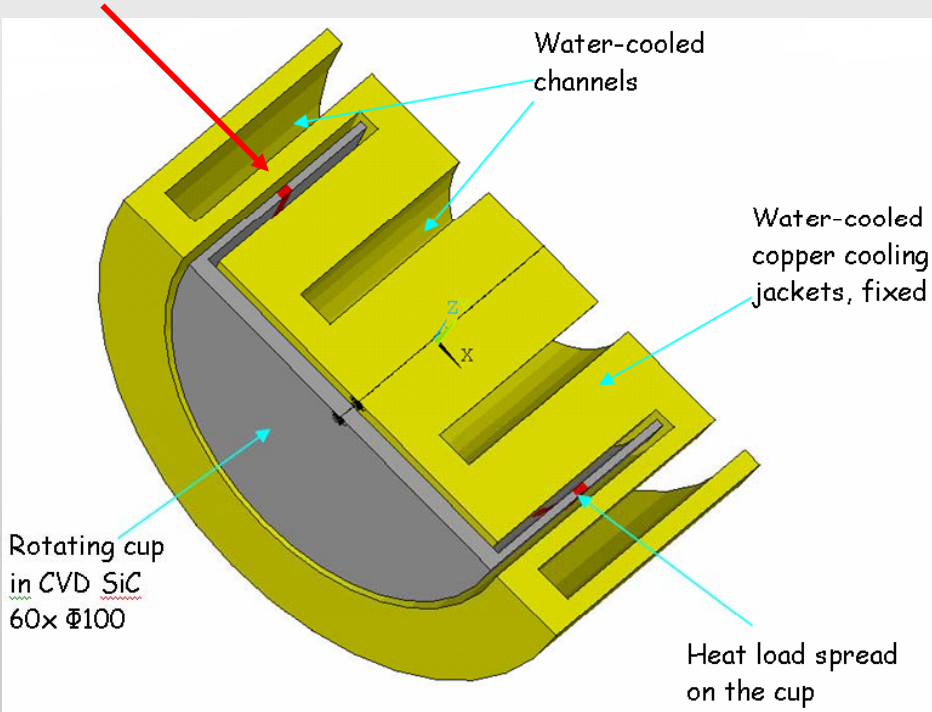

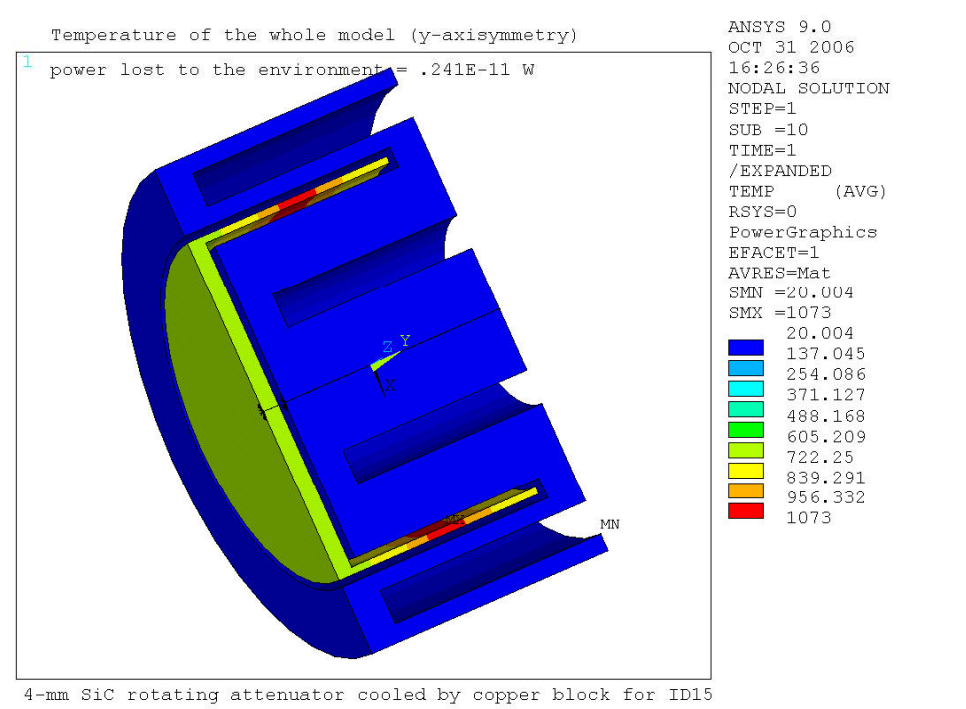

1st attenuator – rotating disk

- Thick=3.5 mm, 2300 W absorbed
- Thermal radiation cooling + water cooled case
- CVD SiC, ϵ=0.9, ϵ_{BP}=0.95 with Black Paint on the stainless steel box
- $T_{max-cal} \approx 800$ °C

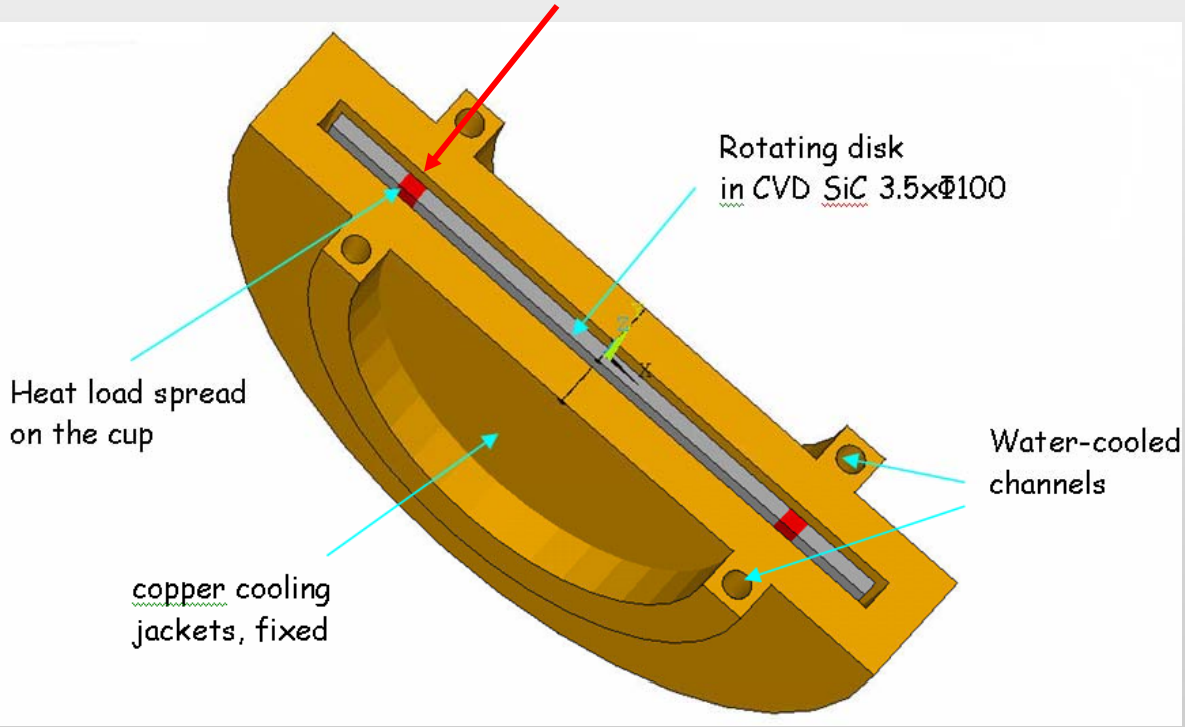

60 rpm

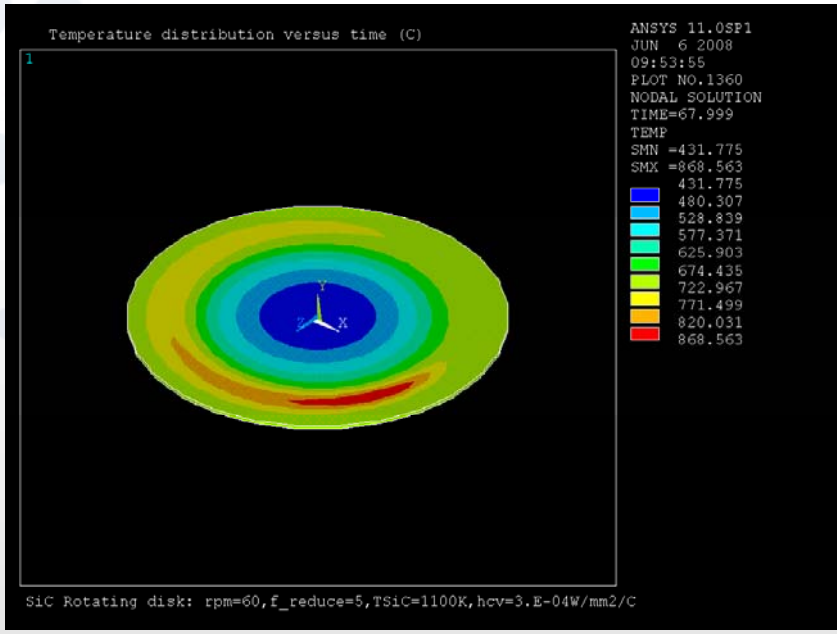

300 rpm

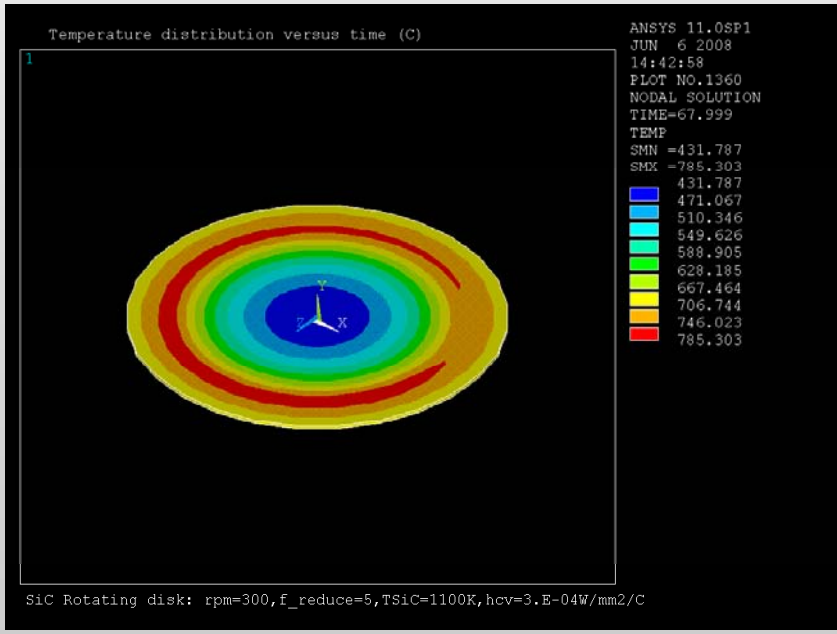

1st attenuator – rotating disk

Influenced parameters

- Diameter of the disk
- Distance between the X-ray beam axis and rotating axis
- Rotating speed

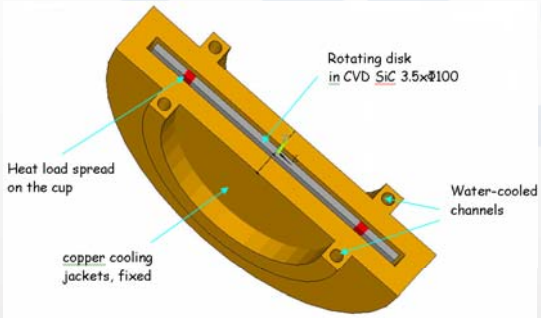

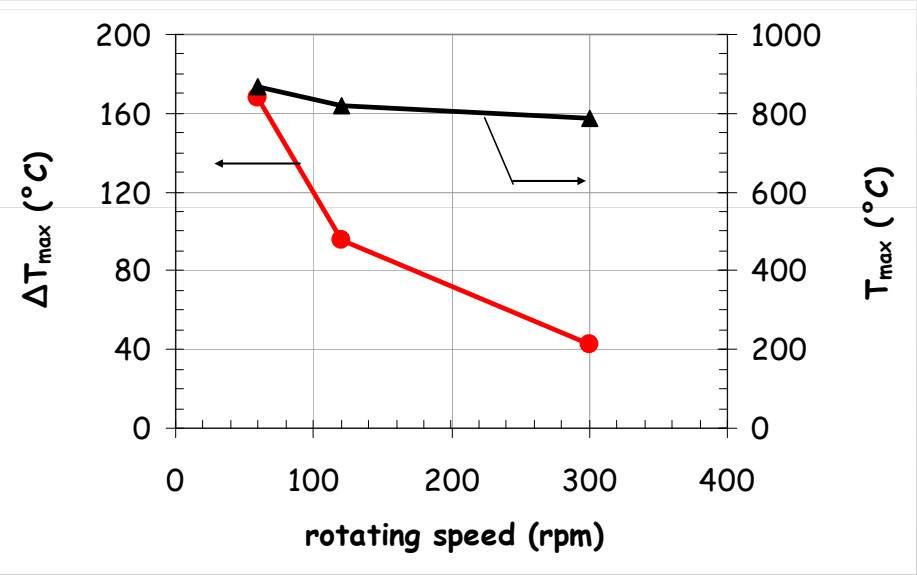

Recommended rotating speed ≧ 300 rpm

Transient temperature of the disk with different rotation speed

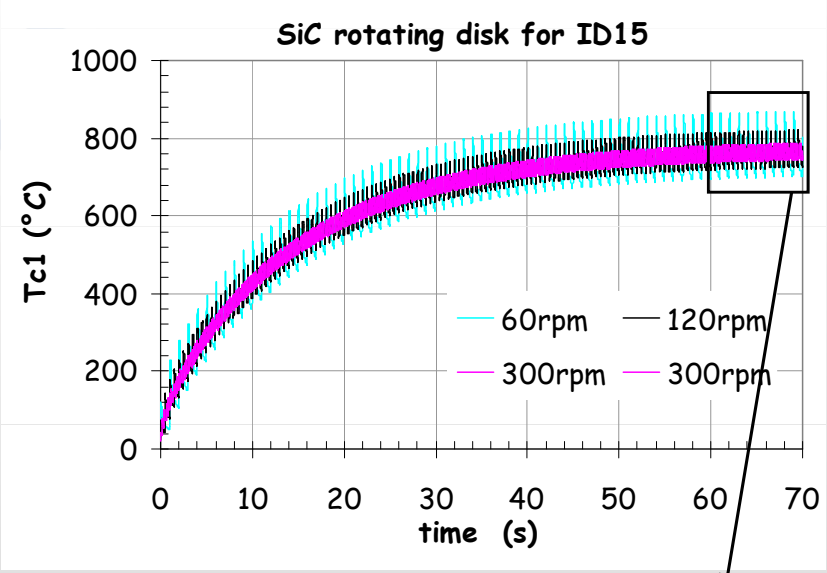

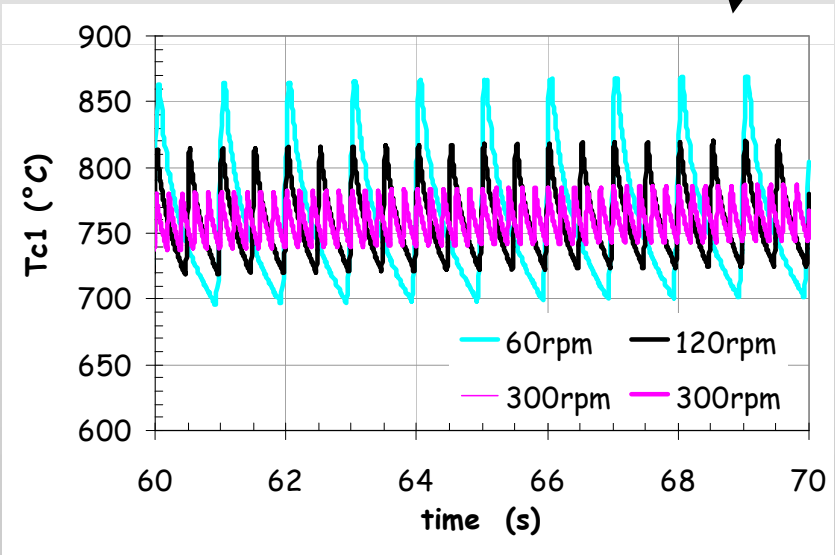

1st attenuator – rotating disk

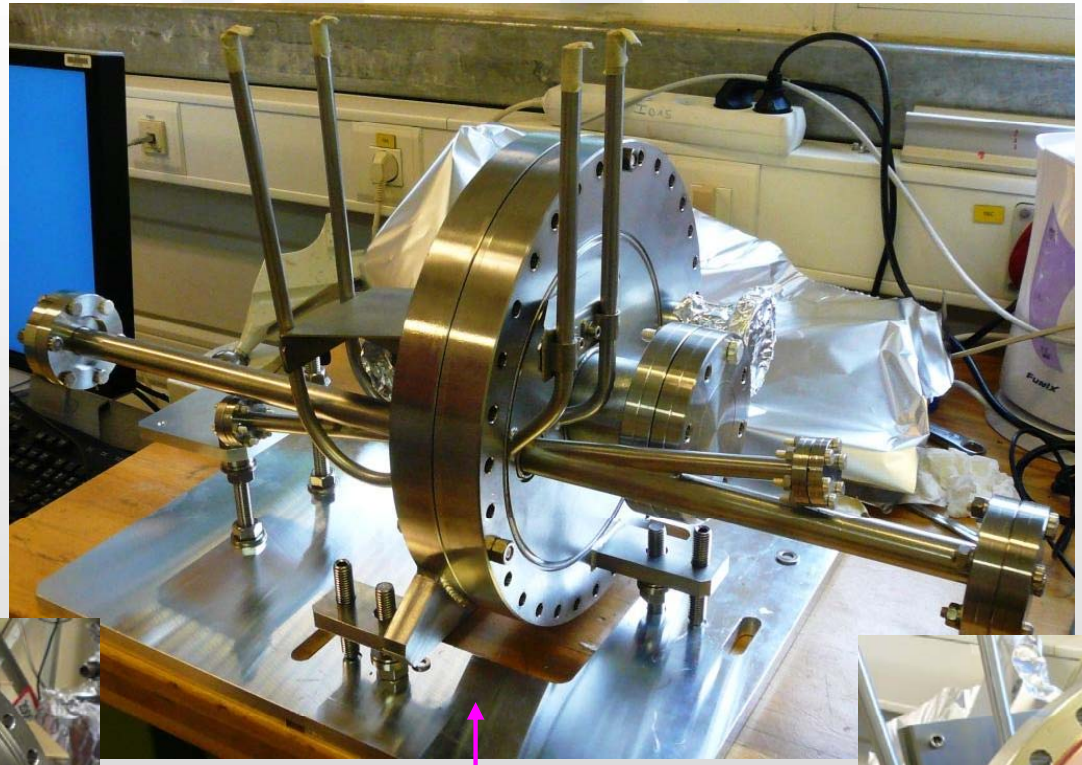

water-cooled
Steel box
Black paint
(Nextel)

For X-ray
beam path

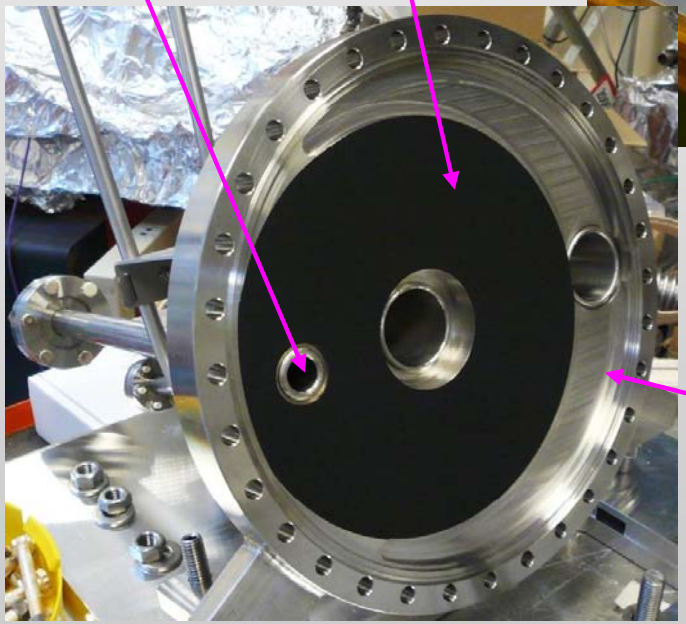

Rotating disk
attenuator assembly

Water cooled box

SiC Rotating disk

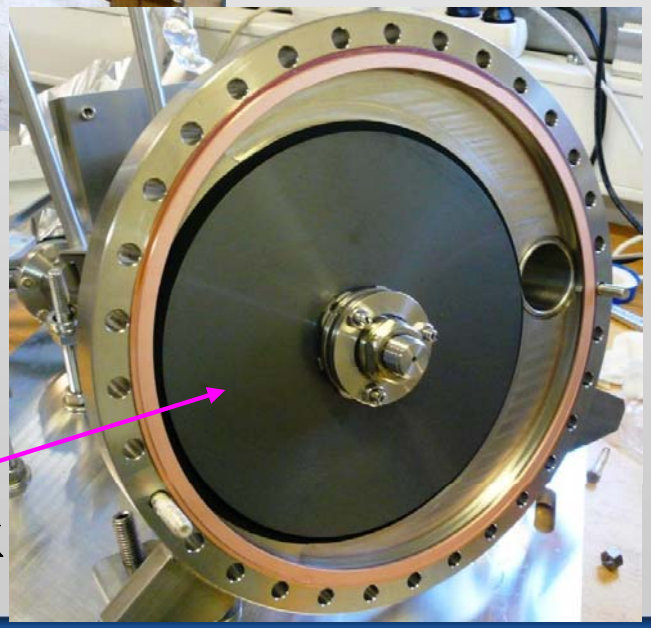

1st attenuator – rotating disk

Water cooling channels

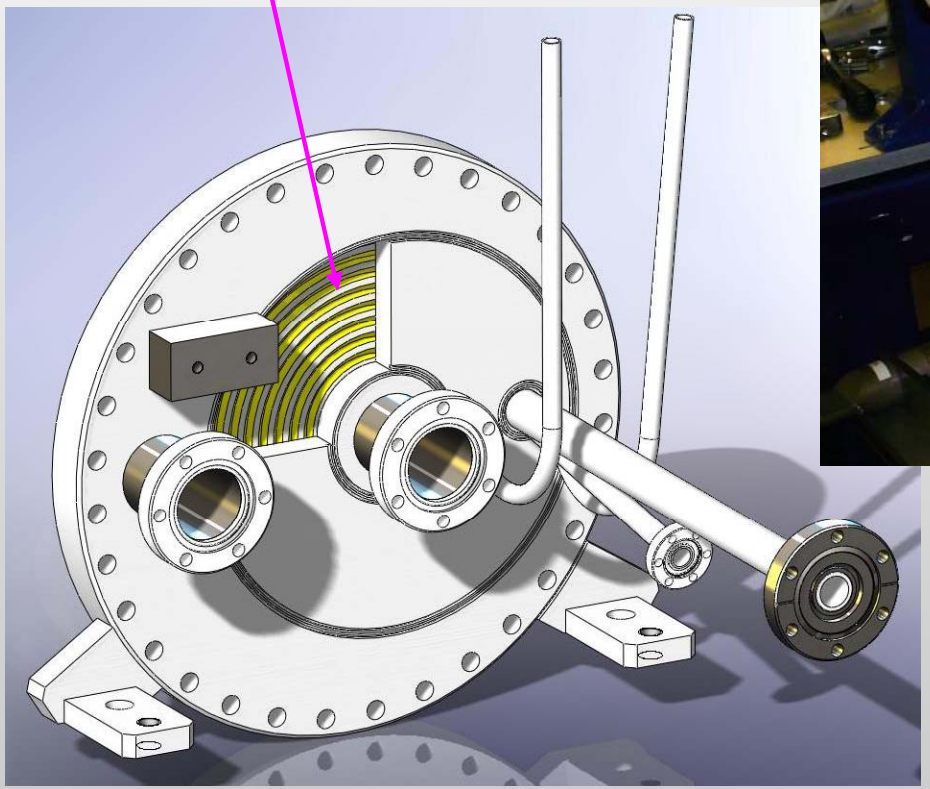

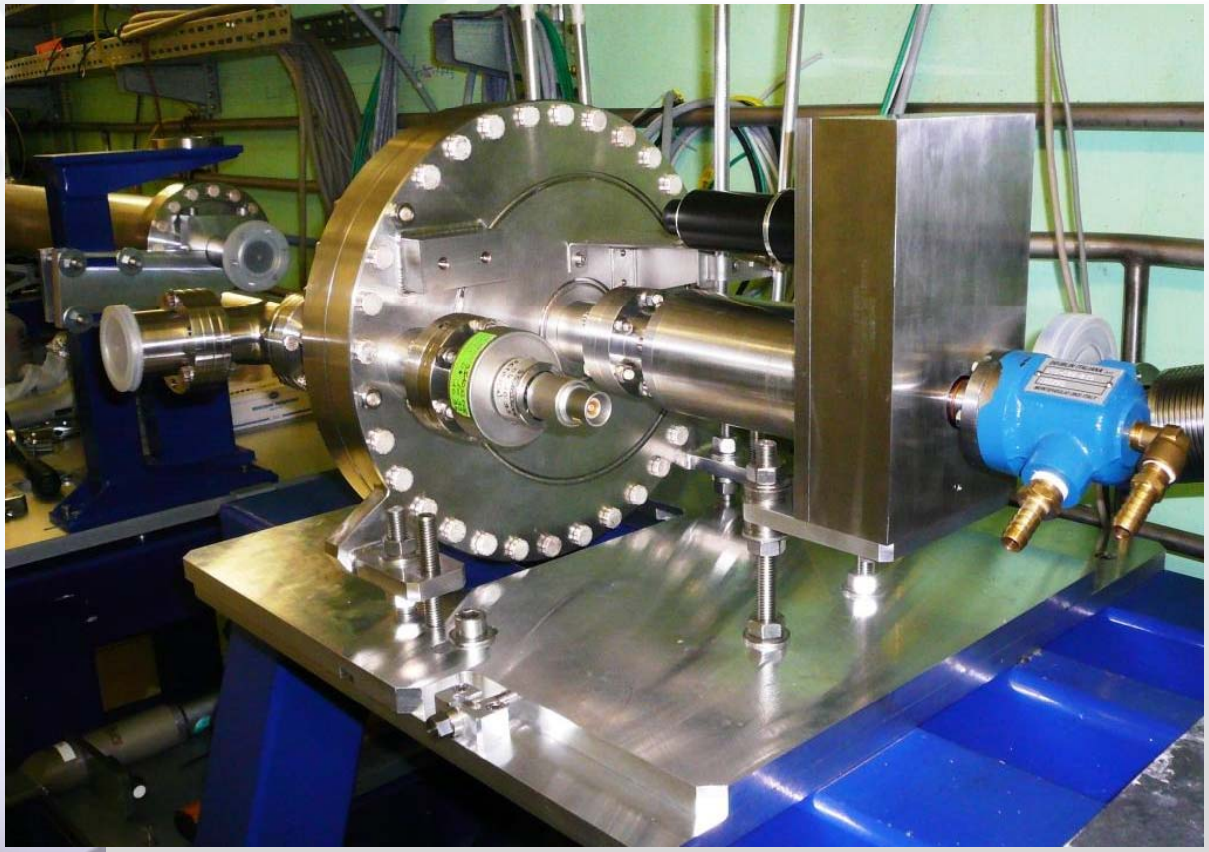

Installing on the beamline

Primary slits – V5

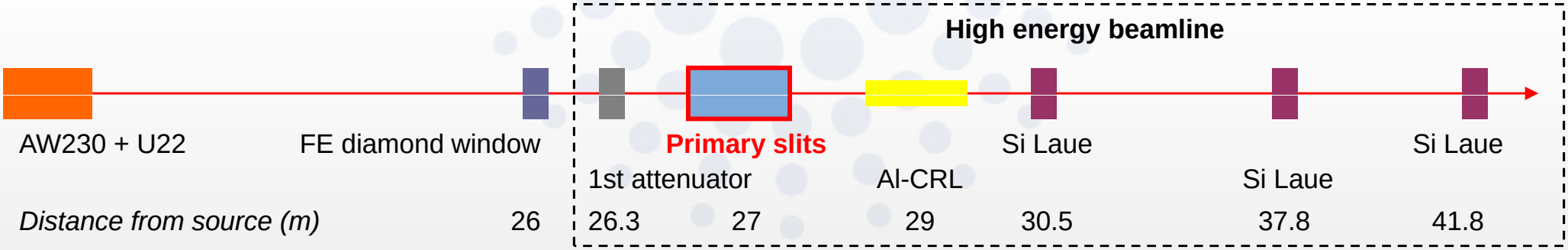

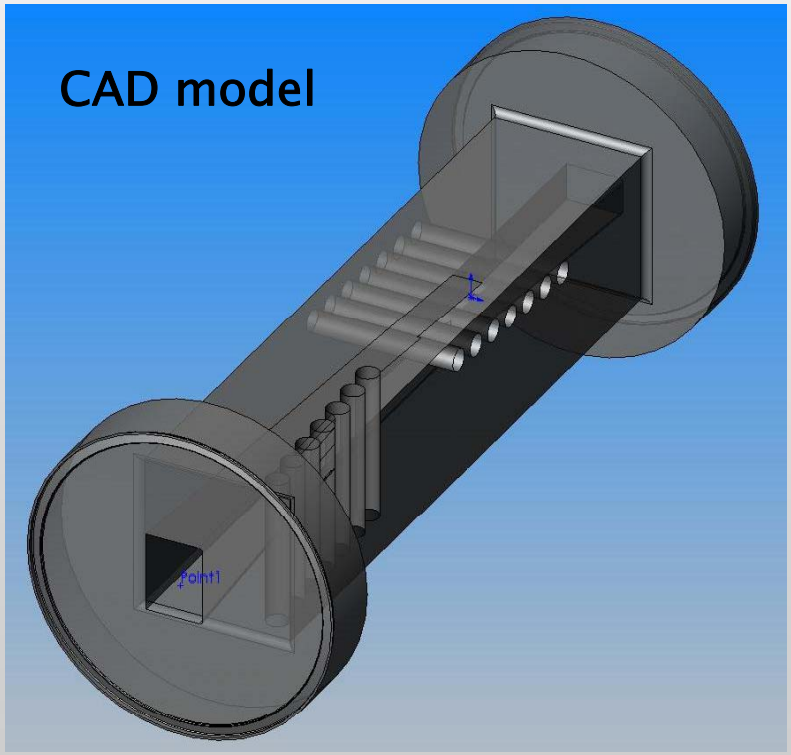

Tungsten Carbide

- Placed after SiC attenuator
- Horizontal and vertical cutting plans shifted in two sections
- Incident power density
  - $Pa_{U22+W230} = 93\ W/mm^2$
  - $Pa_{U22} = 77\ W/mm^2$
- Inclined angle 4° → shorter

Primary slits – V5

FEA model

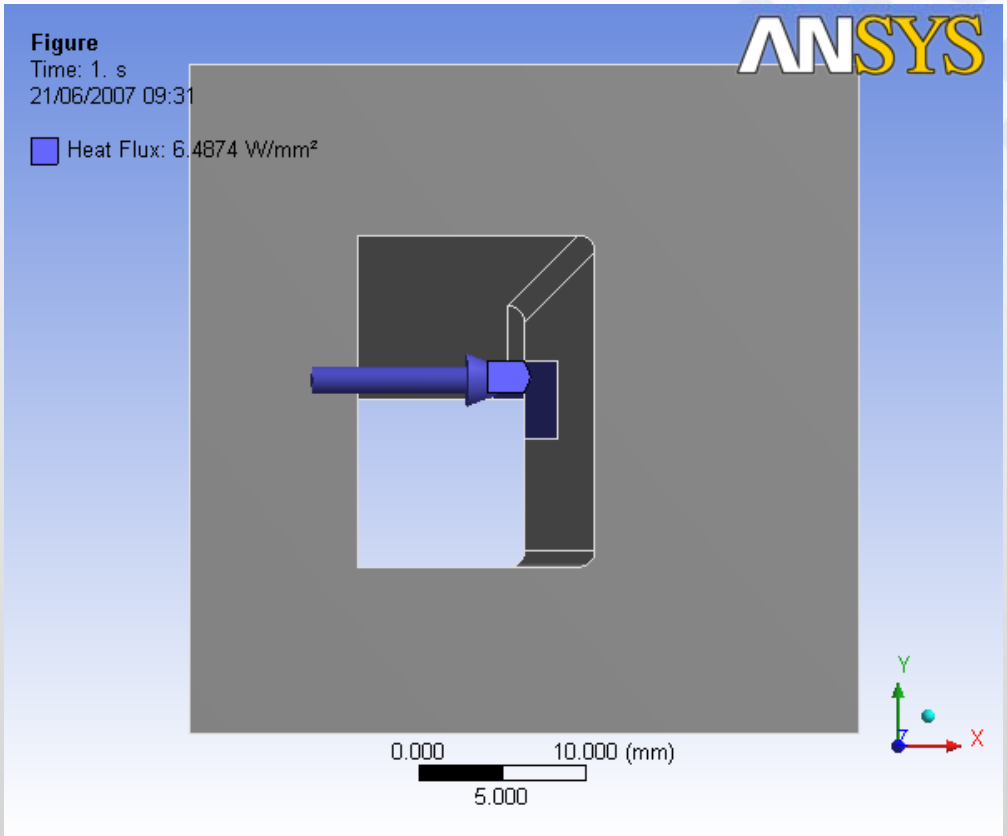

Temperature mapping

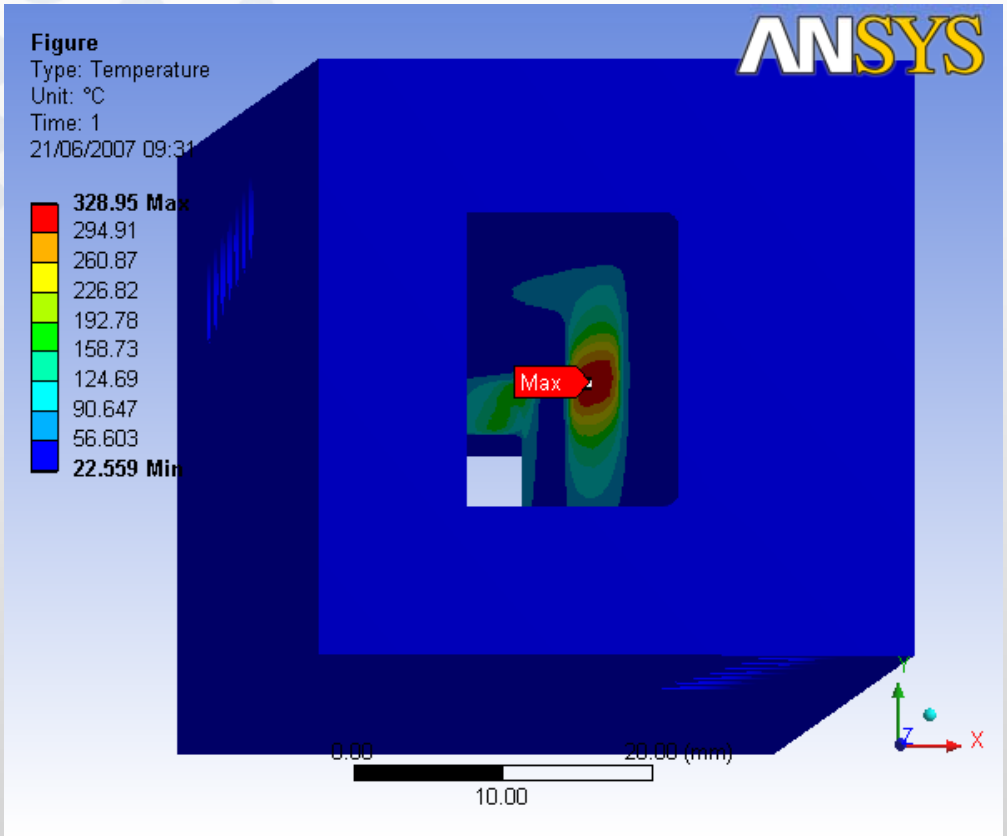

- Heat load from U22+W230 ($Pa_{U22+W230}$ = 93 W/mm²)
- Cooling coef. = 0.015 W/mm²/°C
- T_{max} = 329 °C

Primary slits – V5

Principal stress S1

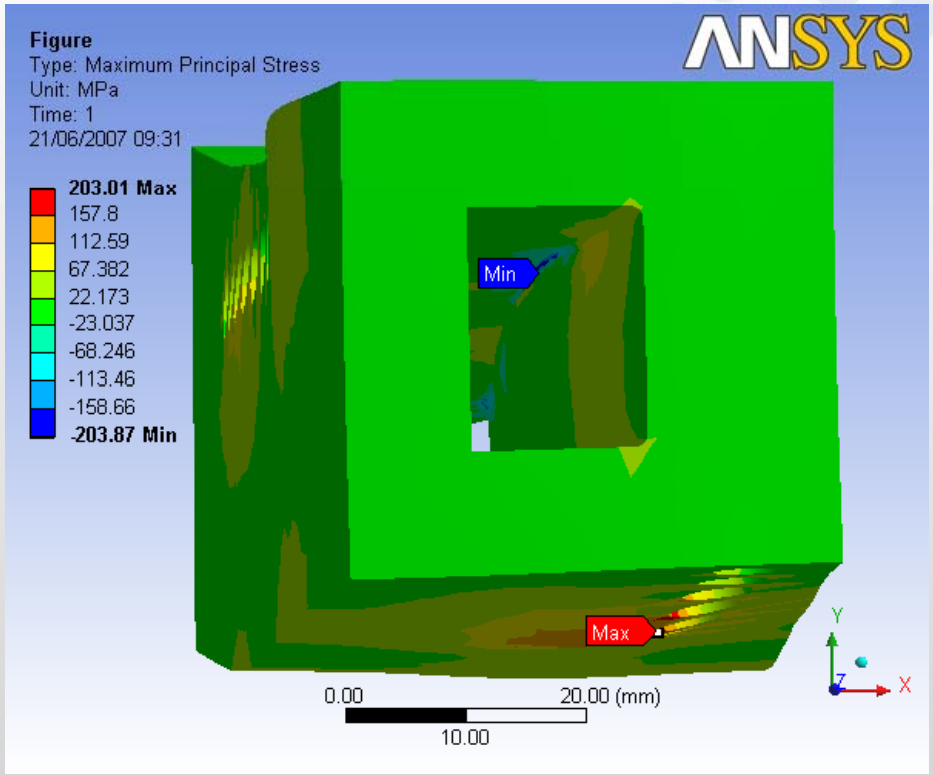

$S_{max-tensil}$ = 203 MPa
< UTS = 344 MPa

stress S3

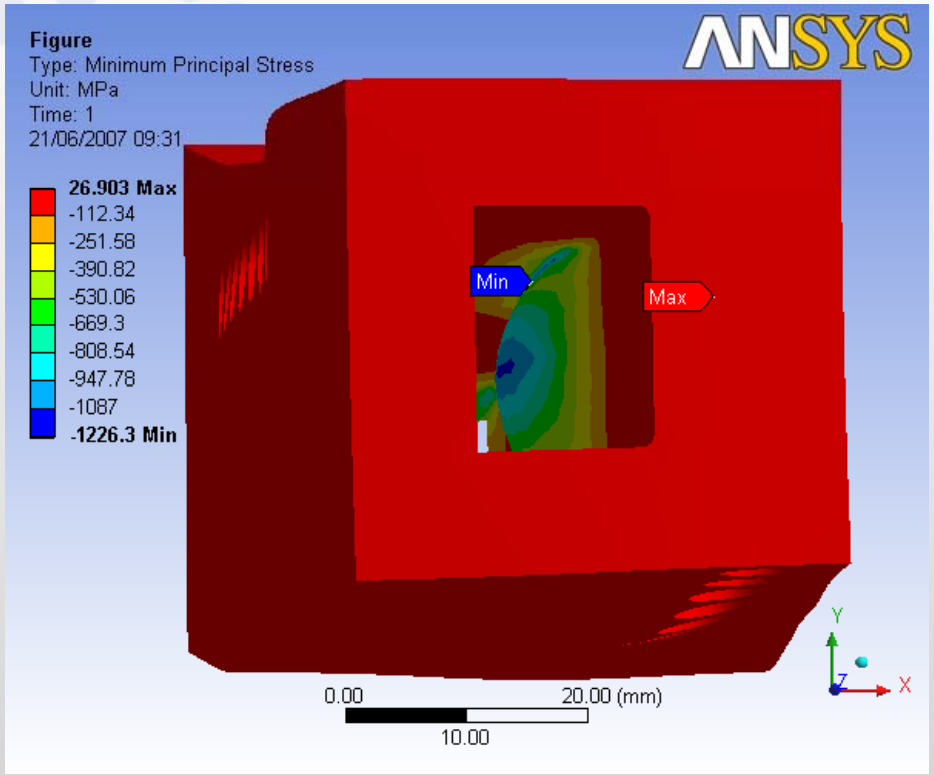

$S_{max-compressive}$ = 1226 MPa
< CYS = 2683 MPa

Al Compound Refractive Lens

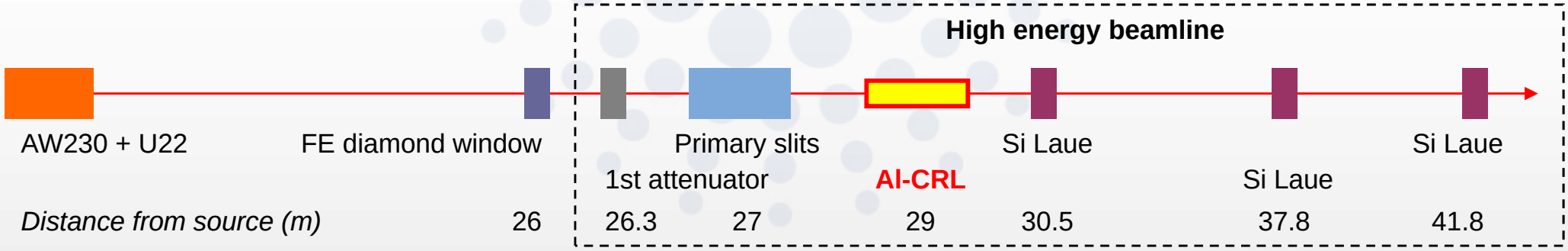

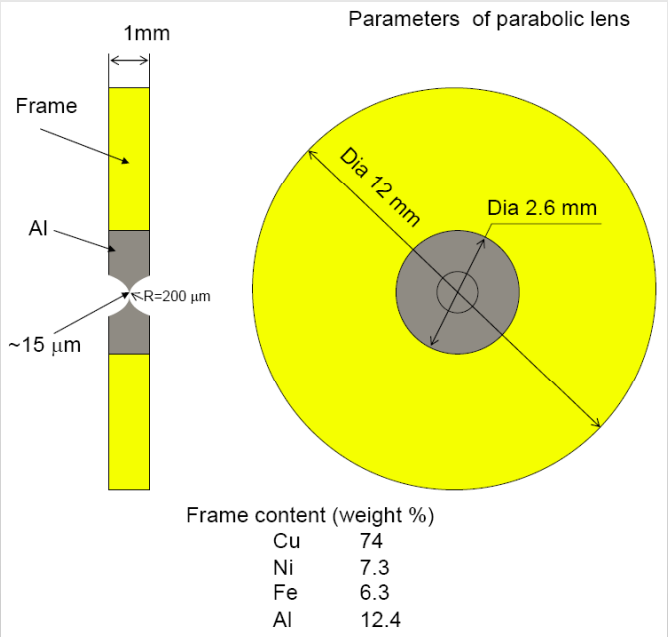

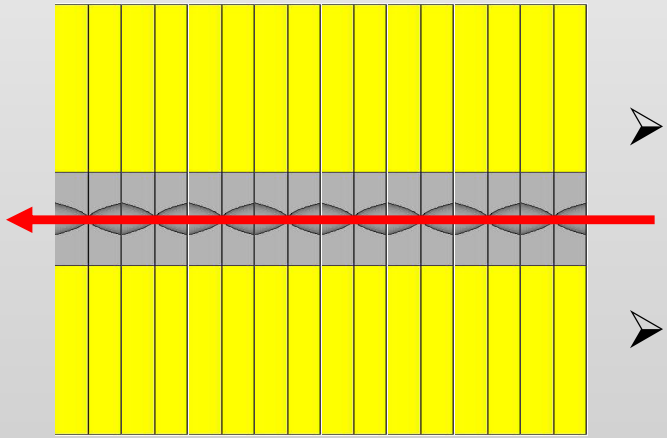

Cooling schemes:

- Side cooling with water cooled copper blocks (h~5000 W/m²/°C)
- Convection cooling on the sides (h~20 W/m²/°C)
- Enhanced convection on the outer ring with thermal radiator,… (h~50 W/m²/°C)

Al-CRL : heat load

Beam size: 0.4 mm x 0.4 mm

Volume absorption

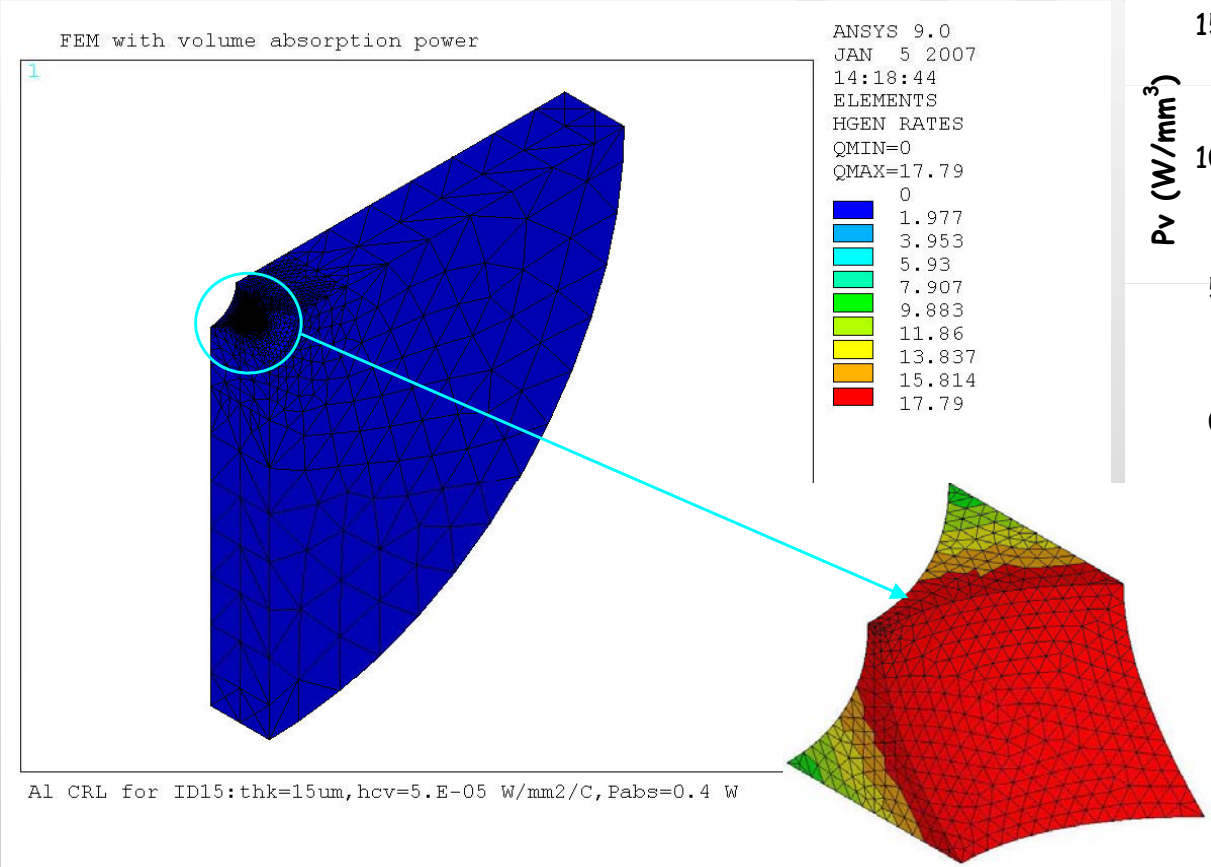

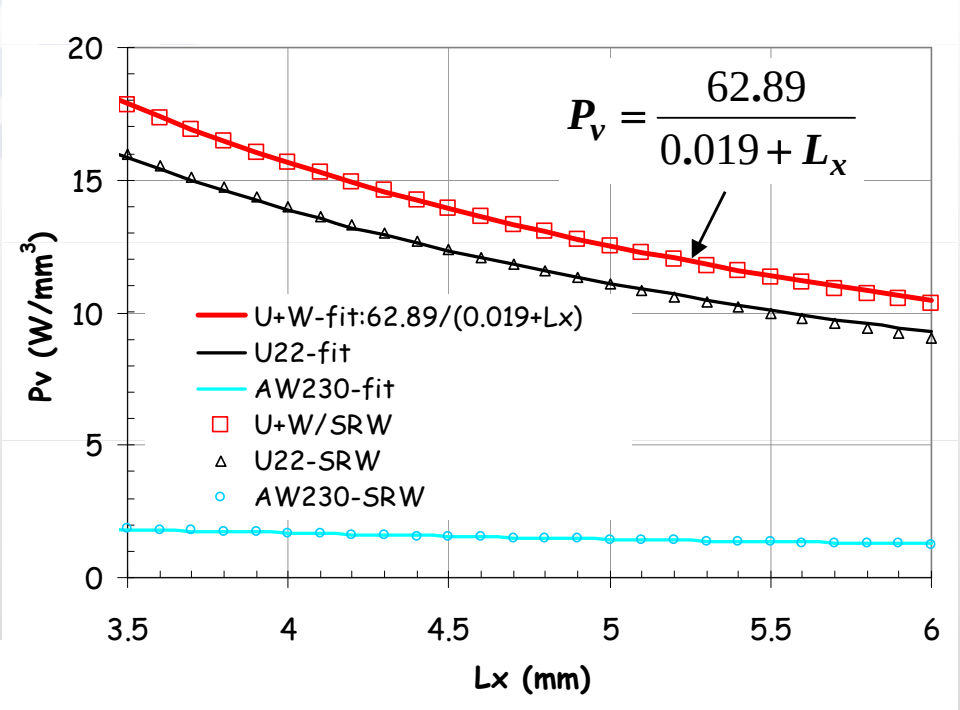

Al-CRL : FEA results (temperature and stress)

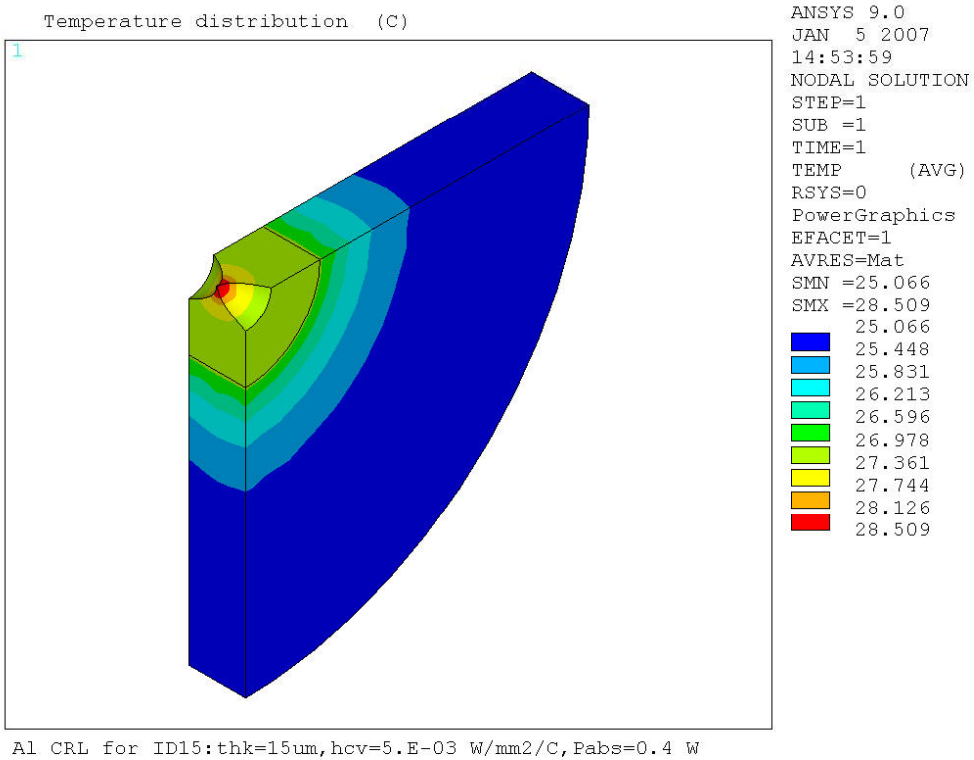

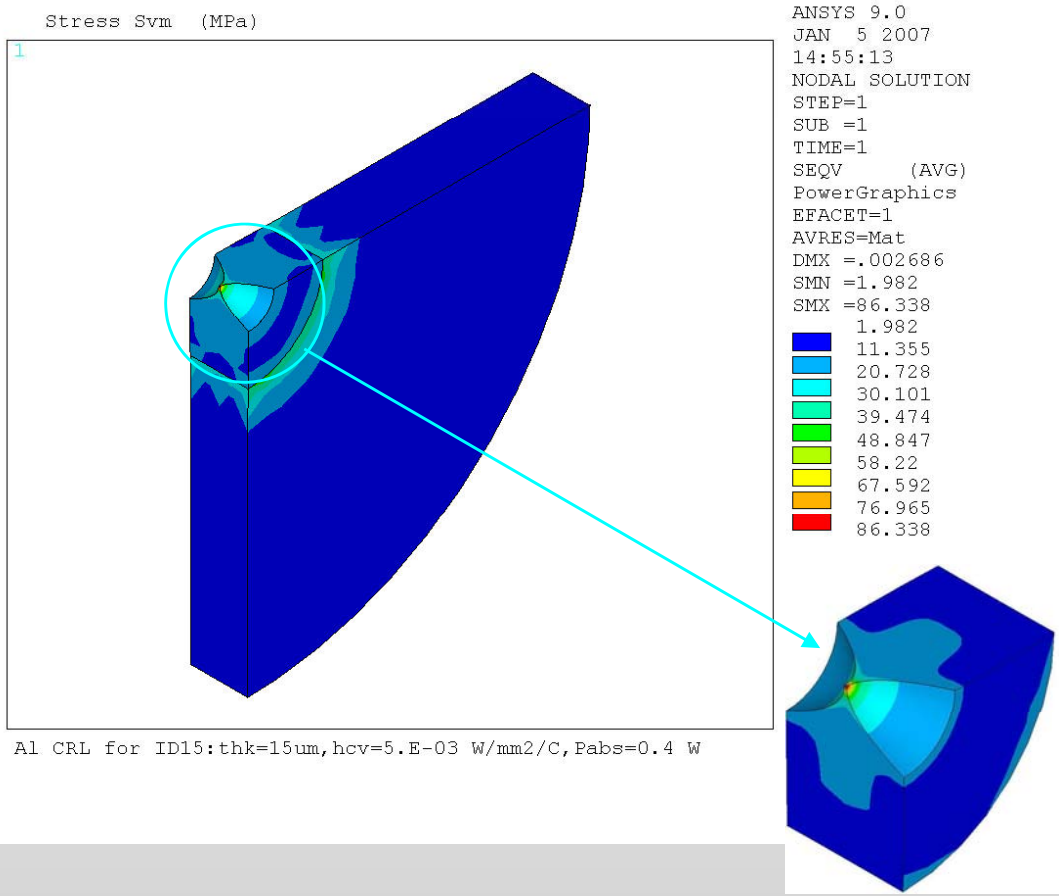

- Al-CRL has to be cooled on the two sides with water cooled copper block
- T_{max}=29°C, S_{max}=86 MPa → **safe**

Al-CRL : final design

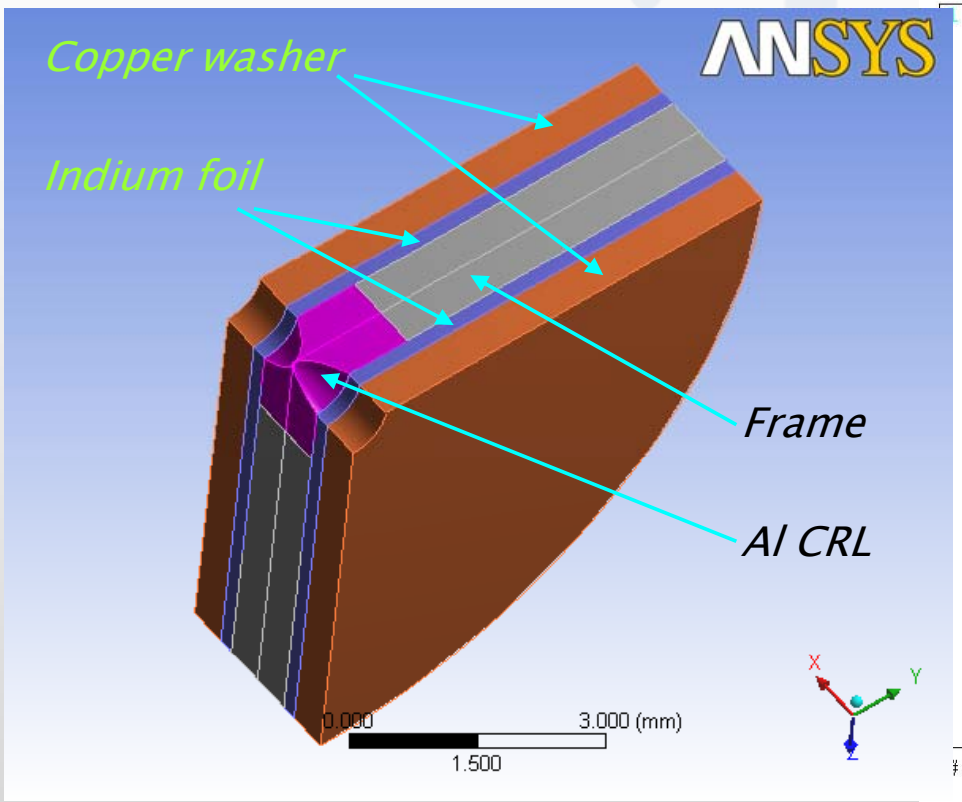

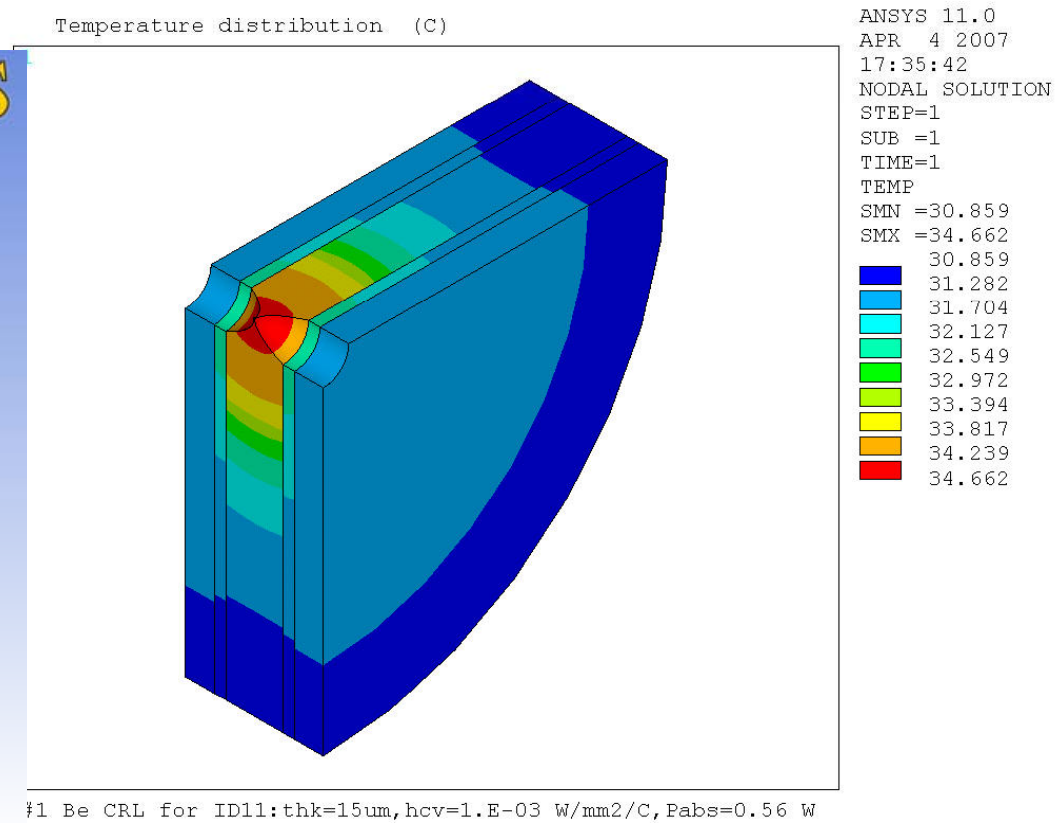

- Cooled on outer ring by water-cooled-copper block in contact
- 1-mm thick copper washer between lenses
- 0.2 mm Indium foil to ensure the thermal contact between lens and copper washer

Conclusion

- Heat load components for ID15 beamline have been reviewed
- 1st attenuator: CVD SiC rotating disk (installed), cooled by thermal radiation
- New HP primary slits in Tungsten carbide (being manufactured)
- Al-CRL: sandwich cooling structure, water cooled on outer ring

Latest news from beamline

rotating disk attenuator

Date: Thu, 12 Jun 2008 00:33:28 +0200 [00:33:28 MEST]
From: Veijo Honkimaki <honkimak@esrf.fr>
To: zhang@esrf.fr
Subject: u22
Headers: Show All Headers

Hi Lin,

I want just to inform you that everything works beautifully! The users start tomorrow morning studies on the buried interfaces and they have 11 times more flux than before using 70keV photons. And the SiC absorber is not broadening the source!!!

Cheers Veijo