Double Crystal Cryo-Cooled Laué Monochromator for use on the I12 JEEP High Energy Beamline at Diamond Light Source.

T. Hill, A. Birt, T. Connolley, M. Drakopoulos, J. Emmins,
M. Harman, D. Sharp, U. Pedersen, G. Wilkin
Diamond Light Source Ltd, Diamond House, Chilton, Didcot, OX11 0DE

Abstract

The I12, Joint Engineering Environmental Process (JEEP) beamline is designed as a multi-purpose, high energy X-ray beamline providing flexibility in the type and complexity of the experiments it can accommodate. These will include ground breaking experiments to simulate the service conditions experienced by real engineering components, while their internal stress state and structures are continually monitored by the X-ray beam.

In order to meet such demanding criteria, a monochromator capable of delivering a large cross section monochromatic beam, up to 100mm wide through an energy range of 50 – 150KeV is required. A cryo-cooled monochromator using a bent Laué-Laué geometry is being designed by the beamline team at Diamond. Of primary importance is the quality of the bend coupled with the thermal management. A typical bend radius of 60m +/-2m over the active area and a heat load of 750 W at 500 mA were specified by the science case. Detailed 3D Analysis of the design was performed combining thermo-mechanical finite element methods in order to see how the crystal would deform under such conditions.

As part of the design cycle, the team at Diamond are building a prototype crystal assembly to prove the bending performance and validate the finite element analysis. Using a full field interferometer the surface of the bent crystal can be studied and verified against the perfectly circular geometry required in the Laué condition. Further testing with the monochromatic beam of B16 Optics beamline at Diamond will also be performed prior to final assembly of the I12 monochromator. JEEP is expected to take first light in March 2009 and the monochromator will be installed and operational ready to start taking beam at this time.

.

Double Crystal Cryo-cooled Laué Monochromator for use on the I12 JEEP high energy beamline at Diamond Light Source.

JEEP, the Joint Engineering, Environmental and Process beamline is a Phase 2 beamline currently under construction at Diamond Light Source Ltd. Due to be completed by October 2009, it will offer a unique facility for the study of high energy science. Figure 1 shows a layout of the beamline optics.

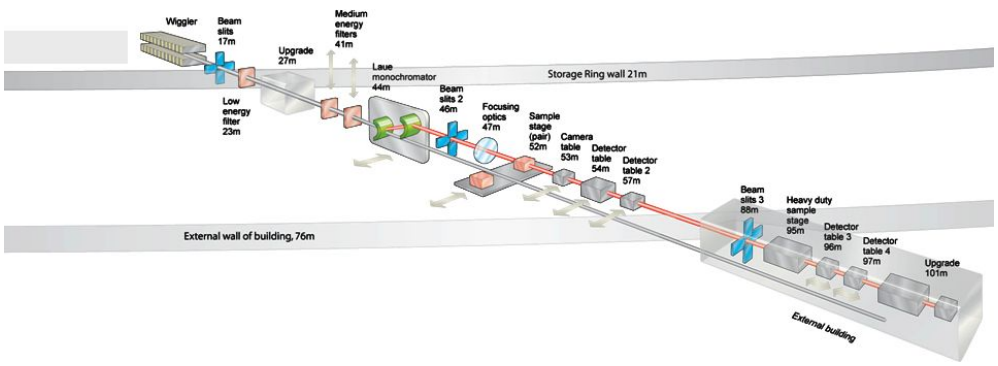

Figure 1: Schematic diagram of I12 Beamline optics.

The Super Conducting Wiggler (SCW) employed by JEEP is capable of producing over 9 kW of power at 500 mA ring current. In order to reduce the power at the monochromator, several filters [3] are employed upstream. Figure 1 shows the energy characteristics of the beamline including the spectrum hardening seen as a result of the filtration. The result of the filtration is to remove the majority of the photons below 50KeV reducing the power at the monochromator to approximately 2.1 kW, of which an estimated 763 W will be absorbed by the first crystal.

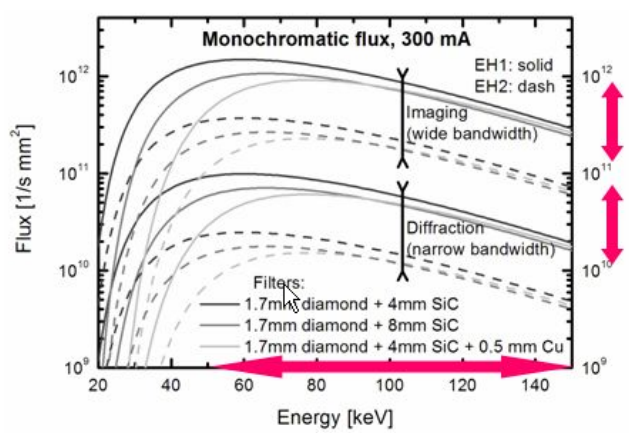

Figure 2: X-ray spectrum characteristics of Beamline I12.

Two bent silicon crystals, the first cryo-cooled to 77 K and the second cooled to 200 K via a thermal braid, will be used in the Roland geometry in order to achieve the maximum monochromatic beam throughput. An offset of 50 mm vertically was employed to allow for sufficient space for the mechanics and to allow the white beam to pass into the beam stop without damaging the second crystal.

The monochromator has a fixed exit design, with the first crystal stationary and the second crystal translating along the beam direction (Figure 3). To maximise the stability of the monochromator, the number of motorised axes was minimised. The first crystal cage has only pitch adjustment, required for Bragg angle adjustment. This decision was taken in order to minimise the effect of any vibrations induced through the cryogenic cooling circuit. The second crystal has pitch, roll, lateral translation and on-axis translation. As before, to minimise the effect of any vibrations in the system the pitch and roll stage have been sourced from commercial suppliers utilising in vacuum radiation hard variants of standard products. The lateral and longitudinal translations are a Diamond in-house design employing Namomotion ™ actuators designed specifically for vacuum and radiation environments. The primary reason for selecting these actuators is their stability once in position, again with a view to minimising potential vibrations.

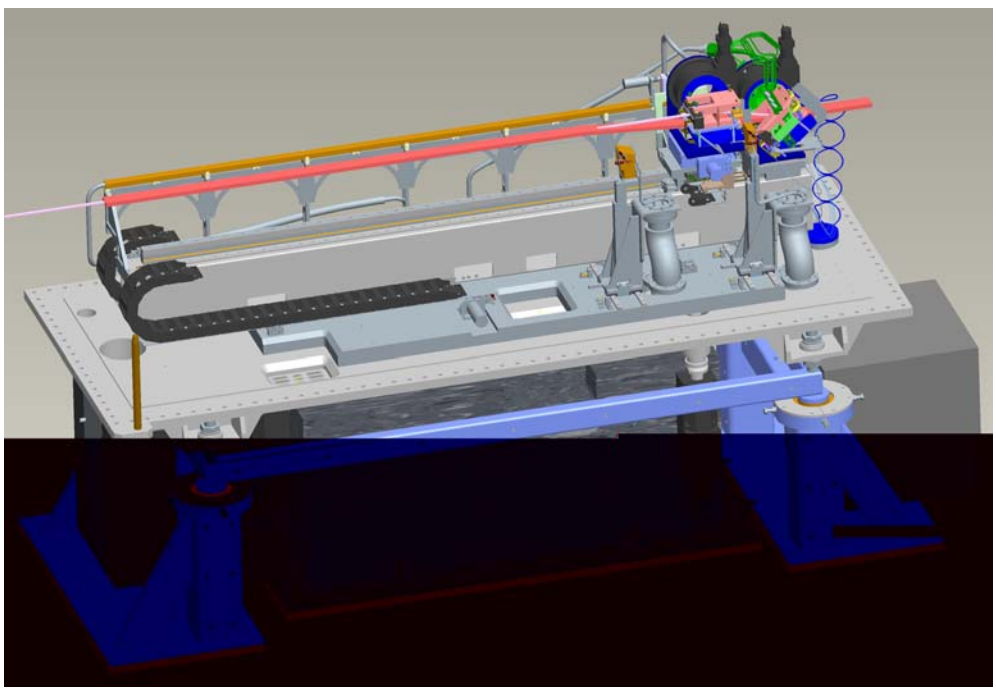

Figure 3: Cut-away view of monochormator vessel, showing crystal cages and long translation for second crystal.

Of all the specifications the monochromator has to meet, the most challenging are those associated with the first crystal. The remainder of this paper concentrates on the design evolution of the first crystal and its bending and cooling systems.

A typical bend radius of 60m with a variation of +/-2m coupled with a heat load of 750 W @ 500 mA resulted in a unique crystal cage design. Initial design iterations focussed on the bending performance and a solution was quickly found.

However, once the thermal aspects of this design were analysed several problems were highlighted. Strain from the clamping of the copper cooling blocks could be seen in the central rib along with significant distortion caused by the differential thermal expansion between the silicon and the copper upon initial cool-down. Therefore a revised design was required which didn't induce strain during the initial cool down and that also allowed a high clamping pressure for the copper cooling plates without inducing strain in the central rib of the crystal. Figure 4 shows the final design of the crystal as delivered by Crystal Scientific in May 2008. By clamping across the thick section of silicon the strain was localised away from the central rib and a high thermal conductance was achieved (estimated to be in excess of 5000 W $mm^{-2}K^{-1}$). 100 μm thick Indium foil was used to improve the contact area and to allow for some differential movement during cool-down to reduce the strain seen in the silicon. After detailed literature search on the subject, a clamping pressure of 1 bar was chosen [1], [2], [3]. This was a compromise between the ideal of 10 bar for full plastic deformation of the indium, and a low enough friction coefficient to allow the copper to contract with respect to the silicon during cool-down.

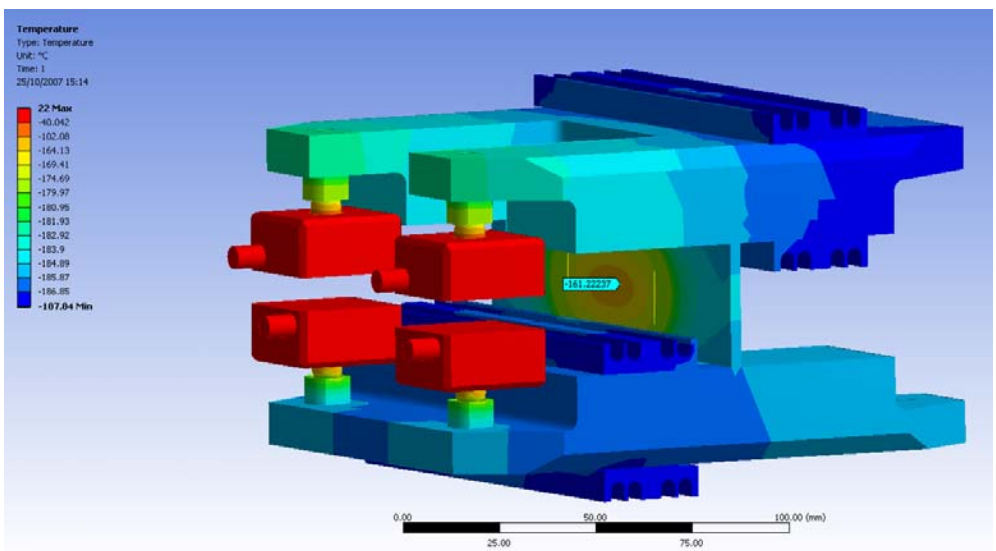

Figure 4: Final design of crystal with bending actuators and cooling clamps.

Even with the small parasitic thermal load from the actuators, FEA modelling predicts that the crystal is almost perfectly isothermal at cryogenic temperatures with no incident X-ray beam. This ensures that the action of the actuators is the only force creating any distortion in the crystal and therefore provides the best conditions with which to achieve the cylindrical bend.

Under the full thermal X-ray load of 750 W, the maximum temperature at the centre of the crystal rib was predicted to be 135 K. Note the Day 1 operating ring current for I12 will be 300 mA, which results in a heat load of 450 W and a maximum temperature in the crystal rib of 112K, as shown in Figure 4.

For the crystal bending, two custom designed in- vacuum actuators from Queensgate™ are used (Figure 5) These have a maximum stroke of 500 microns and exert a maximum force of 95N. The

actuators have built-in capacitive sensors to monitor their extension. Under closed-loop control the minimum incremental step size is 10nm.

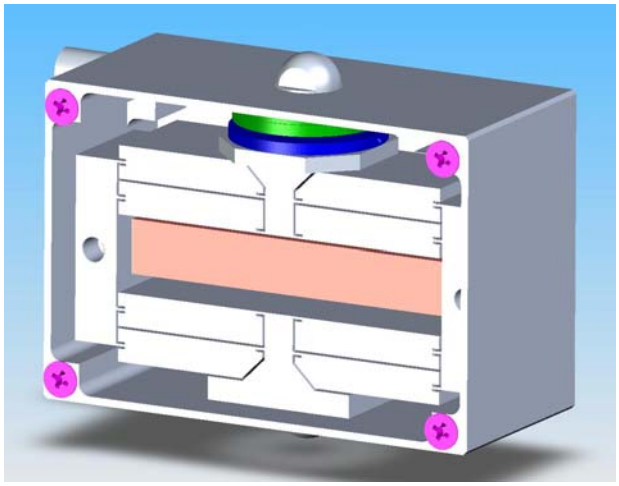

Figure 5: Piezo actuator for crystal bending.

The crystal assembly also includes a pair of capacitive sensors mounted directly opposite the actuators to record the amount of actuation during bending. These sensors are required because it is foreseen that the actuators will cool down slightly due to their contact with the cooled silicon. The cooling may result in a reduction in stroke, but more importantly, it may affect the accuracy of travel reading. The additional capacitive sensors are designed to work at 77K and will offer more reliable and consistent measurement of the actual bending the crystal is undergoing.

Figure 6 shows the full crystal assembly, including the rotary stage for setting the Bragg angle, the cooling system and Compton shielding. The Compton shield is included to minimise unwanted heating of other components, particularly the second crystal, by scattered X-rays.

Comment [TC1]: Hi Tim, could you insert a few words about the secondary cooling circuit for the stage and Compon Shield?

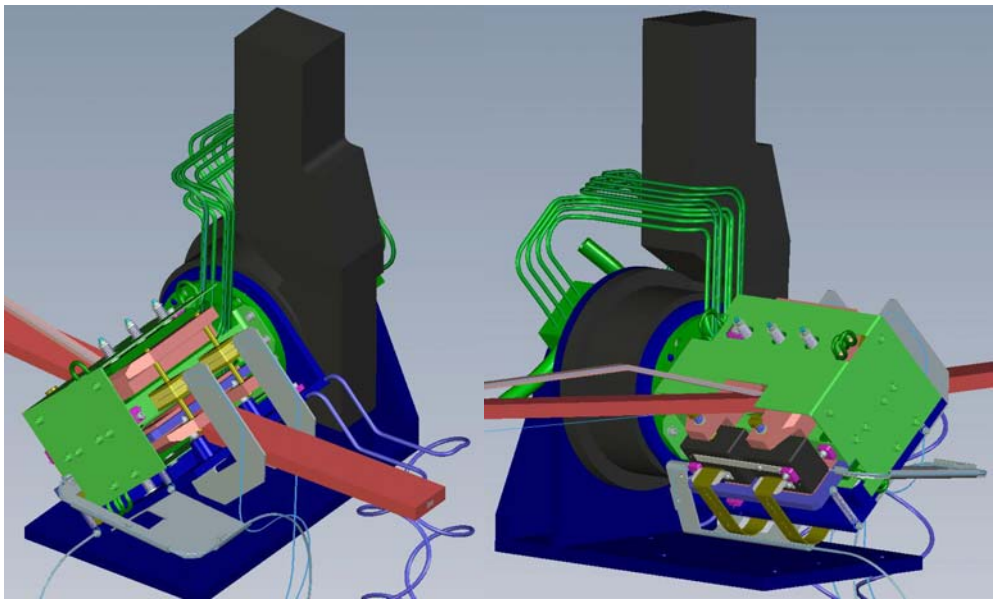

Figure 6: Full assembly of Crystal 1 cage.

At the time of writing, a dummy aluminium crystal has been made and the actuators fitted allowing verification of their performance at room temperature in air, (Figure 7). Using a dummy crystal enables us to test the actuators and practice assembly procedures before building up the real crystal cage. The first silicon crystal has also been delivered to Diamond. It is currently undergoing interferometry measurement of the surface roughness and geometry to check it meets the required specification.

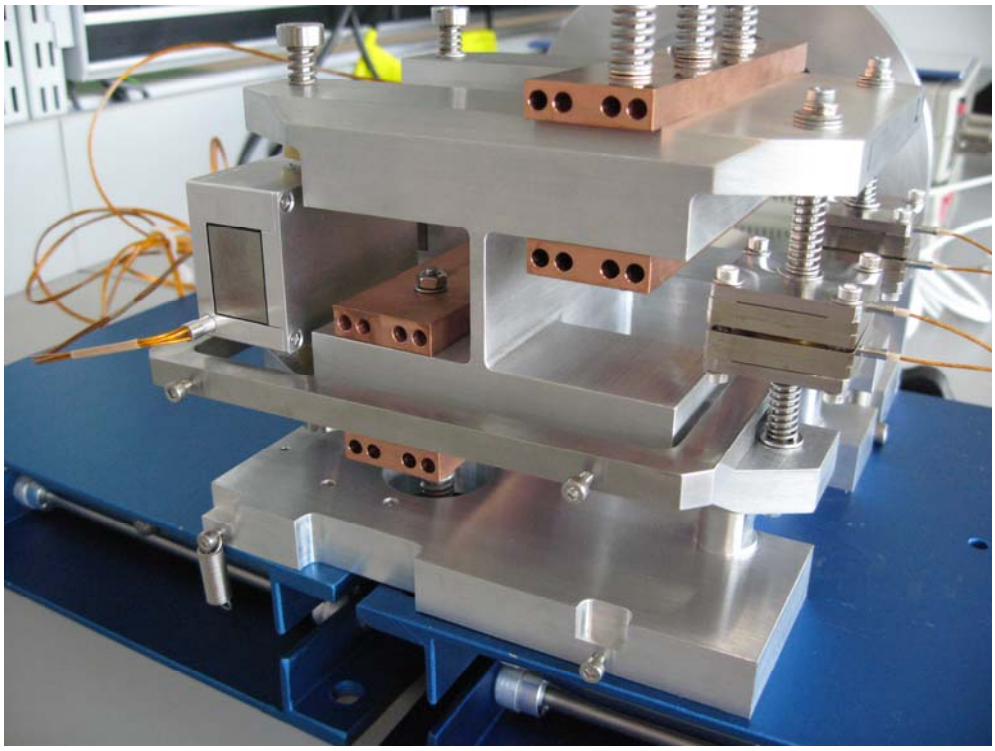

Figure 7: Dummy crystal made of aluminium, with actuators under test.

Once the crystal has been checked, it will be built up as a full assembly and again placed on the interferometer for analysis of the bending performance. This will verify the FEA performed but also aid understanding of the actuator/capacitive sensor performance. Following the interferometry tests of the bending quality, the full crystal assembly will be tested with monochromatic X-rays on Beamline B16 at Diamond. Second crystal assembly is expected to follow soon after.

The design of the second crystal bending and clamping system is similar to that of the first crystal. The motions of the second crystal are more complicated because it includes the pitch, roll and yaw adjustments necessary for obtaining optimum diffraction conditions, and the long translation necessary for the fixed exit condition.

Comment [TC2]: Tim, do you want to say a bit more here about the second crystal?

I12 is due to take first light in March 2009. The beamline team are confident the monochromator will be installed and ready for commissioning with X-rays by then. We plan to report on the construction and testing of the full monochromator in future publications.

1, J. Yu, A. L. Yee, et al. (1992). "Thermal conductance of Cu/Cu and Cu/Si interfaces from 85 K to 300 K." Cryogenics **32**(7): 610-615.

2, E. Gmelin, E., M. Asen-Palmer, et al. (1999). "Thermal boundary resistance of mechanical contacts between solids at sub-ambient temperatures." Journal of Physics D: Applied Physics(6): R19.

3, P. Marion, L. Zhang, et al. (2006). Cryogenic cooling of monochromator crystals: Indirect or direct cooling? MEDSI, Spring8, Japan.