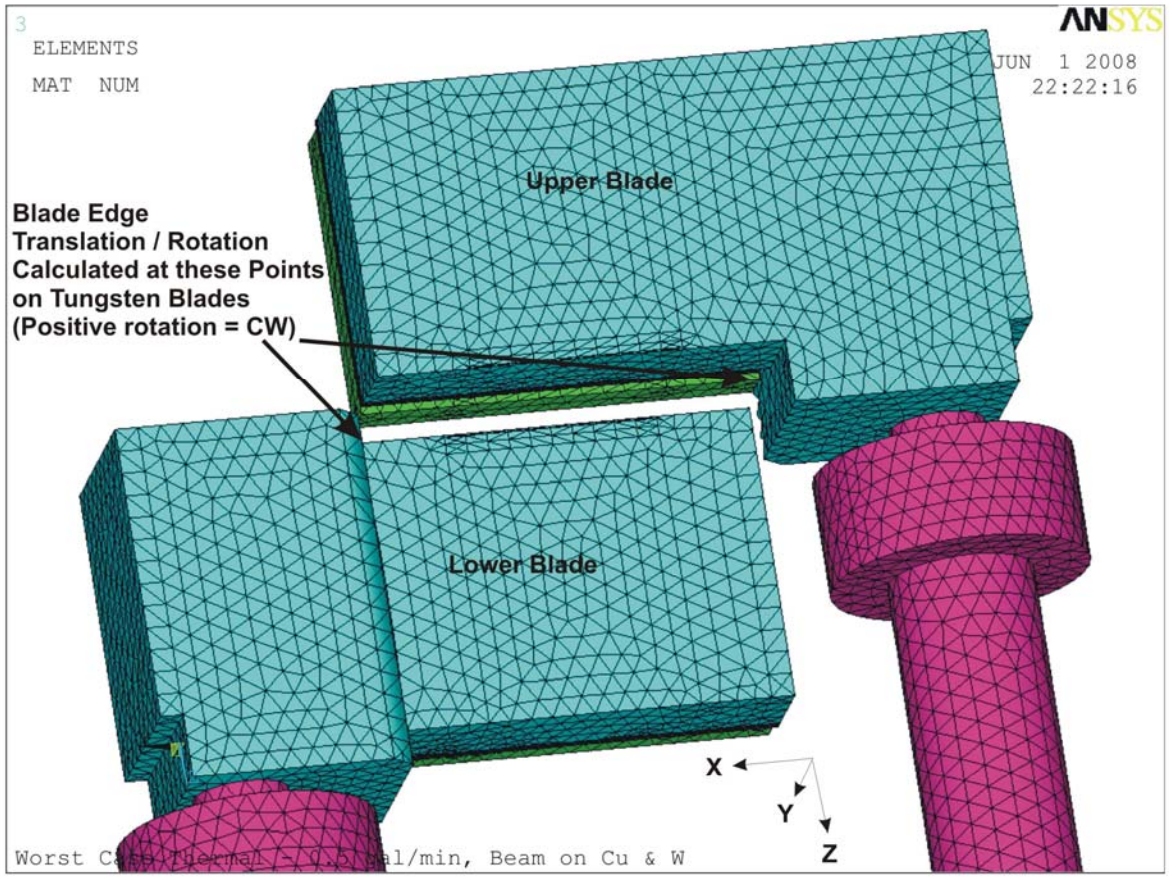

Presented by:

Alexander Deyhim

High Heat Load High Precision Slits

for the MAX Lab Multi-Pole Wiggler

25-April-07

MEDSI/Pan-American SRI 2008 Meeting, June 10-13, 2008

High Heat Load High Precision Slits

- Heat Load/FEA
- Mechanical Design/Precision
- Blade Quality
- Blade Parallelism
- Stability/Vibration
- Miscellaneous

Heat Load/FEA

A thermal / mechanical analysis has been performed on the water cooled secondary slits for Max Lab. Results show that, for a nominal power density of 30 W/mm2, applied evenly over an area of 70 mm2 between upper and lower slit edges, the deformation of the upper and lower slit edges is typically less than 15µ.

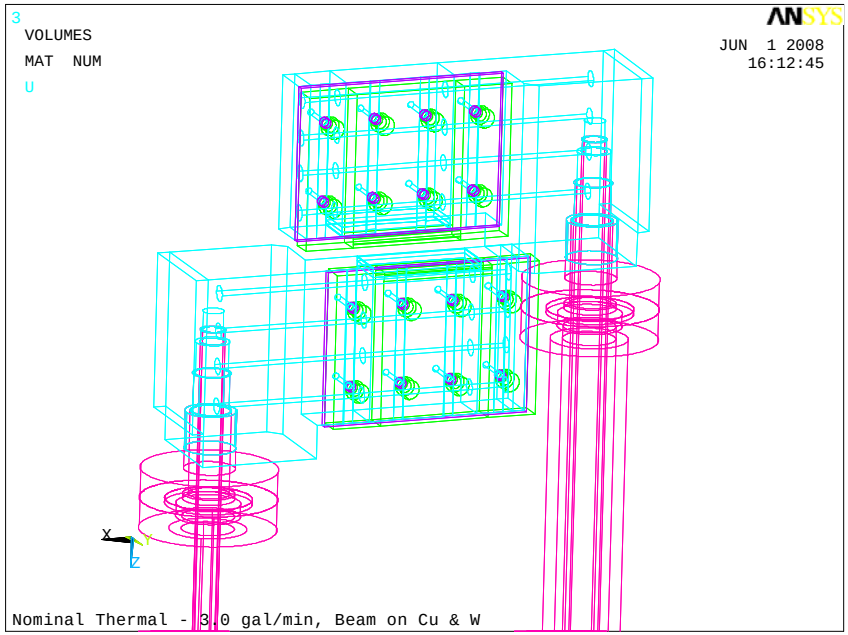

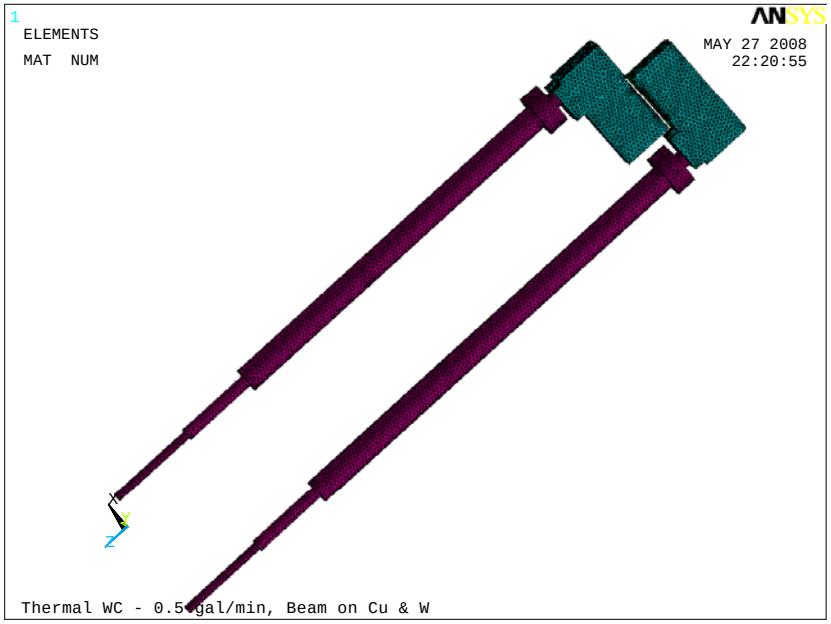

Water cooled slit finite element model / geometry

Assumptions (Cooling)

ANSYS 8.1 ® was used for the steady state thermal and mechanical simulations presented herein. Approx. 150,000 - quadratic tetrahedral, pyramid, and hexahedral elements were employed to model the water cooled slits assembly. Thermal contact resistance and mechanical contact at the bolted interfaces (tungsten blade / macor insulator and macor insulator / copper cooling block) were simulated with surface-to-surface contact elements. Calculations for thermal contact resistance were based on an average contact pressure of 176 psi due to tightening of the eight tantalum bolts to a torque of 0.18 – 0.22 Nm.

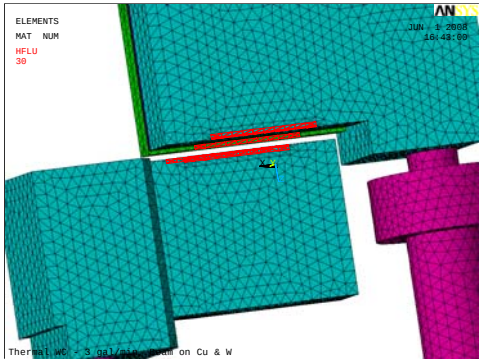

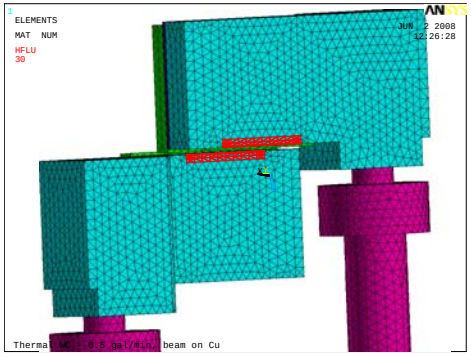

Finite element model depicting areas of applied heat flux (30 Watts/mm2); (a) – Nominal condition, 1050 watts per blade centered on blade overlap – 28mm x 1.25mm, (b) – worst case condition, 2100 watts per blade applied totally on the copper cooling blocks.

Thermal Results

- The results indicate that as long as the flow is turbulent (< 0.45 gpm, see attachment), the tungsten blade temperatures do not significantly vary (<25°C) over the range of flow rates evaluated.

- Under nominal heat loading, overall translation of the opposing blade edges varies by about 20µ over a flow range of 0.5 – 3.0 gpm. Blade edge deformation is essentially unaffected by the evaluated cooling water flow rates.

Mechanical Design/Precision

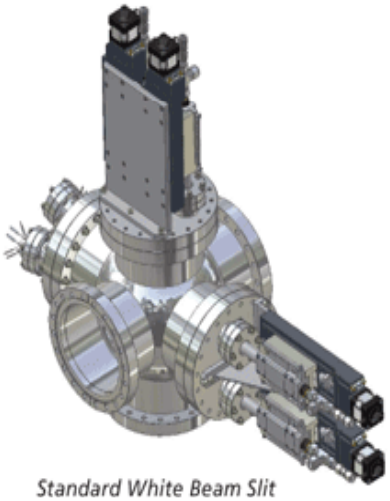

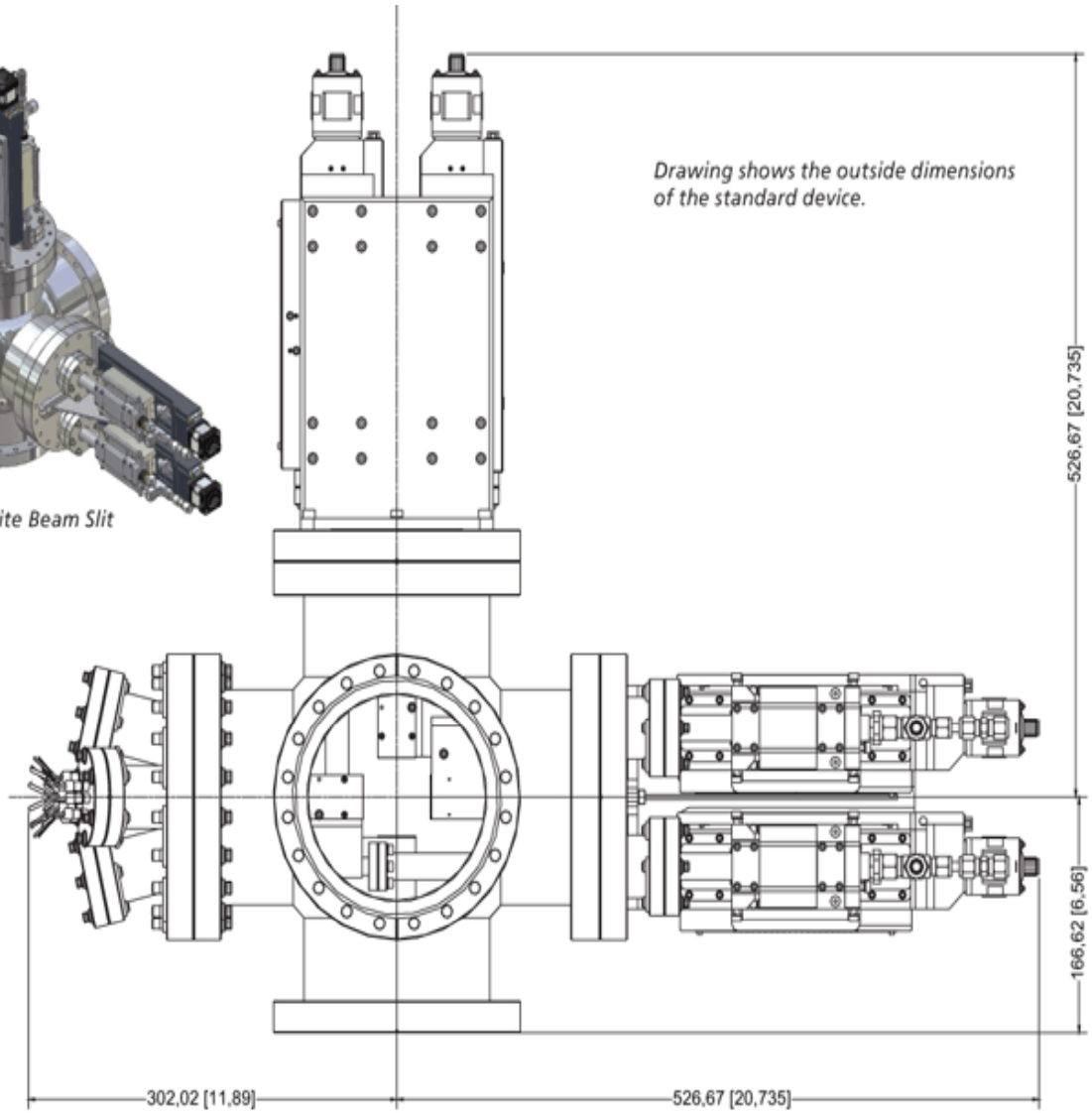

1. Micron precision
2. Encoder option
3. Ability to monitor the beam
4. Best slit blade knife-edges in the synchrotron community!!!
5. Blade material; Tungsten or Tantalum
6. Blades can go "past closed" without clashing (Overlapping/Zero beam).

Actuators

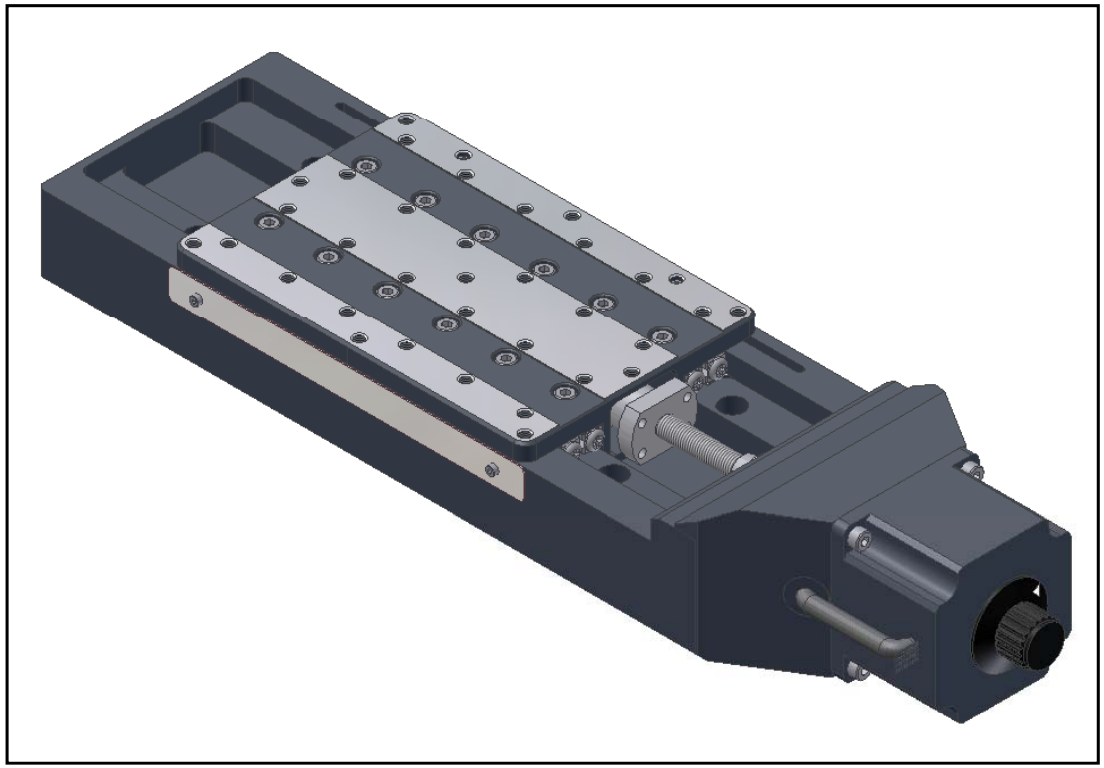

This linear actuator provides an open loop positioning accuracy of 5um per 25mm and a closed loop positioning accuracy of up to 3um per 1000mm. Linear accuracy if assured by the highest precision crossed roller linear bearings with straightness of travel up to 2um per 100mm of travel.
The standard DS200-150-E actuator uses a 200 step per revolution NEMA14 motor with 10% step angle accuracy. The modified version for use in the white beam slits employs a 400 step per revolution NEMA 17 motor. Coupled with a 1mm lead preloaded class T7 provides a full step resolution of 2.5um and a half step resolution of 1.25um with 10% accuracy.

Bakeout

1. One key feature of ADC's white beam slits is the ability to remove the actuators in approximately 10min for bakeout with the ability to replace them in an equal amount of time within microns of their original position This allows for easy vacuum system maintenance while preserving the accuracy of the system.
2. Using a three-point mount, the actuator weldment engages the main feedthru flange in a kinematically determinate fashion that provides quick removal and attachment. A pin and slot, pin and hole, and three flat surfaces locate the support weldment on the feedthru plate.

Figure 1: Actuator Coupling Assembly

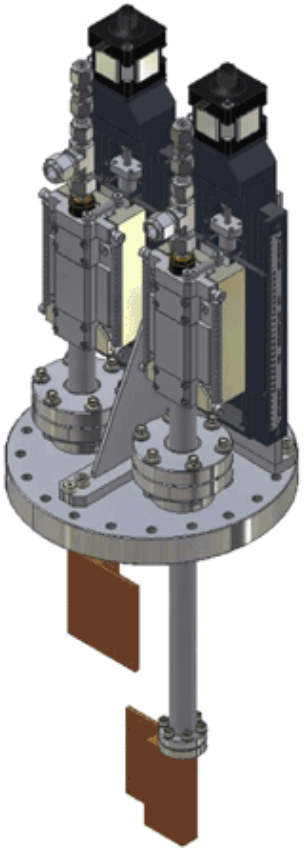

Figure 2: Coupling

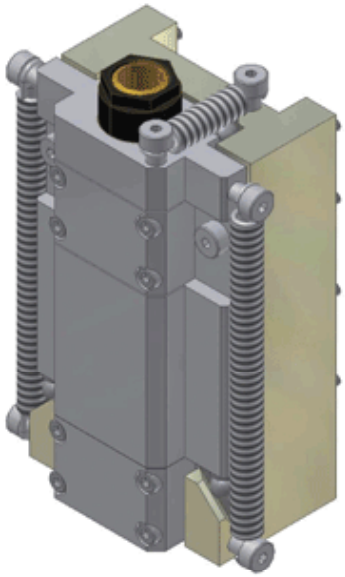

Stands

1. A typical support structure for slit mechanisms is comprised of welded tubular steel with a powder coated finish. Each segment of the structure is filled with sand to increase the mass and add viscous damping component to the system to attenuate high frequency vibrations.
2. Each stand is supplied with mounting feet having integral adjustability in all three axes. Typical travel for each motion is +/– 12.5mm and more can be supplied upon request.

Blade Polishing

ADC can achieve an excellent surface finish when polishing Tungsten or Tantalum blades for slits as shown in the figures that follow. This does not, however, guarantee that the slit will be satisfactory. The two faces that form the knife-edge may be completely free of scratches or nicks but will still cause diffraction if there is any radius.

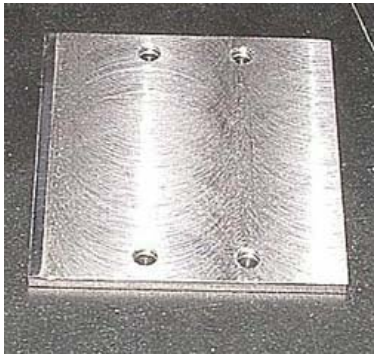

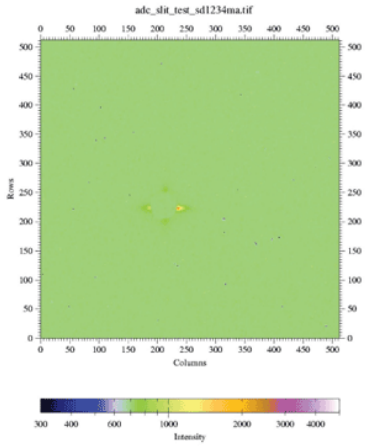

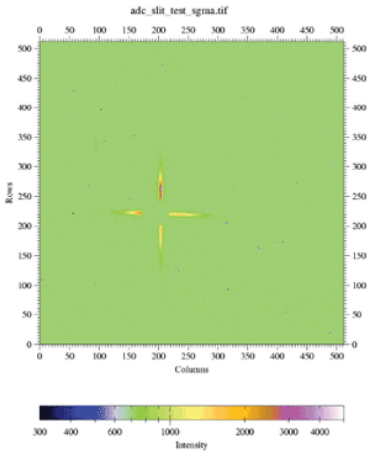

http://www.adc9001.com/index.php?src=09-testing-quality

UHV Monochromatic Slits

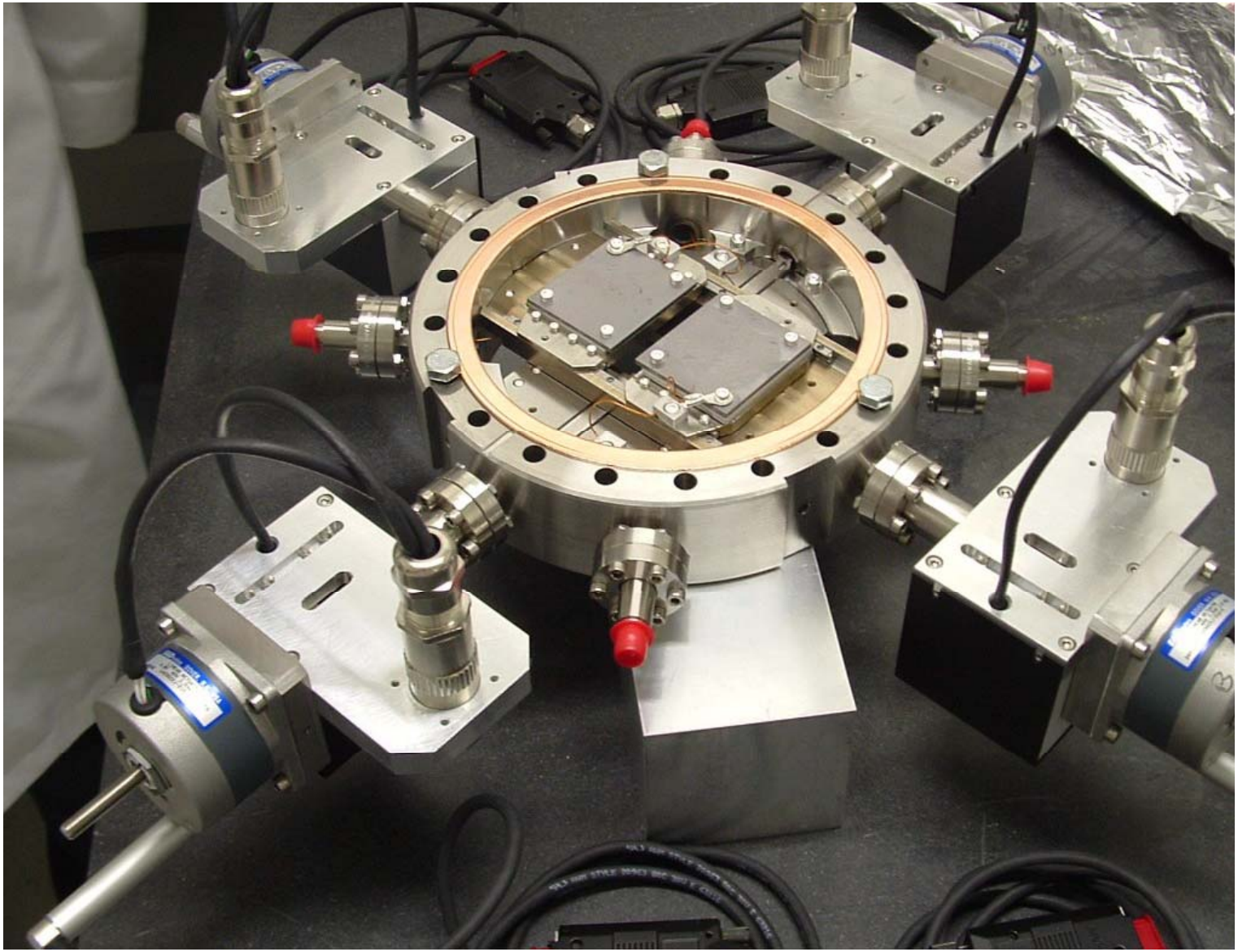

UHV Monochromatic Slits

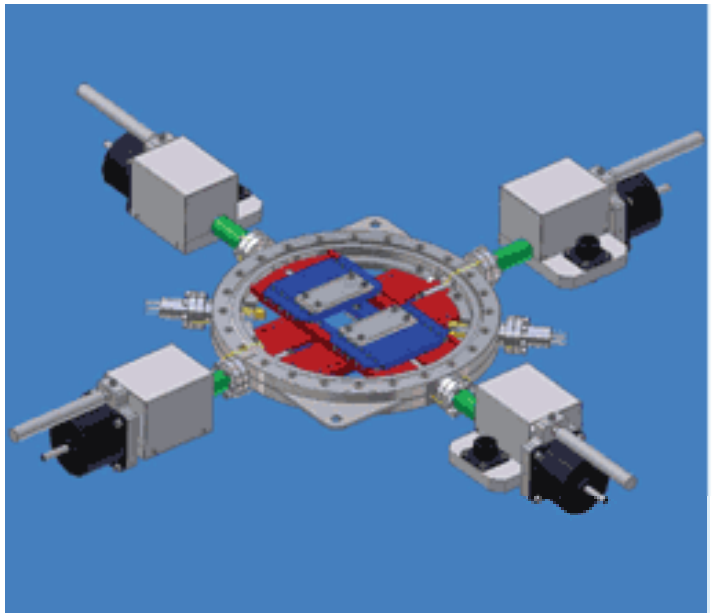

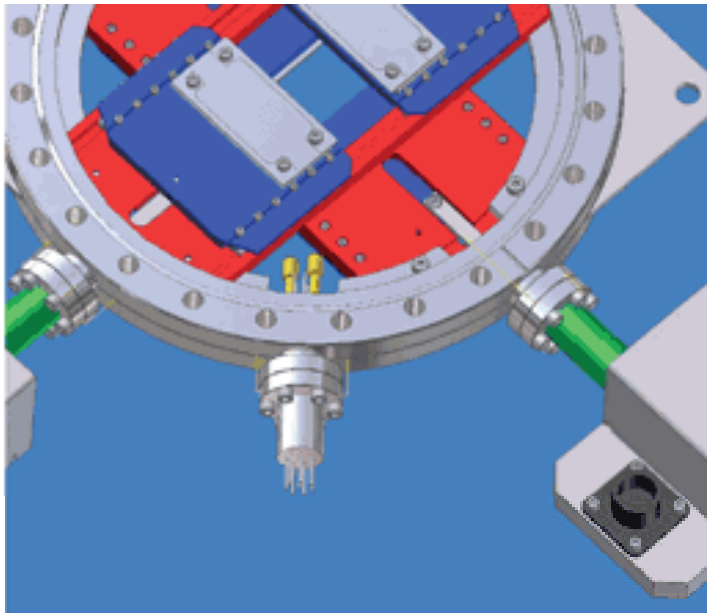

Part number	Slit Opening Max	A	B	C	D	E
	mm	mm		mm	mm	mm
SL-UHV-300-20-*	25	659	DN100	19.8	74.5	28.6
SL-UHV-300-30-*	50	710	DN150	22.1	74.5	28.6
SL-UHV-300-40-*	60	823	DN200	24.6	74.5	28.6

Water Cooled Exit Slits (0-500 µm Opening)

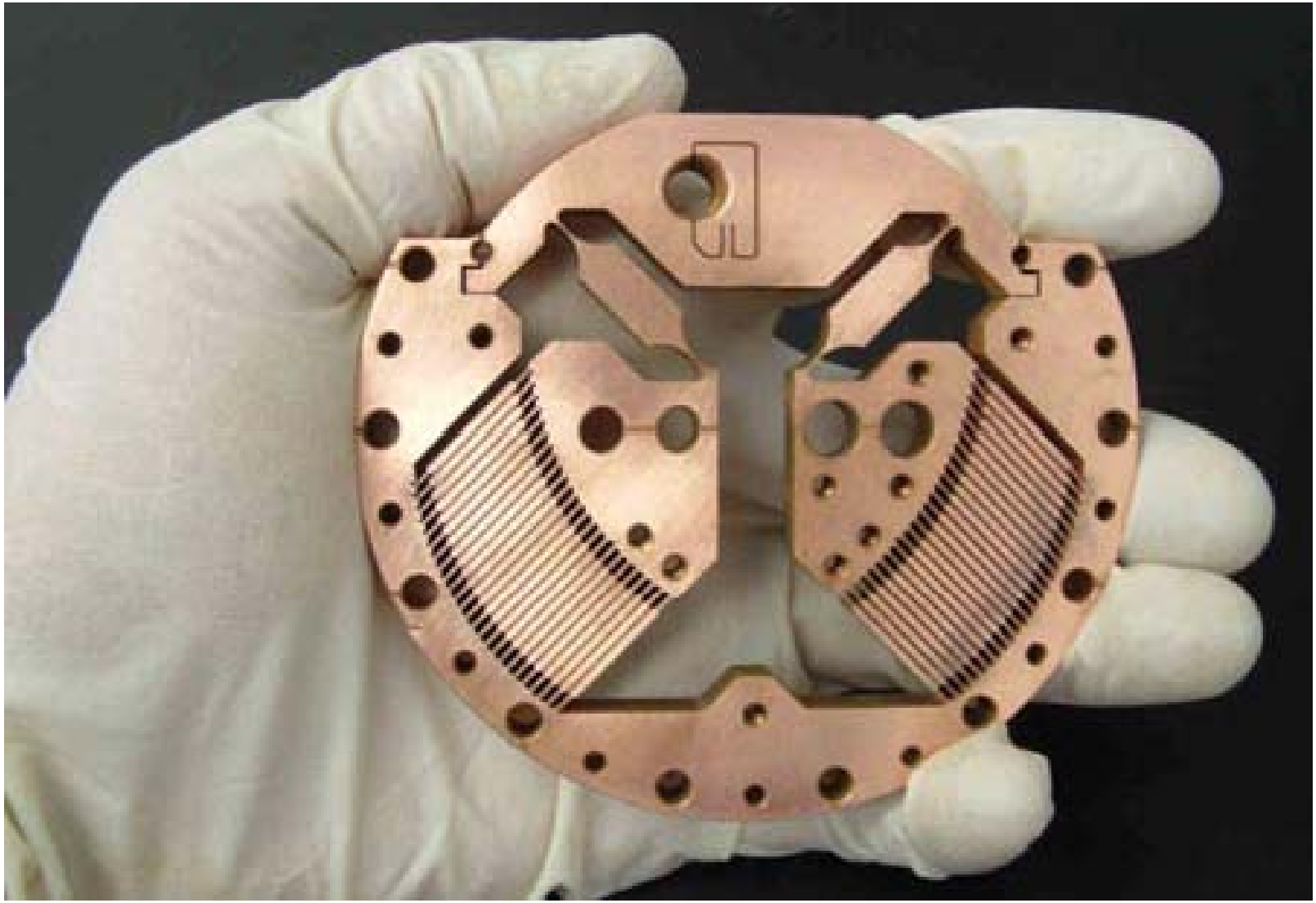

Water Cooled Exit Slits (0-500 µm Opening)

SL 800 EXIT SLITS		
	Parameter	**Value**
Horizontal Slit Blades	Range	0 to 500 µm
	Min. incremental movement	≤1 µm
	Repeatability	≤1 µm
	Backlash	≤1 µm
Vertical Slit Blades	Range	0 to 500 µm
	Min. incremental movement	≤1 µm
	Repeatability	≤1 µm
	Backlash	≤1 µm

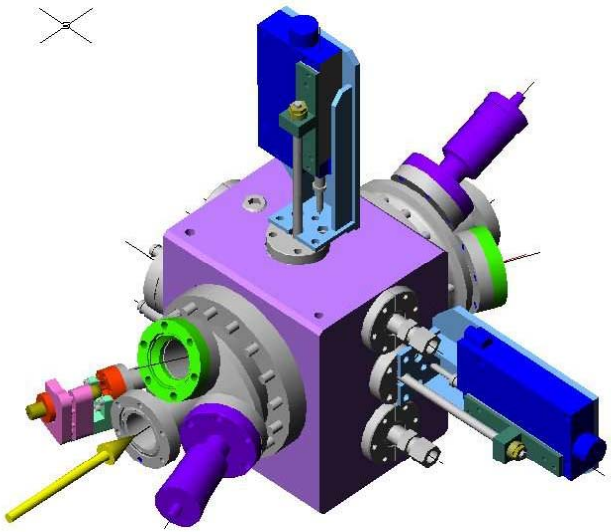

High Precision Monochromatic Slits

High Precision Monochromatic Slits

High Precision Monochromatic Slits		
	Parameter	Value
SL-100	Range	0 to 12.5 mm
	Min. incremental movement	≤ 2 µm
	Bi-directional repeatability	≤ 5 µm
	Accuracy	+/-5 um/25 mm
SL-200	Range	0 to 25 mm
	Min. incremental movement	≤ 2 µm
	Bi-directional repeatability	≤ 5 µm
	Accuracy	+/-5 um/25 mm
SL-300	Range	0 to 65 mm
	Min. incremental movement	≤ 2 µm
	Bi-directional repeatability	≤ 5 µm
	Accuracy	+/-5 um/25 mm

Ultra High Precision Monochromatic Slits

Ultra High Precision Monochromatic Slits		
	Parameter	Value
SL-100-1	Range	0 to 12.5 mm
	Min. incremental movement	≤ 0.5 µm
	Bi-directional repeatability	≤ 1 µm
	Accuracy	+/- 1 um/25 mm
SL-200-1	Range	0 to 25 mm
	Min. incremental movement	≤ 0.5 µm
	Repeatability	≤ 1 µm
	Accuracy	+/- 1 um/25 mm
SL-300-1	Range	0 to 60 mm
	Min. incremental movement	≤ 0.5 µm
	Repeatability	≤ 1 µm
	Accuracy	+/- 1 um/25 mm