Radiatively Cooled Intensity Chopper

Vinay Nagarkal, Curtis Mullin, Sven Achenbach, Venkat Subramanian, Garth Wells

Presented by: Vinay Nagarkal
Canadian Light Source, Saskatoon, Canada

MEDSI 2008
Saskatoon, June 10-13, 2008

Canadian Light Source

UNIVERSITY OF SASKATCHEWAN

Overview

- Description of SyLMAND (Synchrotron Laboratory for Micro and Nano Devices) beamline
- Functional requirements of the intensity chopper
- Mechanical design and radiative cooling
- Heat transfer calculations and FEA results
- Conclusions

SyLMAND Beamline

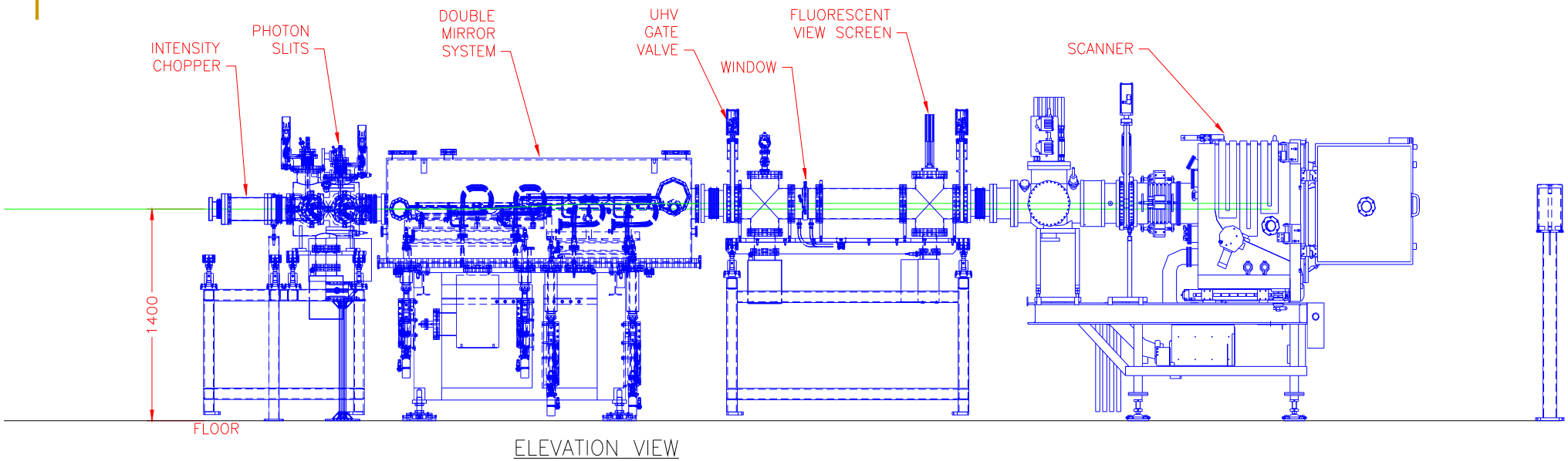

- Bend magnet beamline dedicated to research in high-aspect ratio microstructures in polymer films using X-ray lithography.
- High energy cut-off by the double mirror system and low energy cut-off by low atomic number filters. Pink beam or white light
- Scanner is the experimental endstation for homogeneous exposure of the sample in the vertical direction at the scanner.
- Beam size in the scanner: 160mm x 23mm.

Intensity Chopper

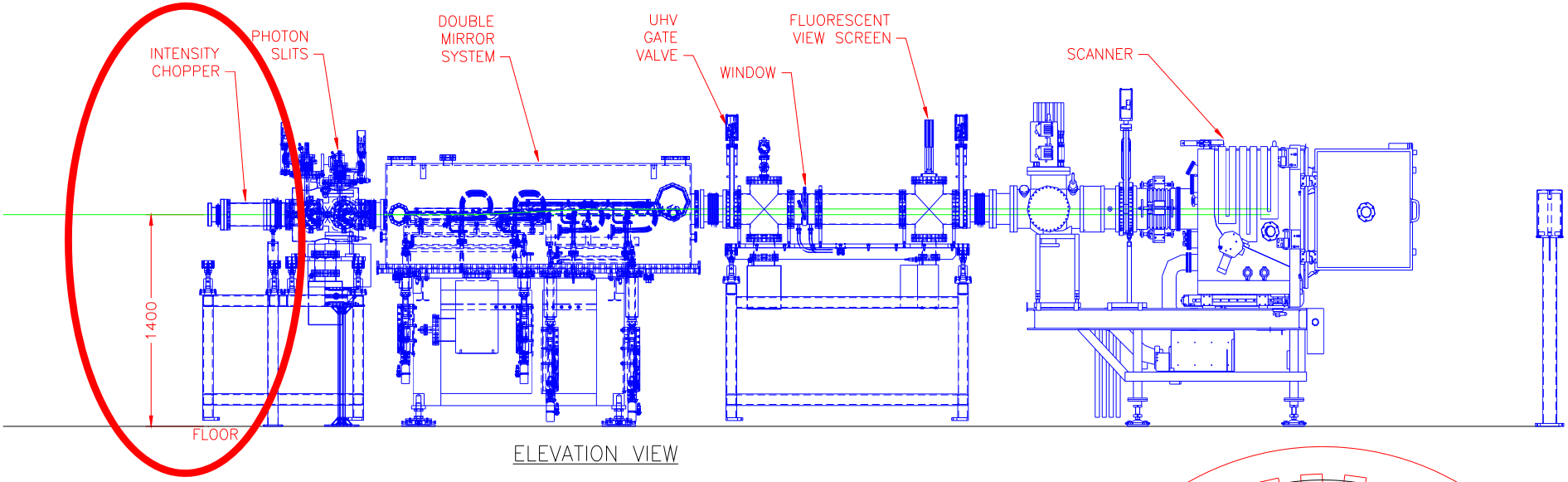

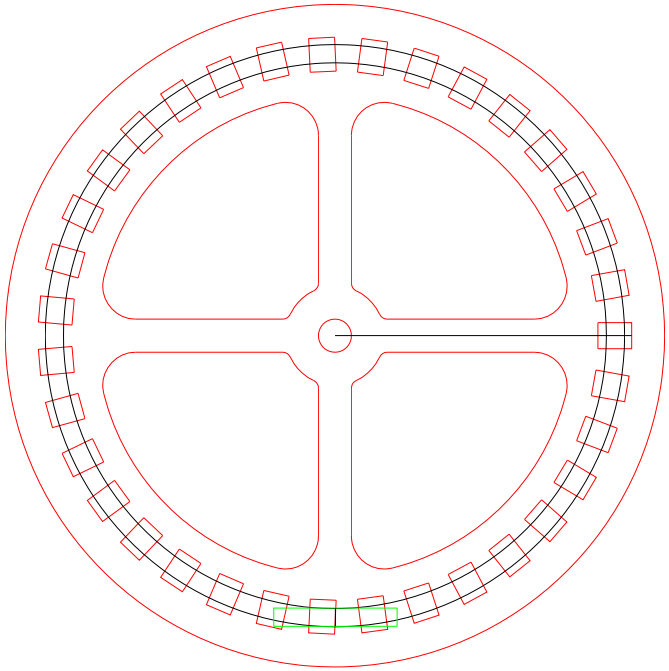

- First component of the beamline
- Beam power = 670 watts at 500mA
- Beam power more than 50 watts results in thermal distortion of the sample.
- Intensity chopper reduces the power impinging onto the sample independent of the spectrum.

Intensity Chopper Design requirements:

- Rotating component operating in UHV.
- Material must be completely opaque to the beam.
- Capable of moving out of the beam path.
- The material must fall within its temperature and stress limits (to be cooled if necessary.)

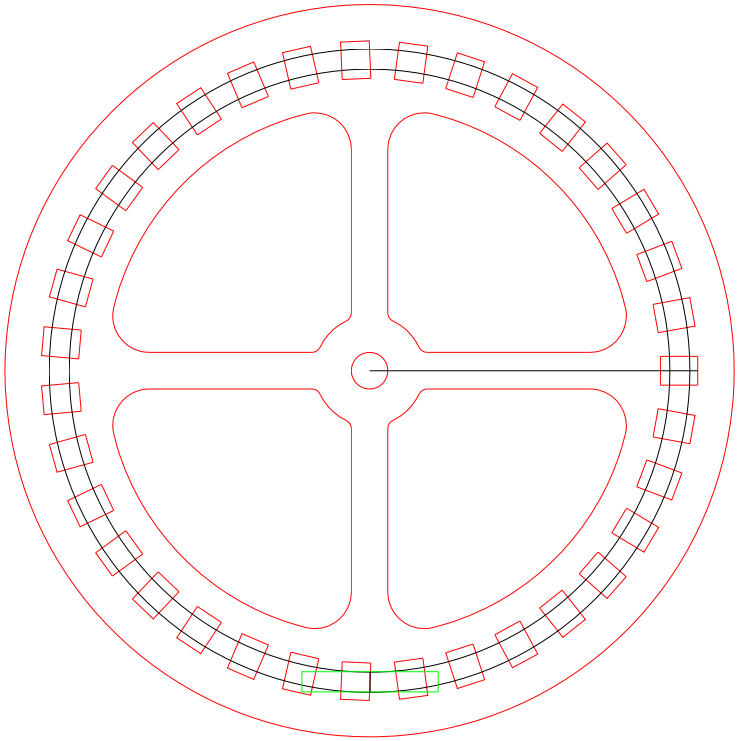

Chopper Design Concept

- Chopper intercepts the beam at normal incidence, cooling is very important.

- One of the first options was to use a hollow shaft water cooled **rotary feedthrough** (direct water cooling).

*

Rotary Feedthrough Limitations:

- High outgassing from the magnetic fluid
- Limited torque capability
- Limited rotational speed
- High cost (~ $100,000)

* Image taken from www.specs.com

Radiative Cooling

Based on Swiss Light Source rotary filter design

(G. Heidenreich, et al., Nucl. Instr. and Meth. A 577 (2007) p. 751.)

Relies on heat transfer by radiation

- Thermal radiation in the form of electromagnetic radiation
- Needs no medium for heat transfer

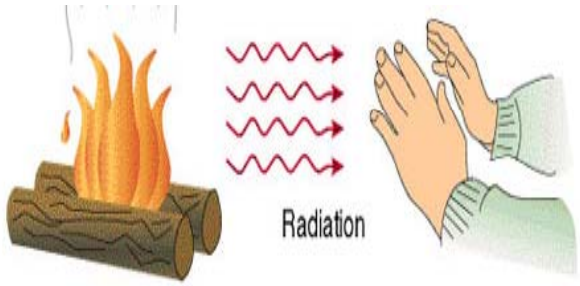

Design involves stationary water cooled enclosure around the chopper

- To intercept thermal radiation from the chopper, so that the heat is not radiated to the vacuum chamber

Intensity Chopper Design

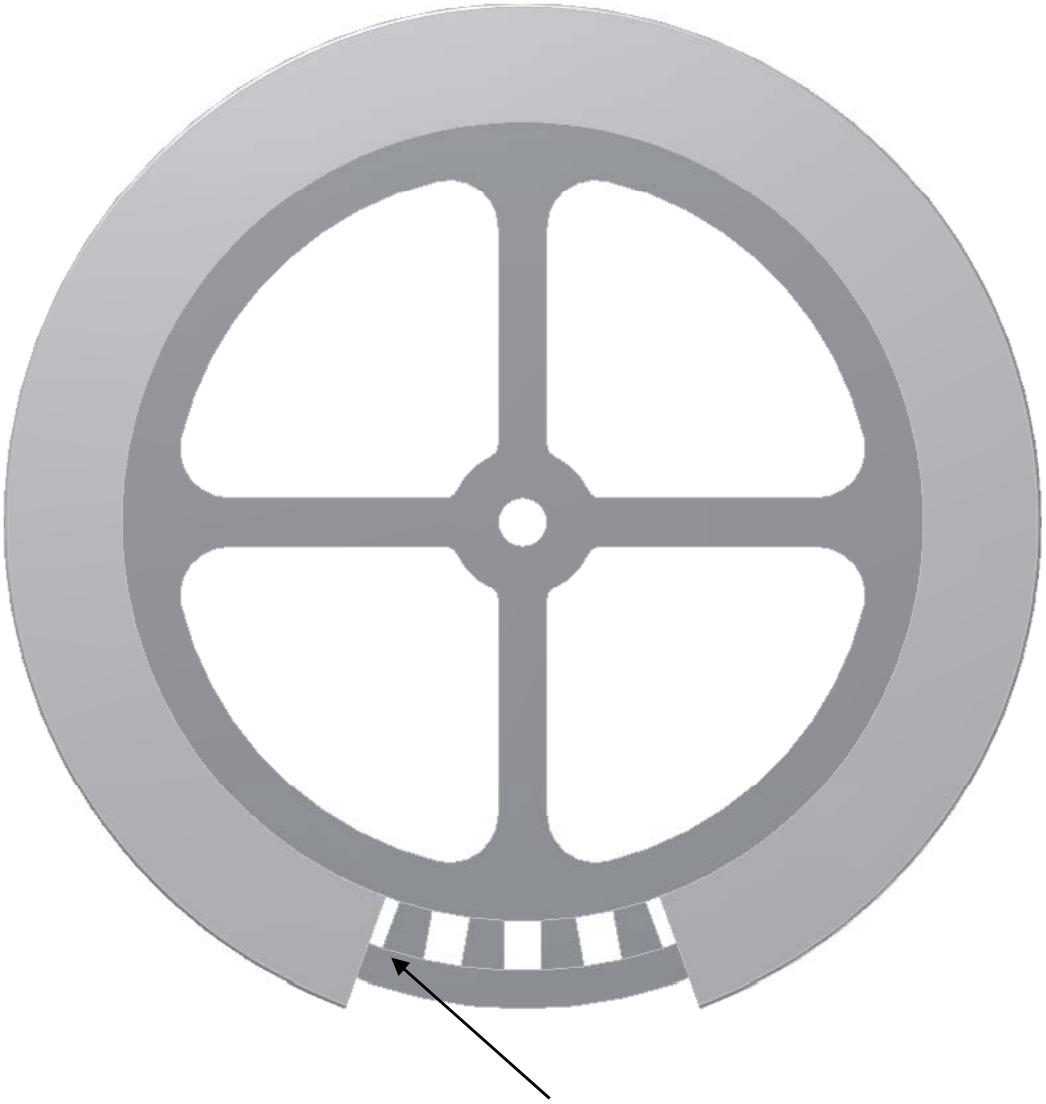

Chopper Disc (SS 304)

Cooling Enclosure (OFHC Copper)

Intensity Chopper Design

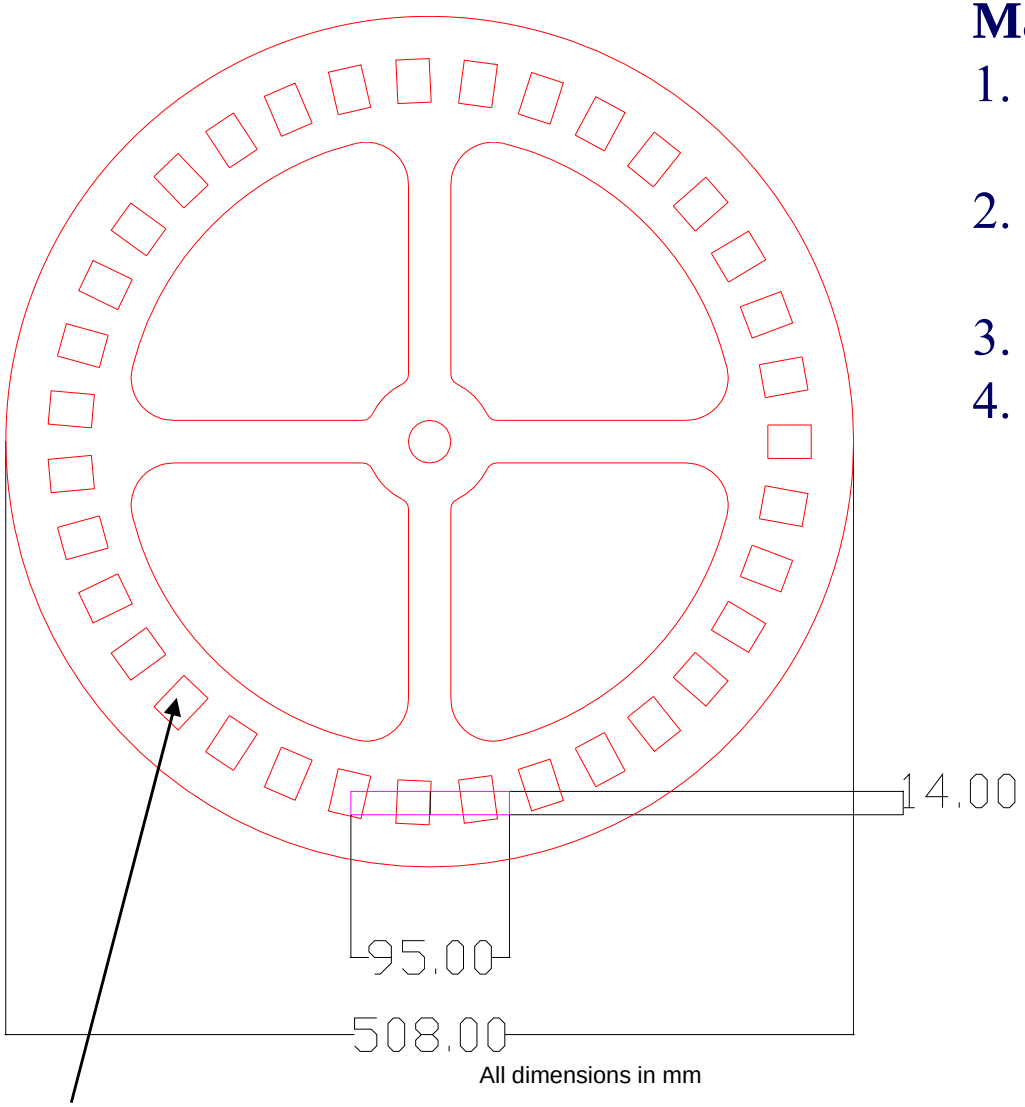

Slots for transmitting beam

Material Choices:

1. Sigradur G, glassy carbon (Max. thickness available is 6mm - cannot block the beam)
2. OFHC Copper/ Glidcop (High thermal conductivity)
3. Tungsten (high density)
4. Stainless Steel 304 (good machinability, lower thermal conductivity)

Chopper Physical Parameters:

1. Rotating disc 508mm [20 in.] diameter, 6.35mm [1/4 in.] thick
2. 35 windows, 20mm wide, 20mm apart
3. Rotational speed 400rpm.
4. Axis of rotation is parallel to the beam

Heat Transfer Calculations

- According to Stefan-Boltzmann law, the energy radiated by a blackbody radiator per second per unit area is proportional to the fourth power of the absolute temperature and is given by:

$$Q = \sigma \varepsilon A T^4$$

Where,

$$Q = \text{Power radiated} = \text{Beam Power (670 W)}$$

$$\sigma = \text{Stefan Boltzmann constant} = 5.67 \times 10^{-8}\ \text{W/m}^2\text{K}^4$$

$$\varepsilon = \text{Emissivity of Stainless Steel 304} = 0.57$$

$$A = \text{Total Surface Area of the chopper} = 0.12\ \text{m}^2$$

$$T = \text{Absolute temperature (K)}$$

Temperature of the chopper disc = 371 ^{o}C.

Maximum operating temperature of SS 304 is about 816 ^{o}C.

Finite Element Analysis (ANSYS)

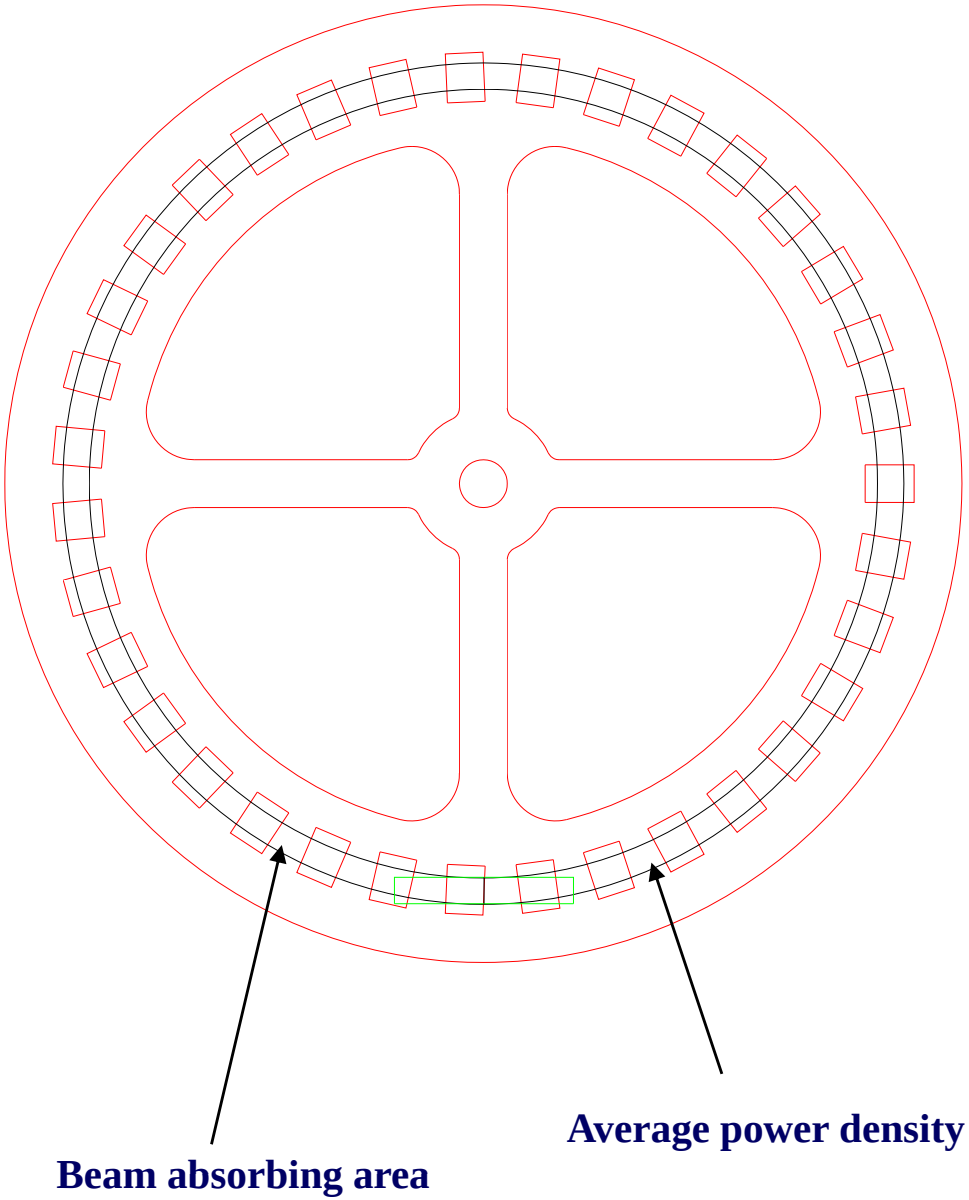

Description of Analysis:

Thermal:

•Since the chopper is rotating, apply uniform power density

• Average power density

- Apply as heat flux (71 kw/m^2)
- Ambient temperature of 26 ^{o}C

• Nonlinear iterative solution

Structural:

• Obtained temperature profile and centrifugal force (42 rad/sec)

FEA Results (Thermal)

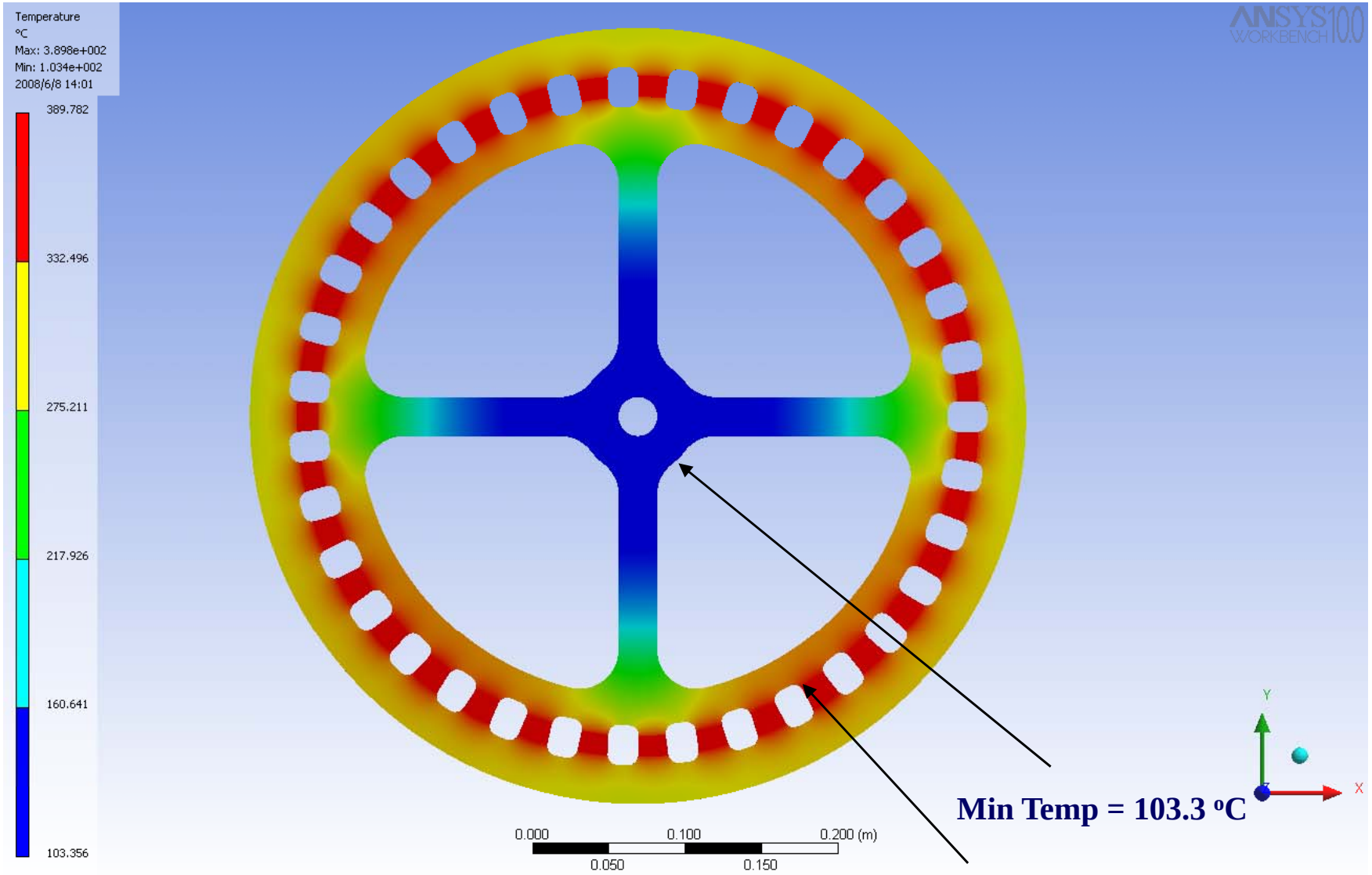

Min Temp = 103.3 °C

Max. Temp = 389.7 °C

FEA Results (Total Deformation)

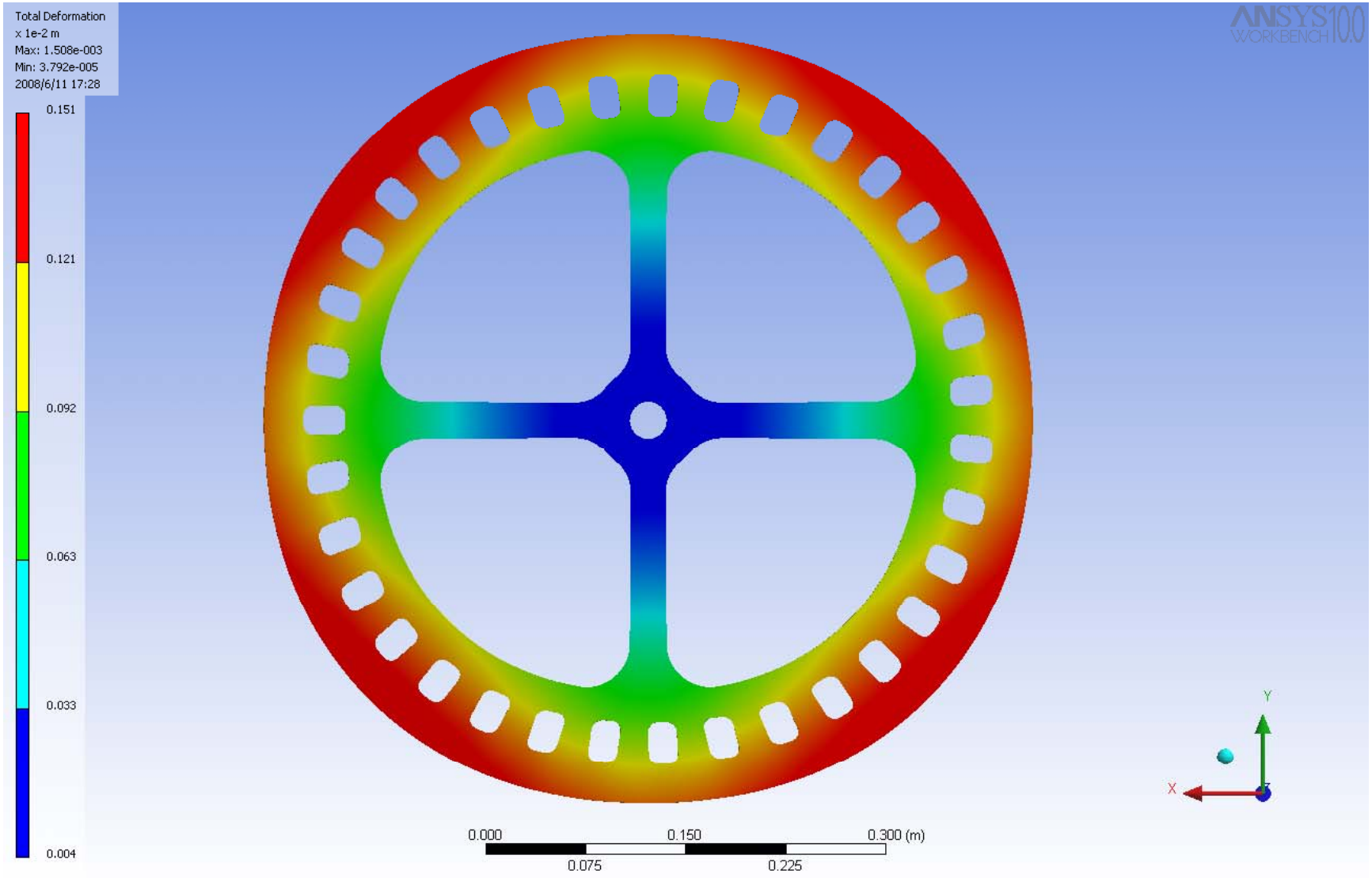

Maximum deformation = 1.5 mm

FEA Results (von Mises Stress)

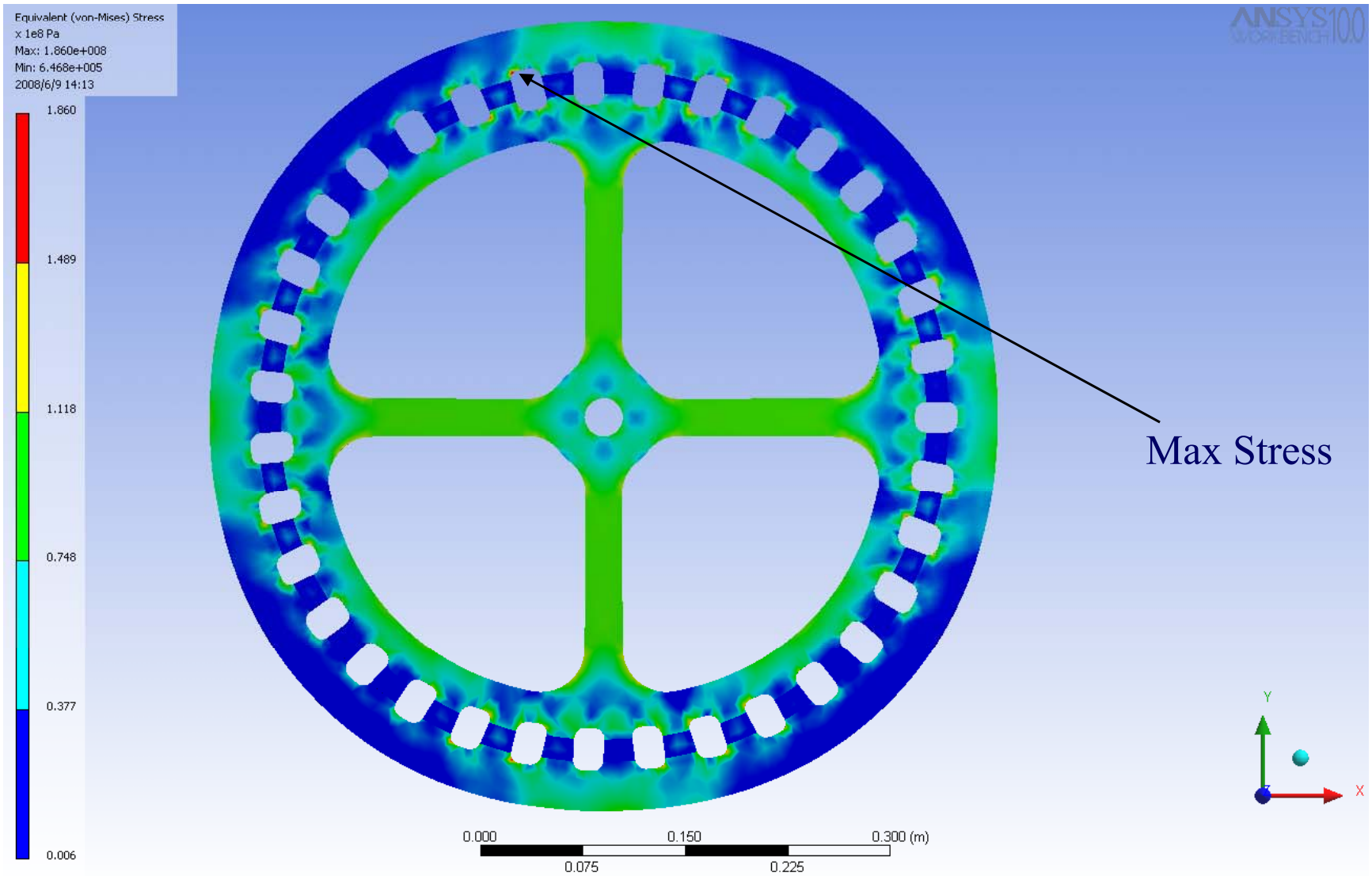

Maximum von Mises stress: 186 Mpa ; Yield Strength for SS 304: 215 Mpa

Max. Temperature Vs Emissivity

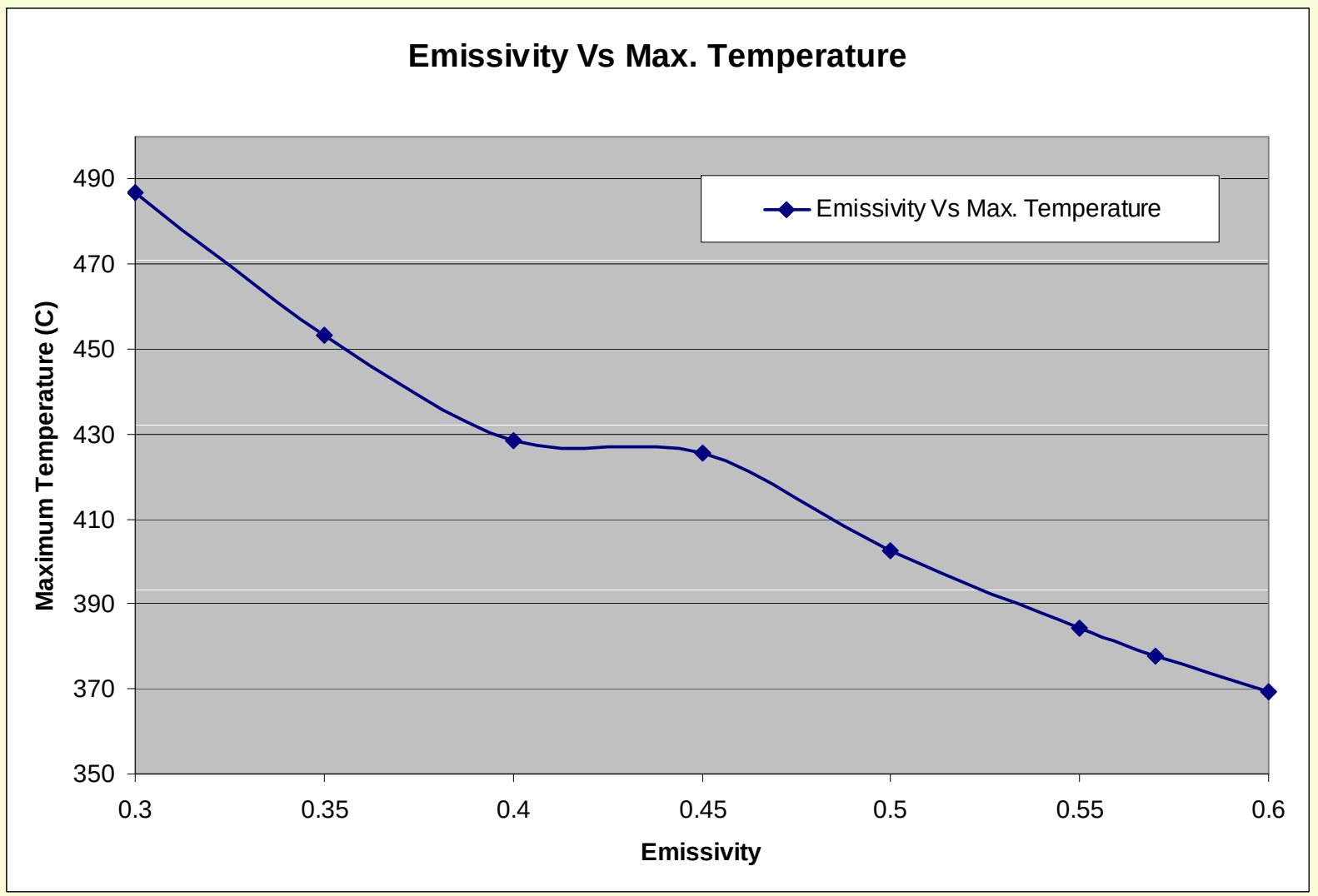

Conclusions

- The concept of radiative cooling has been investigated.
- Both analytical solution and FEA proves feasibility of the design.
- Maximum temperature was determined to be 389.7 ^{o}C (max. allowable 816 ^{o}C) and the maximum von Mises stress to be 186 Mpa (max. allowable 215 Mpa).

Thank you