Alignment of Magnet-Girder Assemblies at NSLS-II

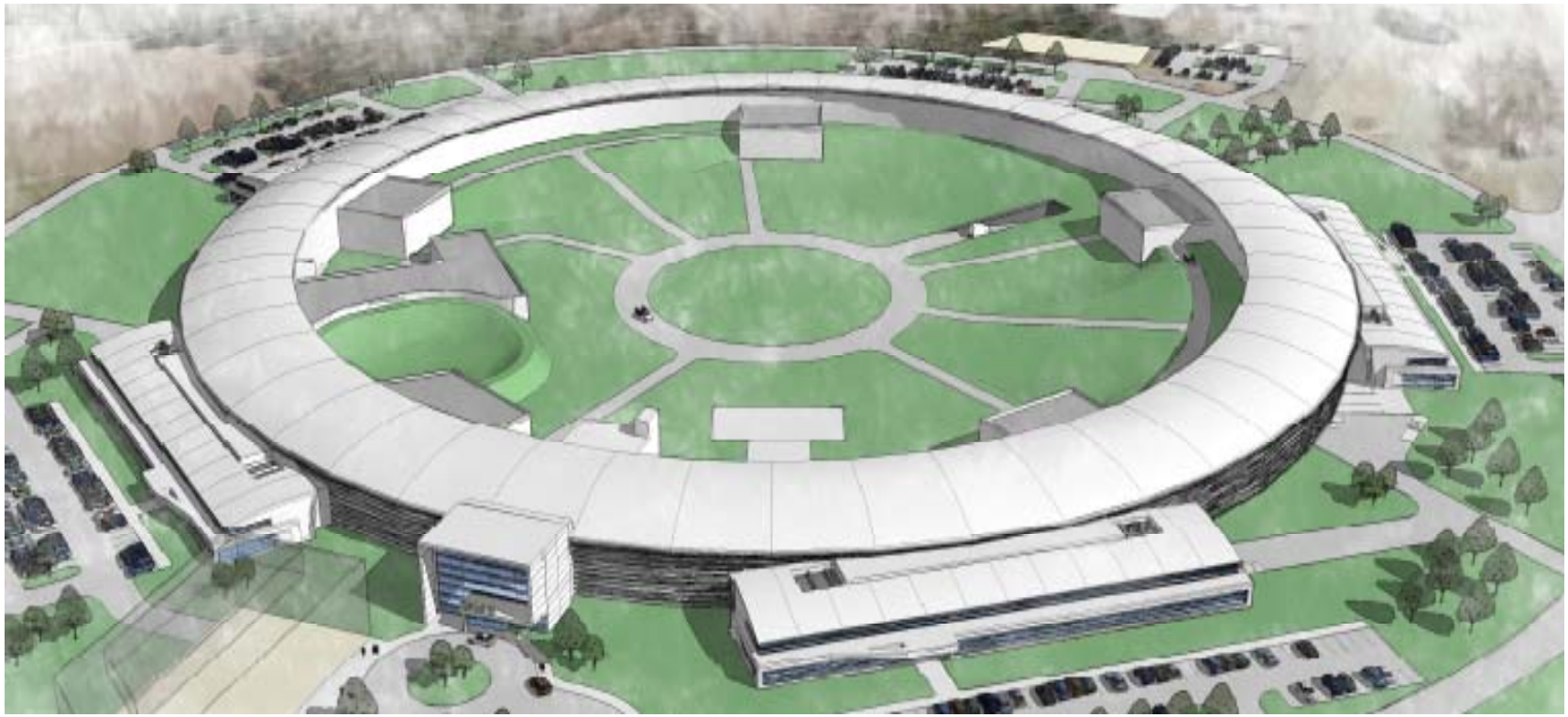

L. Doom for the NSLS-II Mechanical Engineering Group

Acknowledgments

Girder and magnet design and alignment

M. Anerella, L. Doom, G. Ganetis, P. He, A. Jain, P. Joshi, P. Kovach, F. Lincoln, S. Ozaki, S. Plate, V. Ravindranath, S. Sharma, J. Skaritka, F. Willeke

Brookhaven National Laboratory, Upton, NY, USA

Alexander Temnykh

Cornell University, Ithaca, NY

L. Rivkin, D. George

Swiss Light Source

Outline

- Specifications for magnet and girder alignment
- Design concepts and requirements
- Tests and analysis performed with conclusions (girder deflection, recovery, adjustment resolution, tightening)
- General description of vibrating wire alignment technique
- Girder positioning fixtures and measurement
- Girder support tightening
- Procedure for maintaining girder profile
- Overall alignment procedure
- Conclusions

NSLS-II Facility Overview

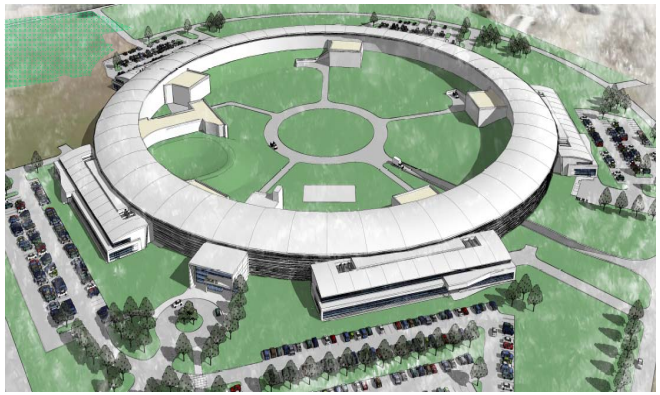

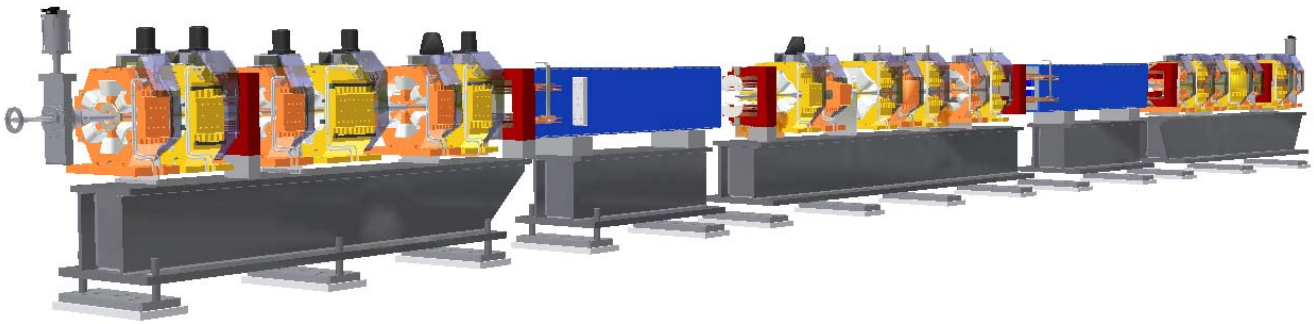

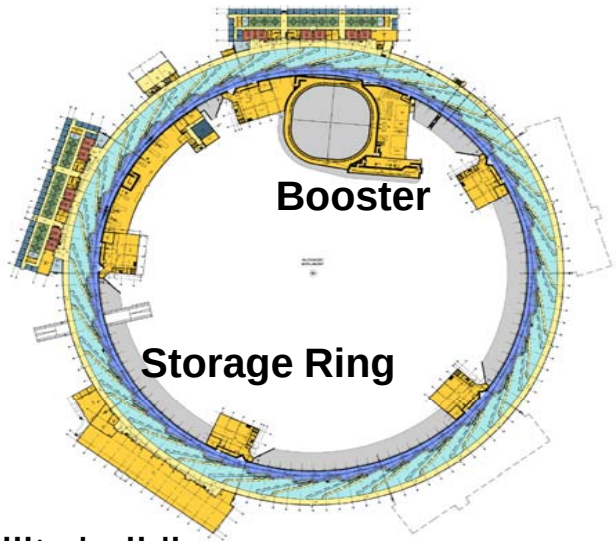

- Energy: 3 GeV
- Circumference: 792 m
- Lattice: 30 DBA Cells (15 Super periods)
- Low Emittance: 2 nm-rad. without damping wigglers
  0.6 nm-rad. With damping wigglers

5 Utility buildings

5 Lab Office buildings

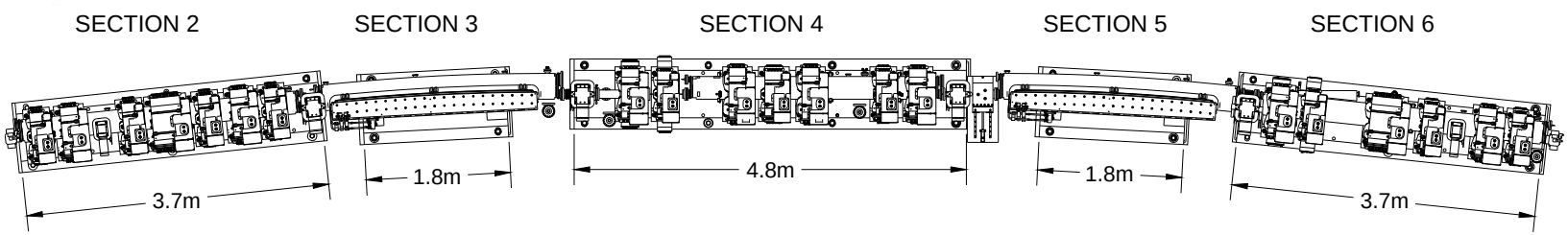

One of 30 typical cells

Office of Science
U.S. DEPARTMENT OF ENERGY
BROOKHAVEN NATIONAL LABORATORY
BROOKHAVEN SCIENCE ASSOCIATES

Specifications

- NSLS-II Alignment Tolerances

Relative tolerances	Magnet to Magnet (RMS)	Girder to Girder (RMS)
Horizontal alignment	± 0.030 mm	± 0.100 mm
Vertical alignment	± 0.030 mm	± 0.100 mm
Roll angle	± 0.20 mrad	± 0.500 mrad

Any variation in girder profile falls within the magnet to magnet tolerance budget.

Design concepts and requirements

- Design a support system that allows positioning of magnets and girders without expensive and critical machining while maintaining a high natural frequency (>30 Hz.)
- Position and tighten magnets within ±.030 mm of target.
- Quickly position girders in storage ring to within ±.100 mm
- Tighten girder supports without loosing position accuracy.
- Define the profile of the top of the girder when magnets are positioned and reproduce the girder profile in the storage ring.
- Control all positioning with removable alignment fixtures.

Section 4 Storage Ring Girder, Vacuum Chamber, Magnets

Assembly Weight: 8000 Kg

Overall Length: 4.8 m

Overall Width: .86 m

Overall Height: 1.6 m

Beam height is 1.2 m

- The Girder design was developed incorporating stability and alignment requirements
- All components are rigidly connected using threaded rods (floor plate to girder, girder to magnets)
- The designed is cost effective using conventional fabrication (girder machining tolerances are ±.5 mm)
- 8 point support system to increase natural frequency
- All components are independently adjustable using removable alignment fixtures

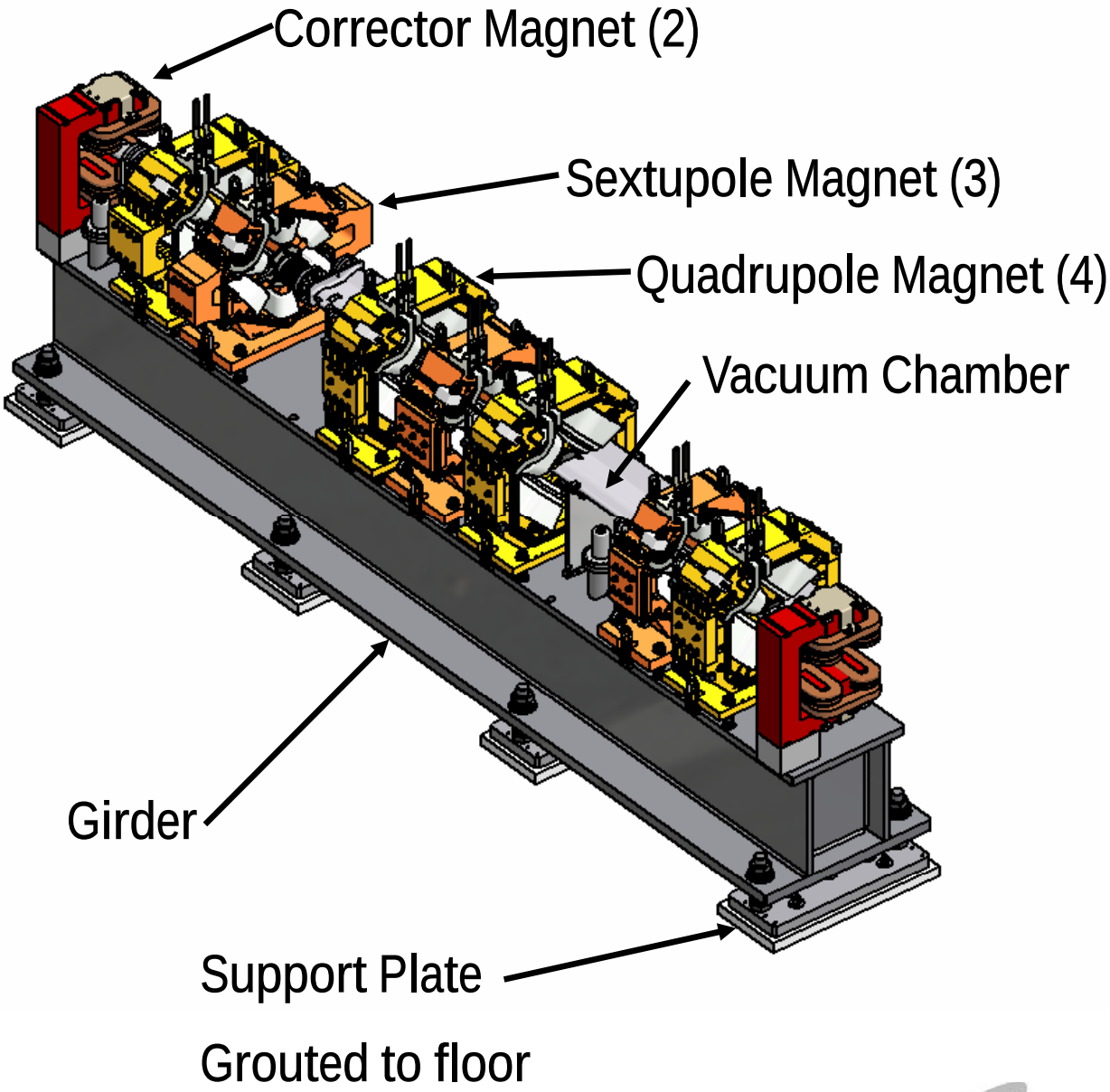

Vibrating Wire R&D Setup at BNL

- Based on the accuracy required for locating the magnetic centers, the vibrating wire technique developed at Cornell University will be used.
- In this technique, an AC current is passed through a wire stretched axially in the magnet.
- Any transverse field at the wire location exerts a periodic force on the wire causing vibrations.
- The vibration amplitudes are compared to the wire position to determine magnetic axis.

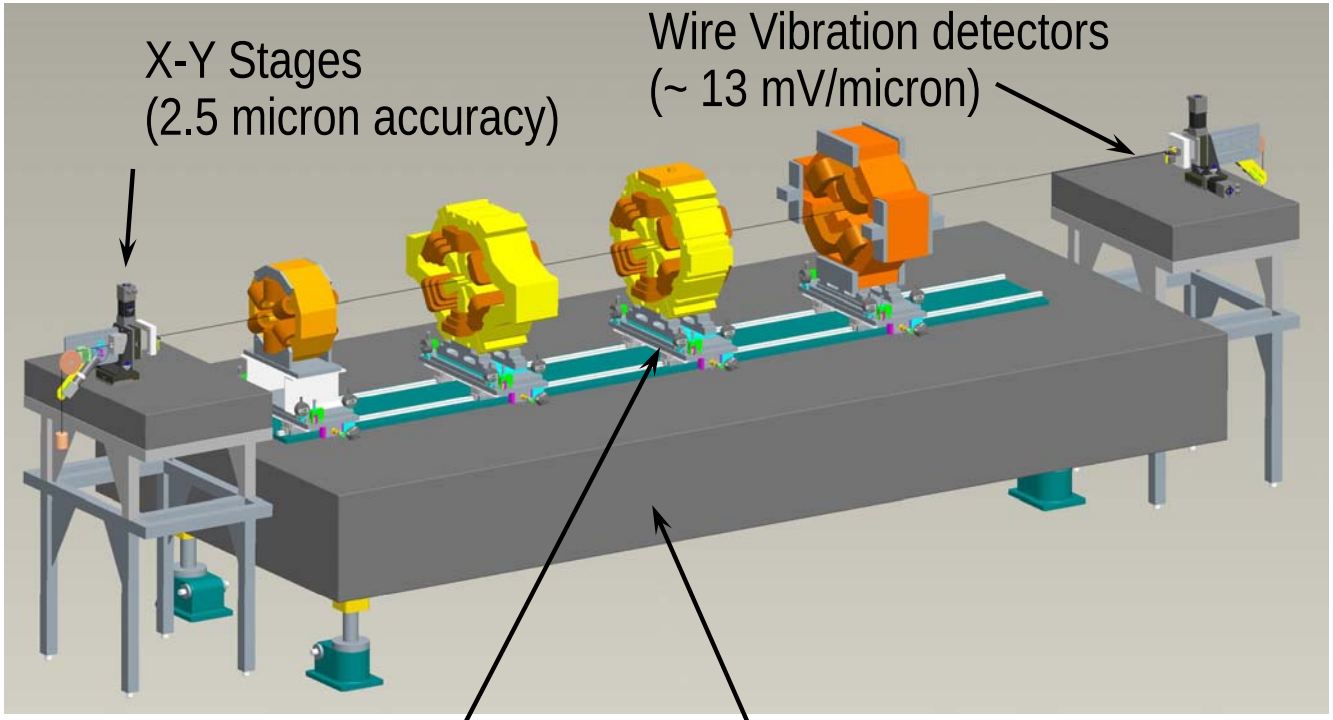

Magnet position adjusters
(1 micron accuracy)

Granite table for supporting magnets during R&D phase (currently being replaced with an actual girder)

Quadrupole Measurements: Horizontal Scans

- Experimental data shows that the magnetic center of Quadrupole magnets can be located within .004 mm
- Graph describes wire position vs. wire displacement for various currents

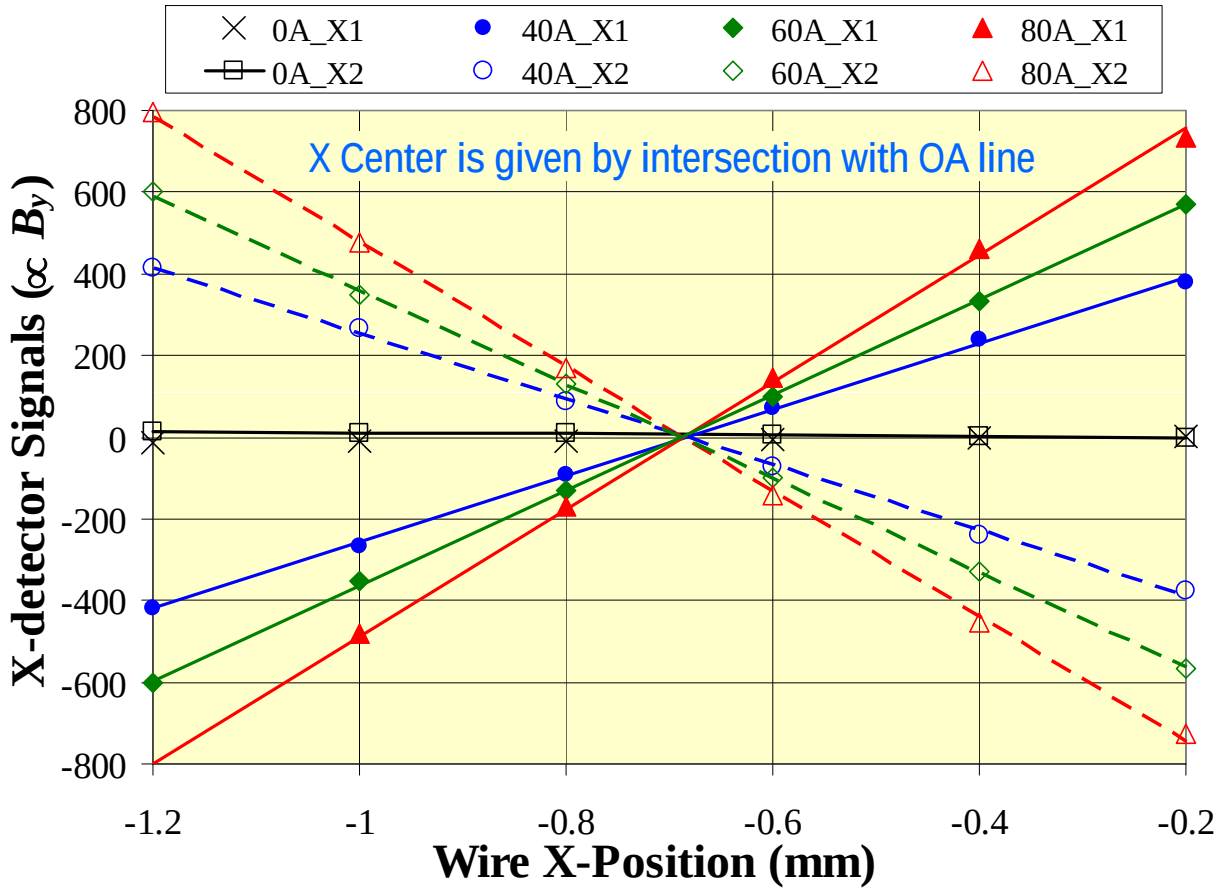

Current	X1_Center	X2_Center
40 A	-0.691	-0.690
60 A	-0.694	-0.693
80 A	-0.690	-0.691

Sextupole Measurements: Horizontal Scan

- Experimental data shows that the magnetic center of Sextupole magnets can be located within .006 mm

- Graph describes wire position vs. wire displacement for various currents

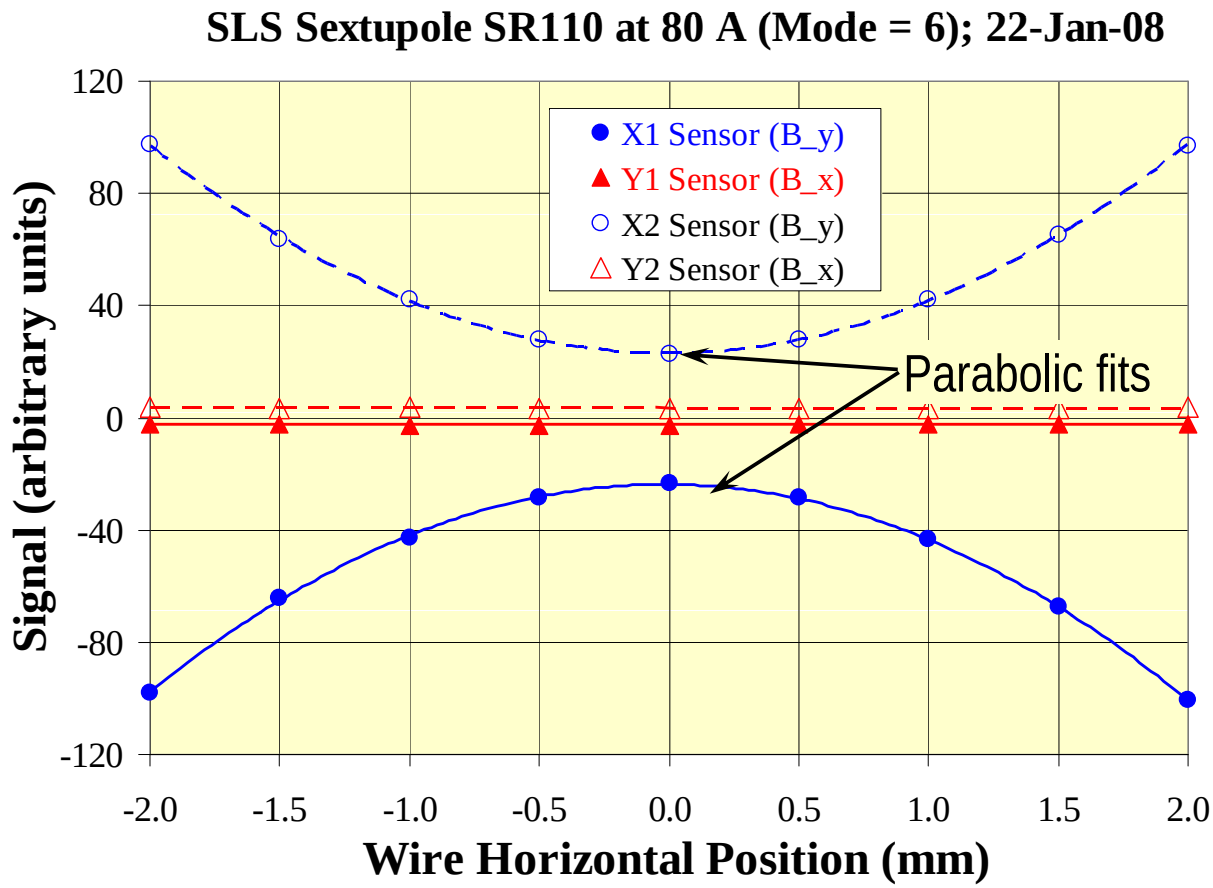

Horizontal center is defined as the point of zero slope in B_y Vs. X

Magnet Movers for Alignment on a Girder

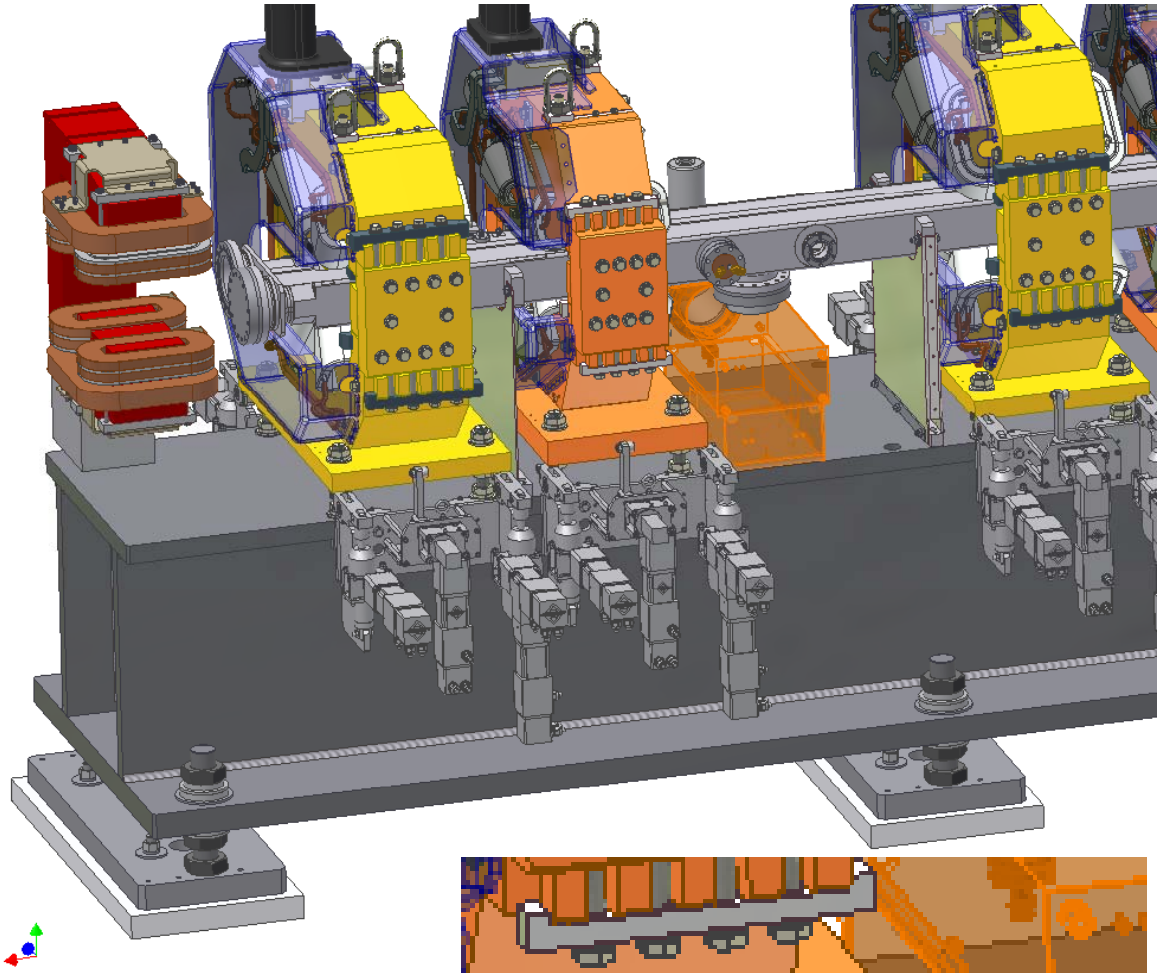

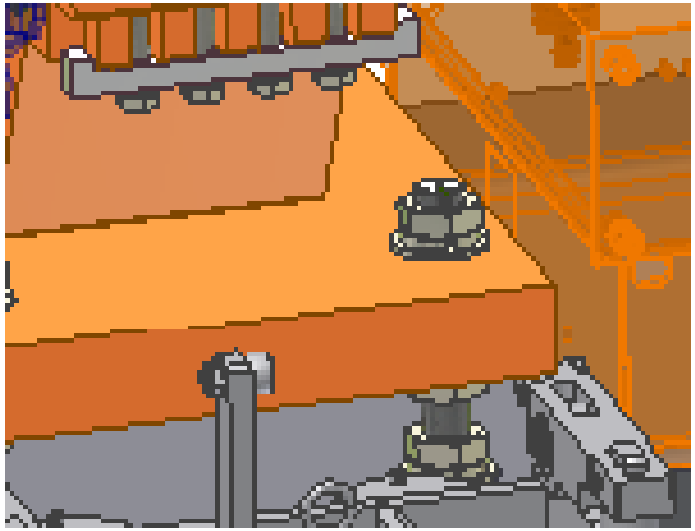

- Magnet positioning fixtures will be installed on the girder
- The vibrating wire system will determine the magnetic center of each magnet
- The magnets will automatically move to there required positions
- The magnets will be manually locked in place
- The magnet positioning fixtures will be removed
- Tests have been performed that demonstrated the ability to lock magnets in place within 5 microns.

Girder positioning fixture

- Removable girder positioning fixtures mount under each end of the girder.
- 90% to 95% of girder weight is supported by flexible air jacks to minimize loads on adjustment assembly
- Technicians manually adjust the position in horizontal directions using hand wheels and vertically using open end wrenches
- All girder positioning is accomplished with a laser tracker as position reference at accuracies within .050 mm.

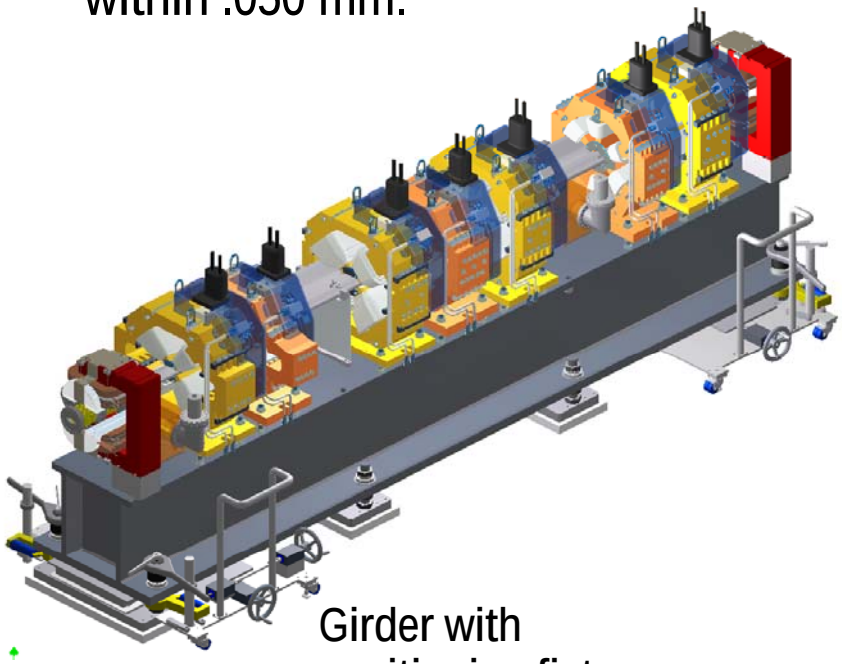

Girder with positioning fixtures installed

Laser tracker

X-Y positioning fixture

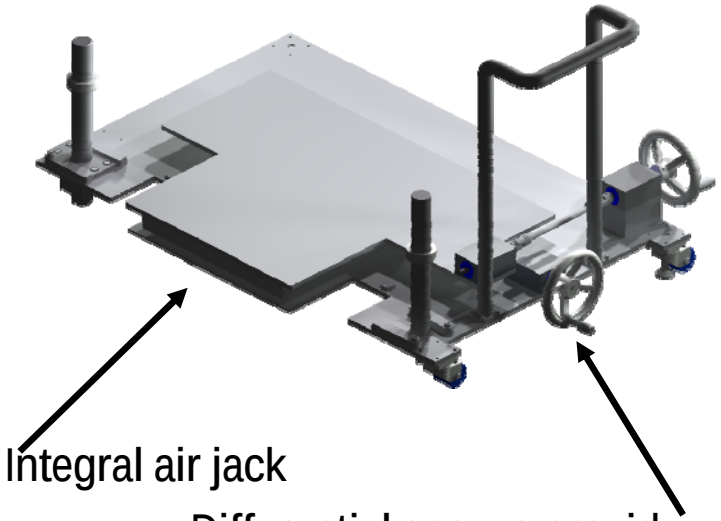

Integral air jack

Differential screws provide .002mm per degree of hand wheel rotation

Tightening torque and movement

- Testing confirmed that a torque of about 1000 lb-ft (138 Kg-m) is required to maximize resonant frequency. Increasing the torque further adds little.
- Tightening to 1000 lb-ft caused less than .045mm horizontal movement of the girder. Incremental tightening of nuts should reduce movement.
- A 100 lb-ft torque wrench with 13:1 torque multiplier on the upper nut will be tightened against a split head hydraulic wrench on the lower nut
- Vertical positioning within .011 mm at 1000 lb-ft was easily accomplished

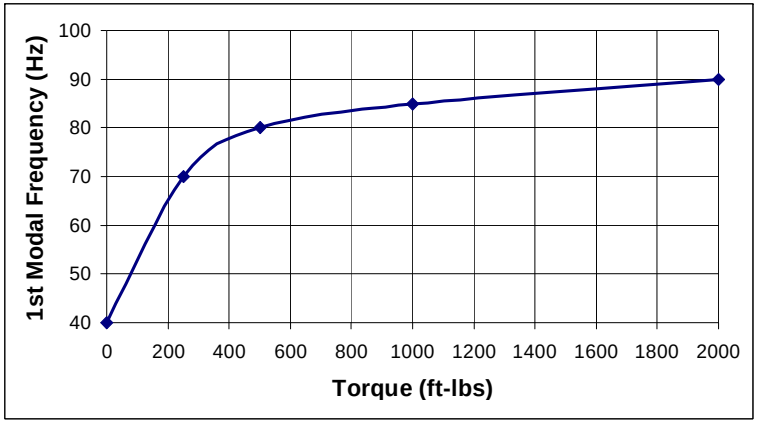

Torque wrench with 13:1 torque multiplier

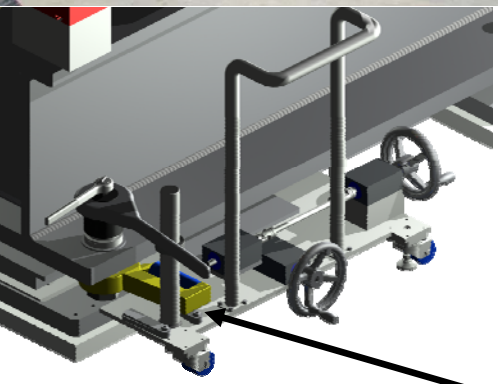

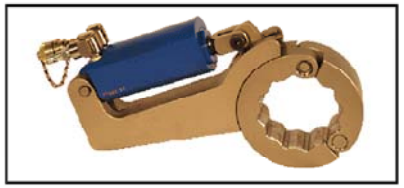

Hydraulic torque wrench with split head design

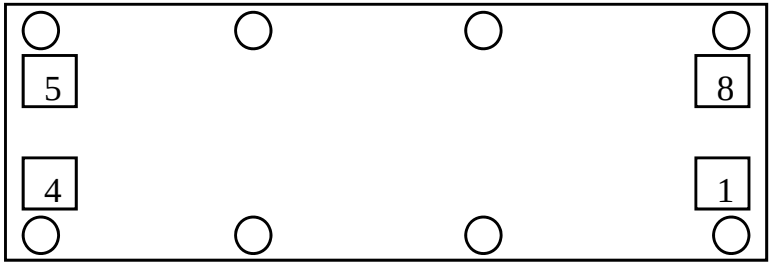

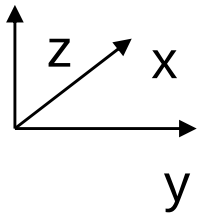

Sensor Locations	Direction	100 ft-lbs (microns)	1000 ft-lb (microns)
1	X	6	43
	Y	4	-13
	Z	-1	3
5	X	2	-19
	Y	-6	-24
	Z	1	2
4	Z	4	-9
8	Z	0	11

Office of Science
U.S. DEPARTMENT OF ENERGY

BROOKHAVEN NATIONAL LABORATORY
BROOKHAVEN SCIENCE ASSOCIATES

Recovery of girder profile

Laser Tracker and Dial Indicator readings

microns	Initial	Raised	Relaxed	Raised	Relaxed	Raised	Relaxed
Left indicator	4	55	7	55	8	55	8
Right indicator	3	51	6	50	5	50	10
Upper fiducial	-1	38	1	42	1	45	4
Lower fiducial	0	51	8	55	4	54	13

- FEA shows .140 mm girder deflection due to gravity without center supports.
- Tests showed that a deflection of .055mm caused a change in girder surface profile in excess of .013mm. Recover is not 100%.
- Even if the girder's top surface was machined perfectly flat it would require final alignment in order to maintain the magnet position tolerance of ±.030mm.
- Laser tracker measurements showed a good relationship with dial indicators.

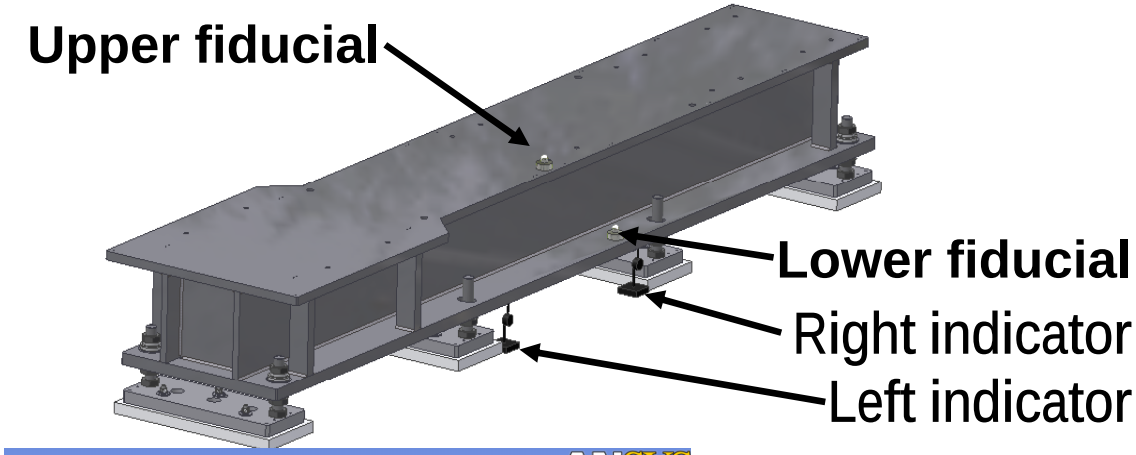

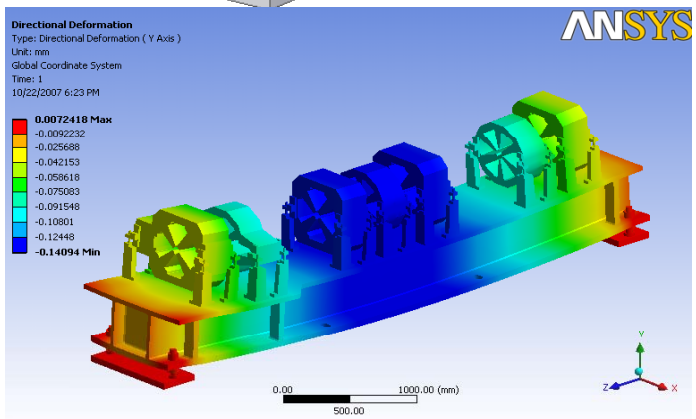

Office of Science
U.S. DEPARTMENT OF ENERGY
BROOKHAVEN NATIONAL LABORATORY
BROOKHAVEN SCIENCE ASSOCIATES

Girder surface profile

- Girder profile must be reproducible between the magnet alignment room and the storage ring.
- Following magnet alignment a girder profile baseline will be defined using high precision inclinometers between fiducial mounts above each floor support.
- The repeatability of these inclinometers is .2 arc seconds or .001 mm at 1500 mm. providing more than adequate vertical resolution.

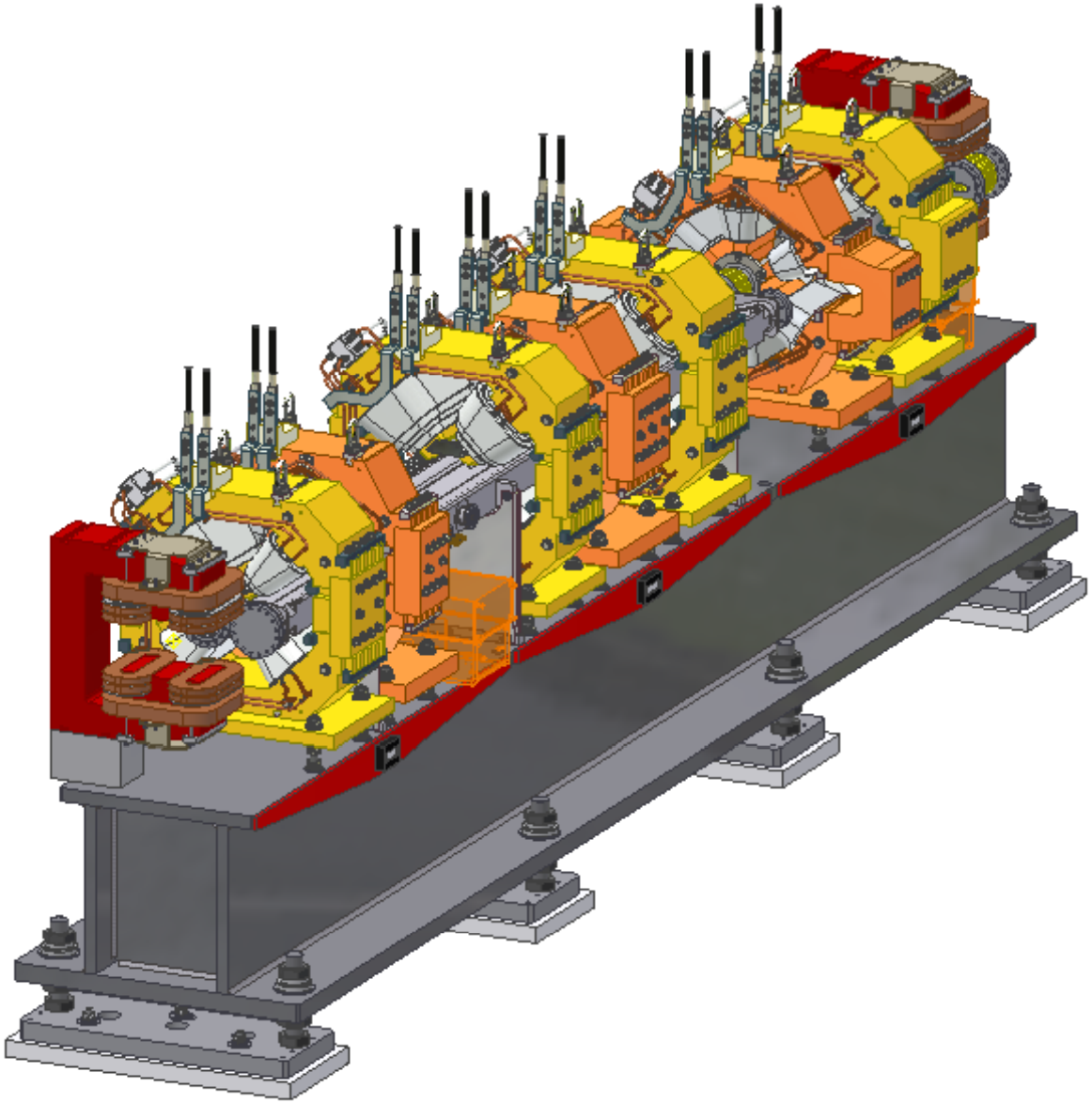

Overview of alignment procedure

- Install magnets on a girder, install vacuum chamber, and carry out a initial alignment
- Install girder assembly in environmentally controlled room in the same manner as girder will be installed in the storage ring tunnel.
- Set up vibrating wire alignment system and wait for temperature to stabilize.
- Determine center of each magnet relative to the wire coordinates and move the magnets to their final locations on the girder.
- Lock the magnets in place, while monitoring the magnet positions using displacement sensors.
- Define baseline for girders constrained profile.
- Move girder assembly to storage ring.
- Position ends of girder using removable girder positioning fixtures and laser trackers.
- Reestablish constrained profile of girder and confirm end positions.
- Lock girder in final position.

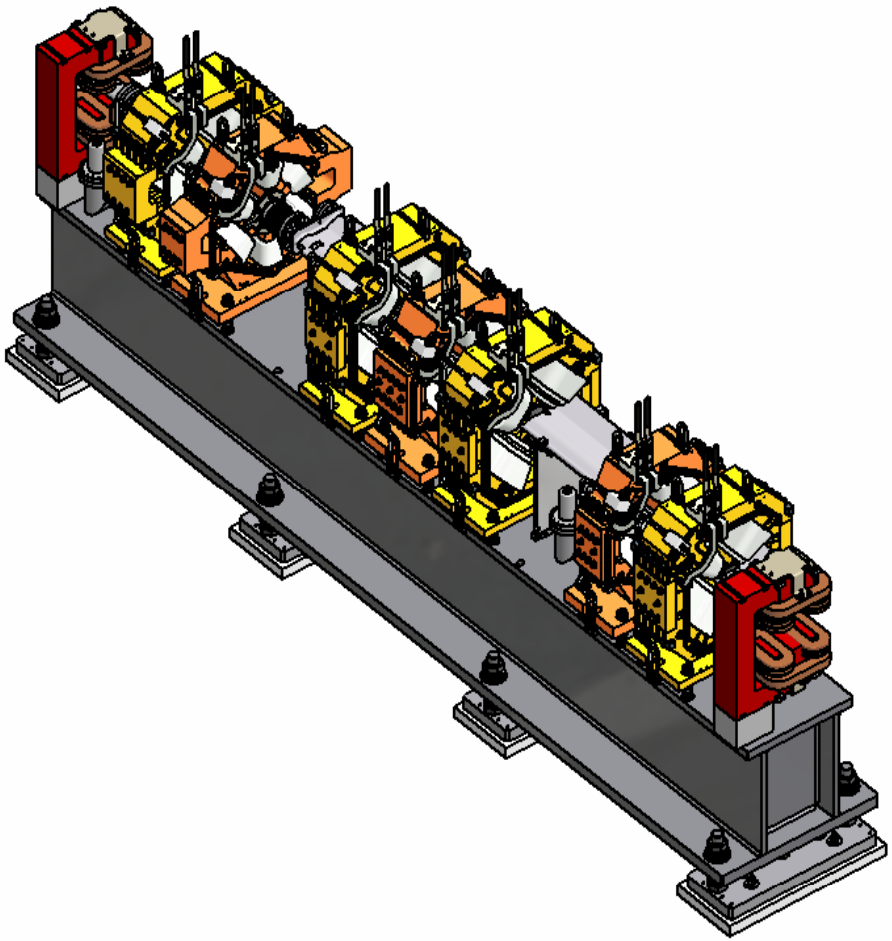

Conclusions

- The vibrating wire technique can accurately locate the magnetic centers within specification. Adjustable magnet supports will allow adequate positioning, a rigid structure and reduced cost of magnets and girders.
- Laser trackers can be used to locate the girder assemblies in conjunction with girder positioning fixtures and will meet accuracy and scheduling requirements.
- Positioning of the magnet and girder assemblies can be accomplished within the allowable tolerances using removable fixtures.
- Tightening the girder supports causes some movement but it is within the allowable tolerance even when tightened to 1000 lb-ft. Sequential tightening of the supports will improve these results.
- During research and development we discovered that the girder profile does not recover completely when deformed. Magnet alignment requirements require that the girder profile must be duplicated in the storage ring to match it's condition after magnet positioning. The girder profile can be duplicated using precision inclinometers to establish a baseline after magnet alignment and again when completing girder alignment.

- Thank you for your attention