Nested K-B Mirrors for Improved Numerical Aperture Better Slope-Error Tolerance

Gene E. Ice

Oak Ridge National Laboratory, Oak Ridge TN USA

J.-Y. Choi

Pohang Accelerator Laboratory, Pohang, Korea

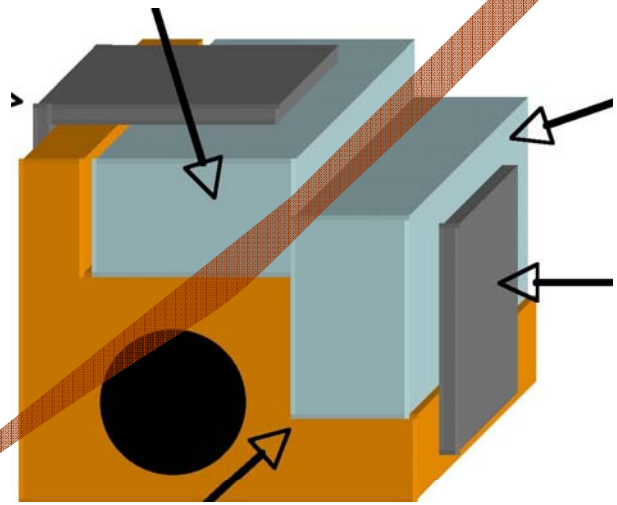

Goal 40 nm near-term/ 15 nm long-term

Polychromatic 8-22 keV

Broad bandpass optics *essential* for nanodiffraction and nanospectroscpy

- **Orders of magnitude greater flux for nanobeams**

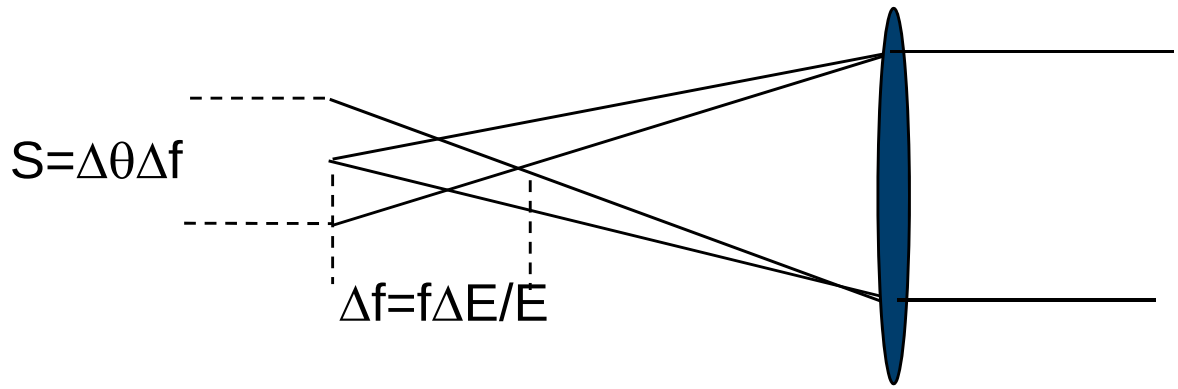

- **Simplified scanning**
  - **XAFS**

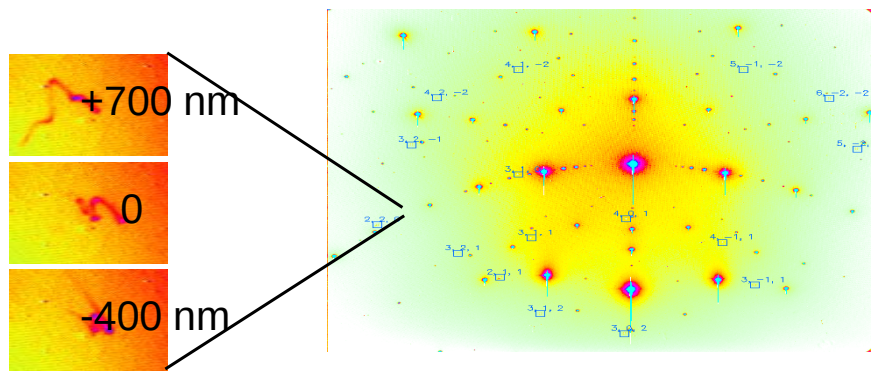

- **No sample rotations for diffraction**
  - **Laue**
  - **E scan through reciprocal space**

Achromatic optics particularly important for nanobeams

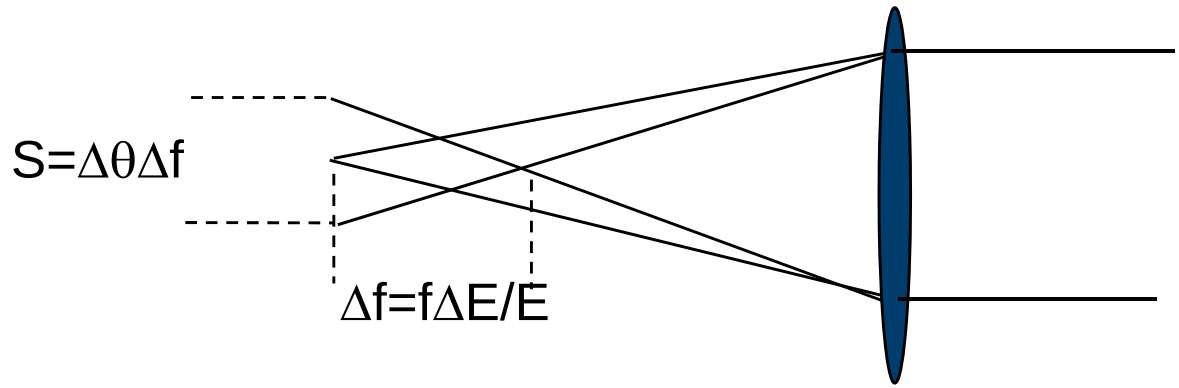

- **Diffraction limits bandpass of chromatic optics**
  - **Bandpass scales as size^2**
  - **@100 nm scanning limited**
  - **@1 nm 10^4 fewer x-ray**
  - ***Required nm +fsec***
  - **1fs⌫300 nm**

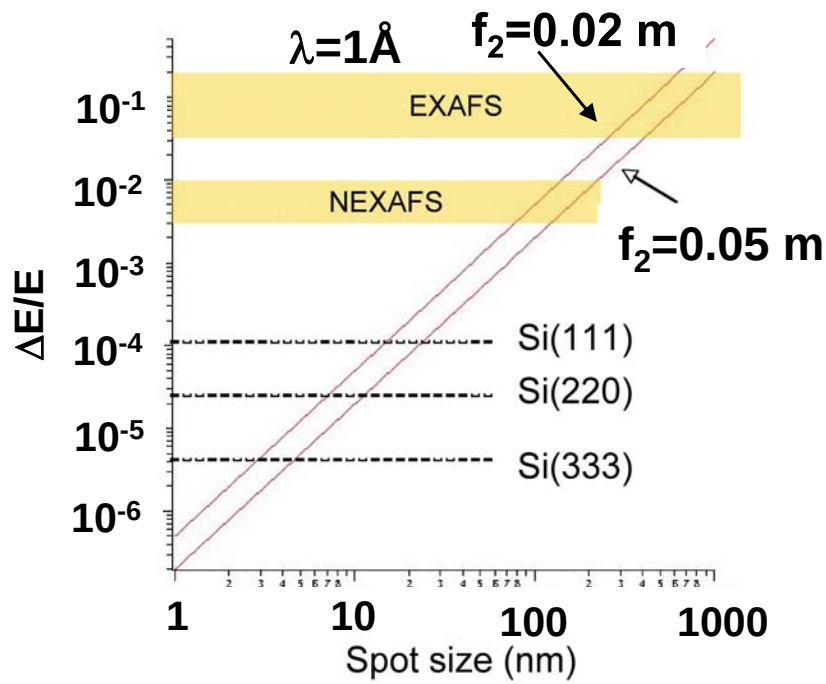

Broad bandpass optics competitive

- **Best achromatic optics- *at least* equivalent to alternatives**

- **Mirror perfection allows more complicated optical schemes**

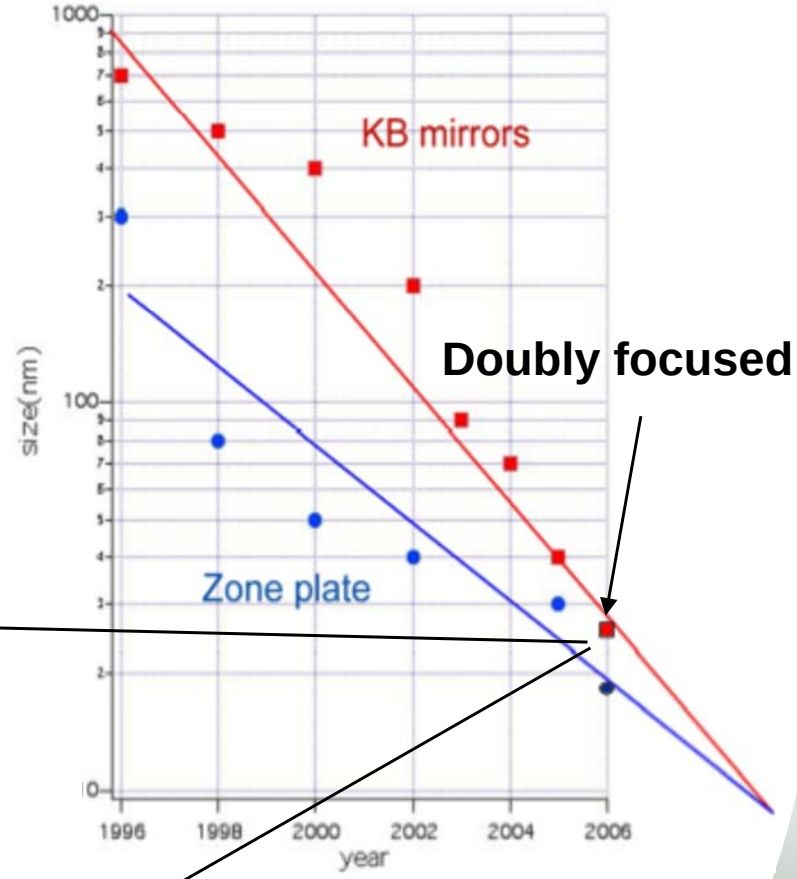

Osaka mirrors

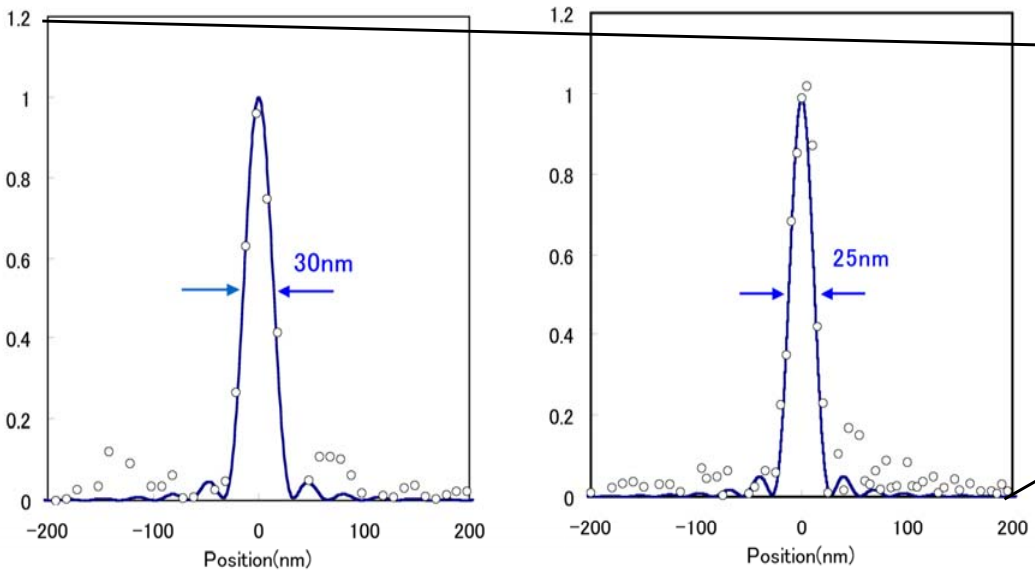

Nesting increases numerical aperture/ diffraction limit

- Osaka mirrors near diffraction limit

- Nesting improves by ~ 40%

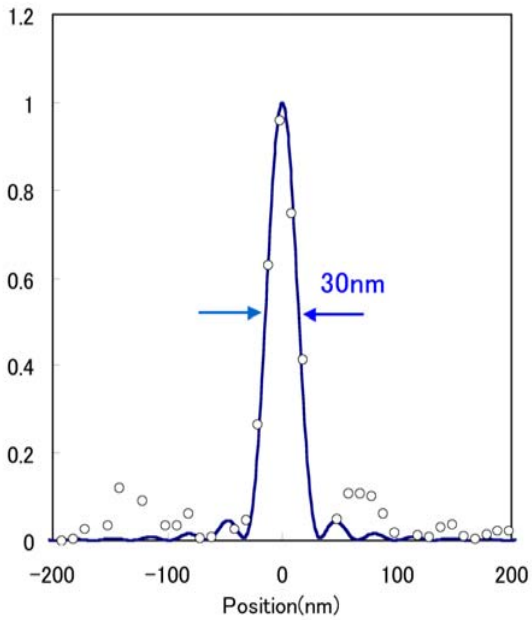

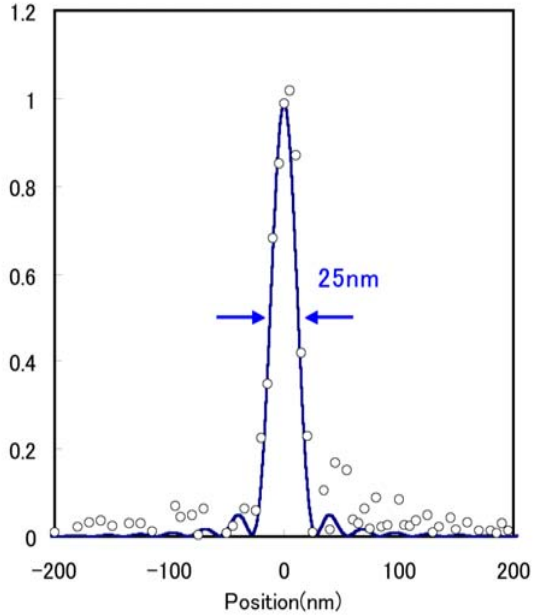

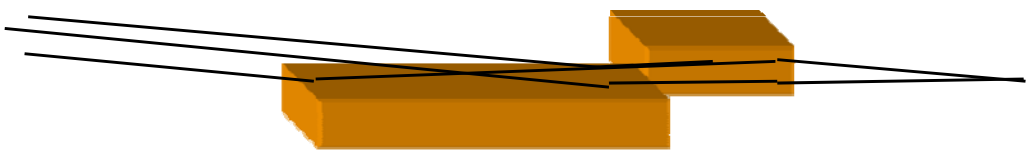

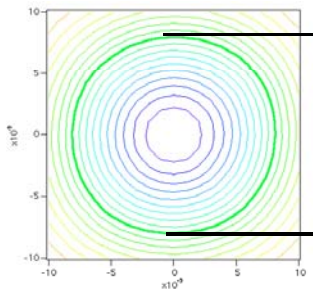

17 nm

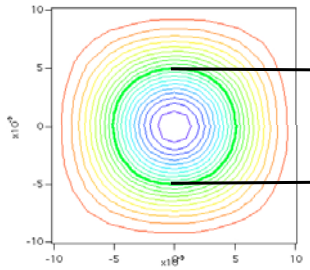

11 nm

Nesting reduces effect of figure errors/ vibration

- **Same aperture**
- **One mirror ~2.5 x Closer to sample**

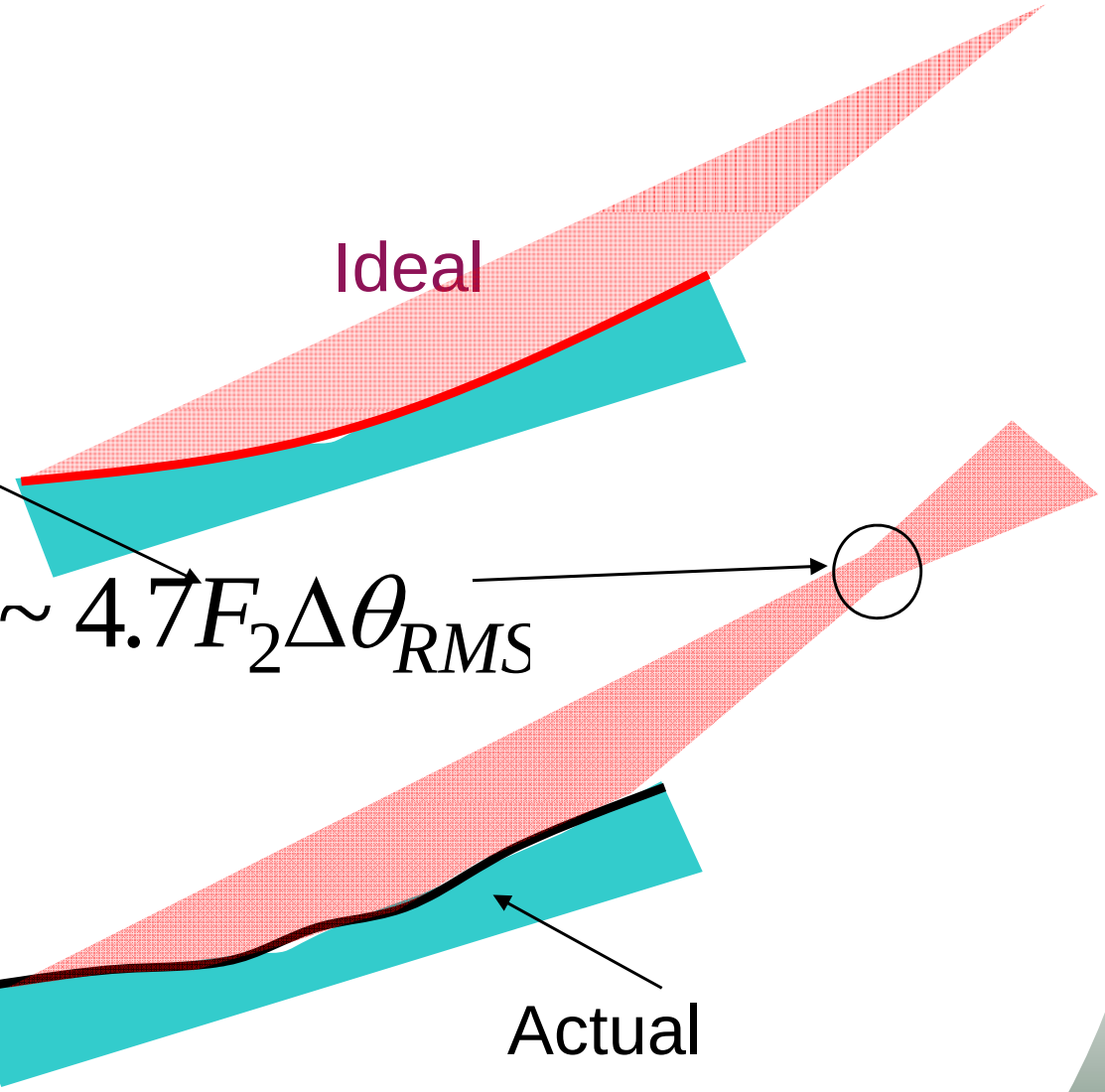

$$\Delta X_{FWHM} \sim 4.7 F_2 \Delta\theta_{RMS}$$

1st and 2nd reflections near corner

- **Superpolished finish near corner**
- **Any gap loses flux**

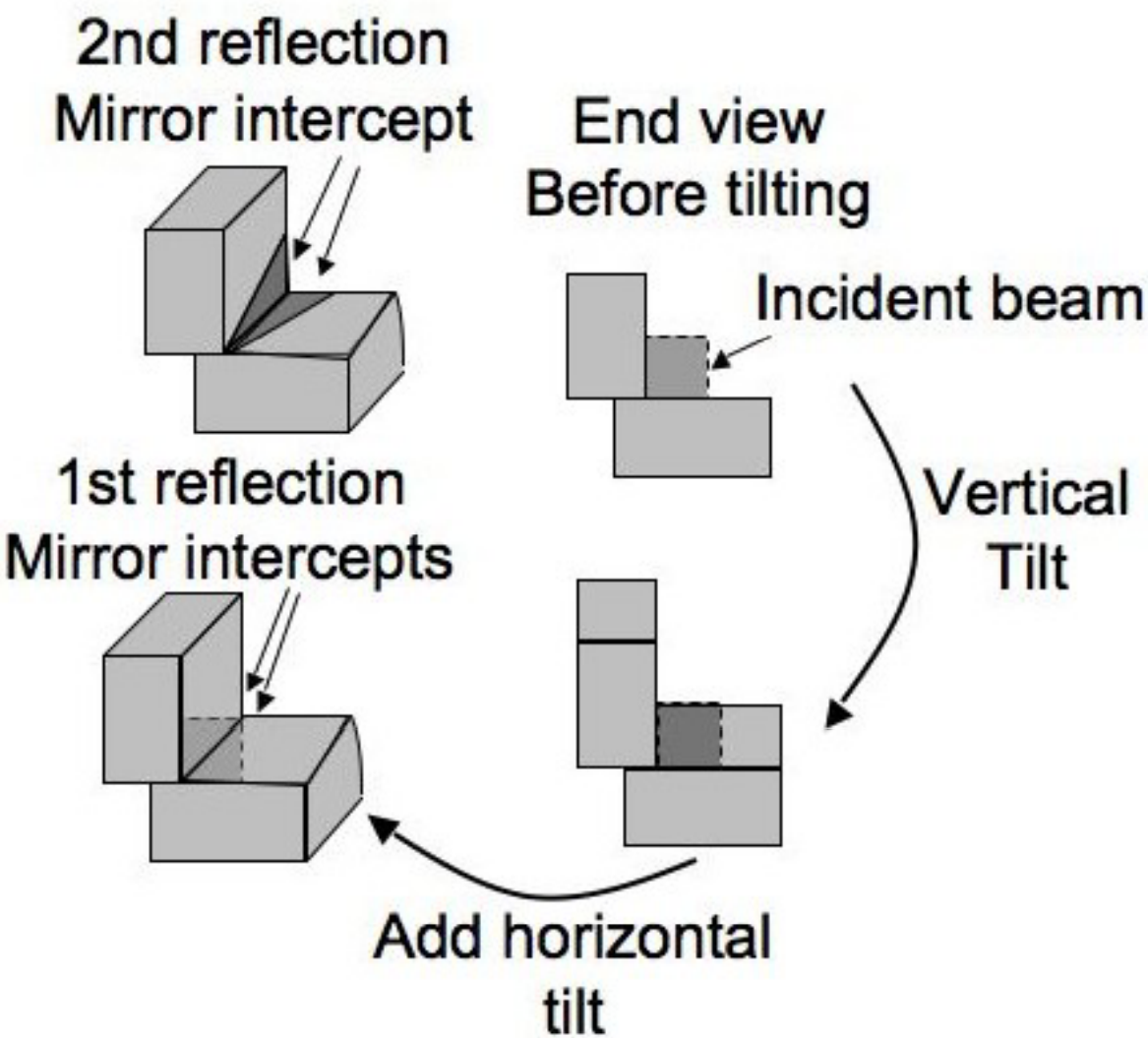

90% gain 120x 120 μm^2 beam ⊘ <12 μm gap

Two ways to position mirrors

- **90° edge**
  - **One mirror untouched**
  - **One edge should be cut with elliptical shape**
  - **Straight approximation gap ~5 μm**
- **45° edge**
  - **Both mirrors cut with 45° bevel**
  - **Difficult to position**

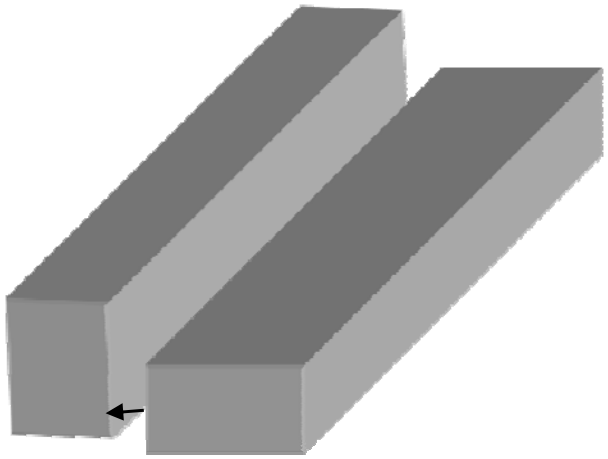

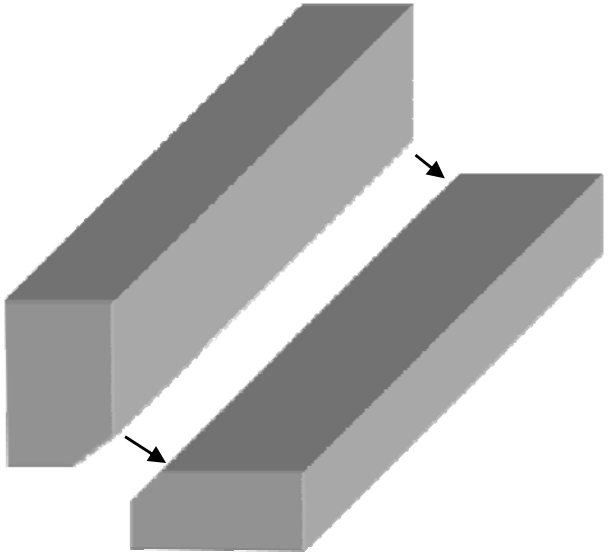

Confident we can procure mirrors!

Major mechanical challenges

Challenge	Approach
High-frequency angular changes from vibration **<0.4 μrad pitch errors** 	**Pre-align where possible-** ***minimize motorized motions*** **and range** **Low density/stiff materials** **Use long lever arms** **Use mixed modulus materials**
Long-term drifts due to thermal motions **<20 nm displacements** **Osaka/Spring-8 experience long thermal stabilization**	**Low thermal expansion materials** **Double enclosures** **Robotic sample handling?** 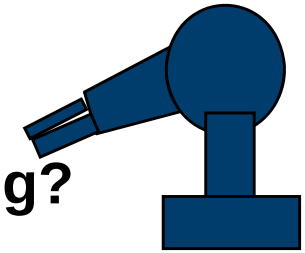 **Ratiometric thermal stabilization**

Entire system will reside on stable optical base (rock)

- **Huge mechanical/ vibration inertia**
- **Large thermal mass**

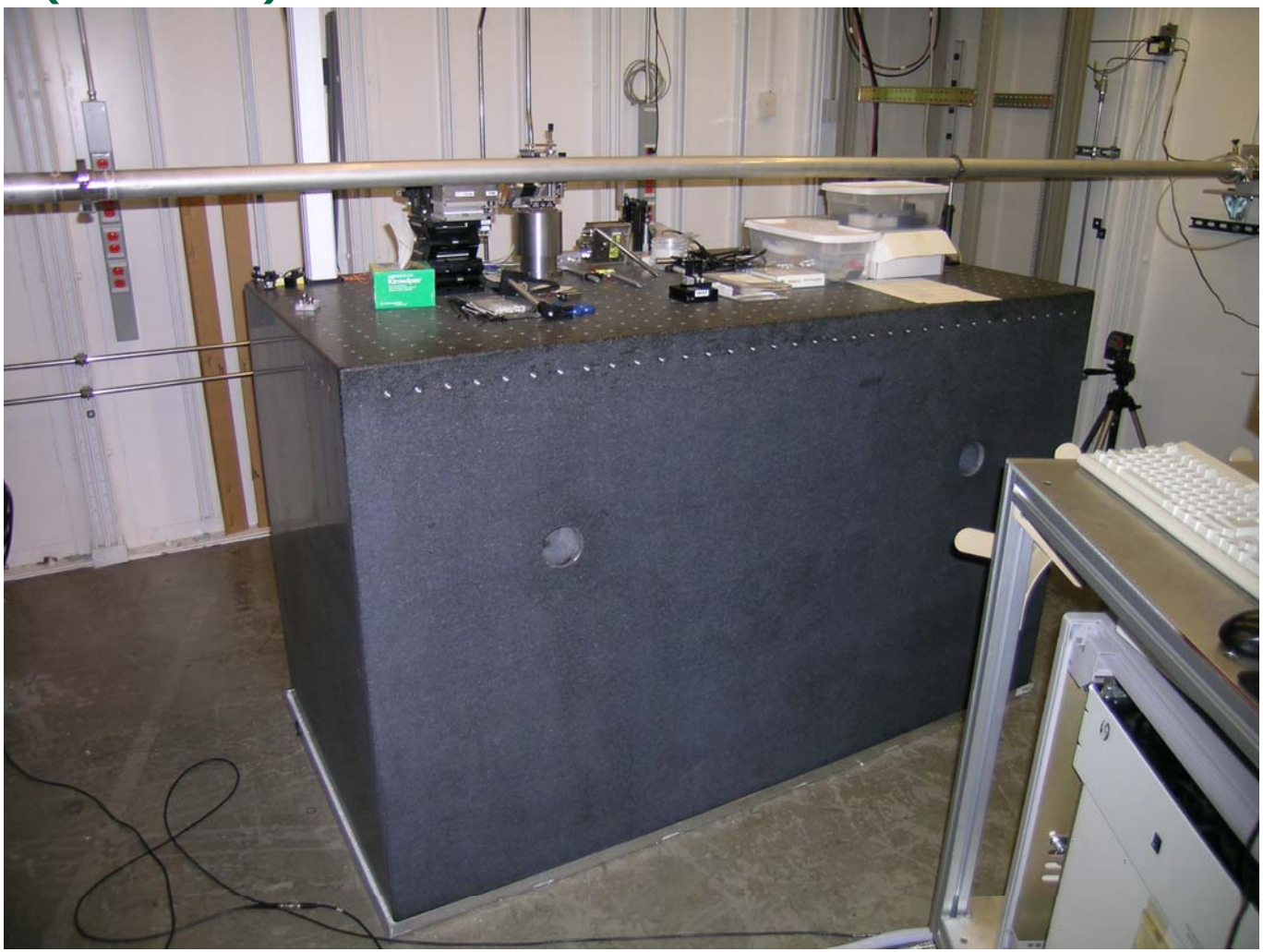

Mirror assembly will have no motorized motions

Mirror 2
Positioned against Mirror 1
With fine-pitch screws
(front and back). Roll controlled
With precision shims.
No control of relative yaw.

Mirror assembly

Mirror 1

Fixed relative to assembly bracket

Leaf spring

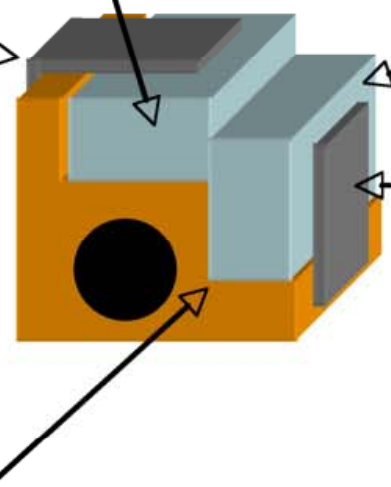

Leaf spring

Machine clearance

ΔZ ~0.1 mm (feel)

ΔX ~5 μm (microscope)

Yaw ~10 mrad (machine)

Roll <0.3 mrad (6 μm laser interference)

Exploring options for 2 or 4 motorized motions

- **4 motions is traditional**
  - **Mirrors centered on beam**
- **2 motions more stable**
  - **Upstream slit centers beam on mirrors**
  - ***OR* upstream mirror centers beam on slit centered on mirror**
  - **Difficult initial alignment requires careful survey**

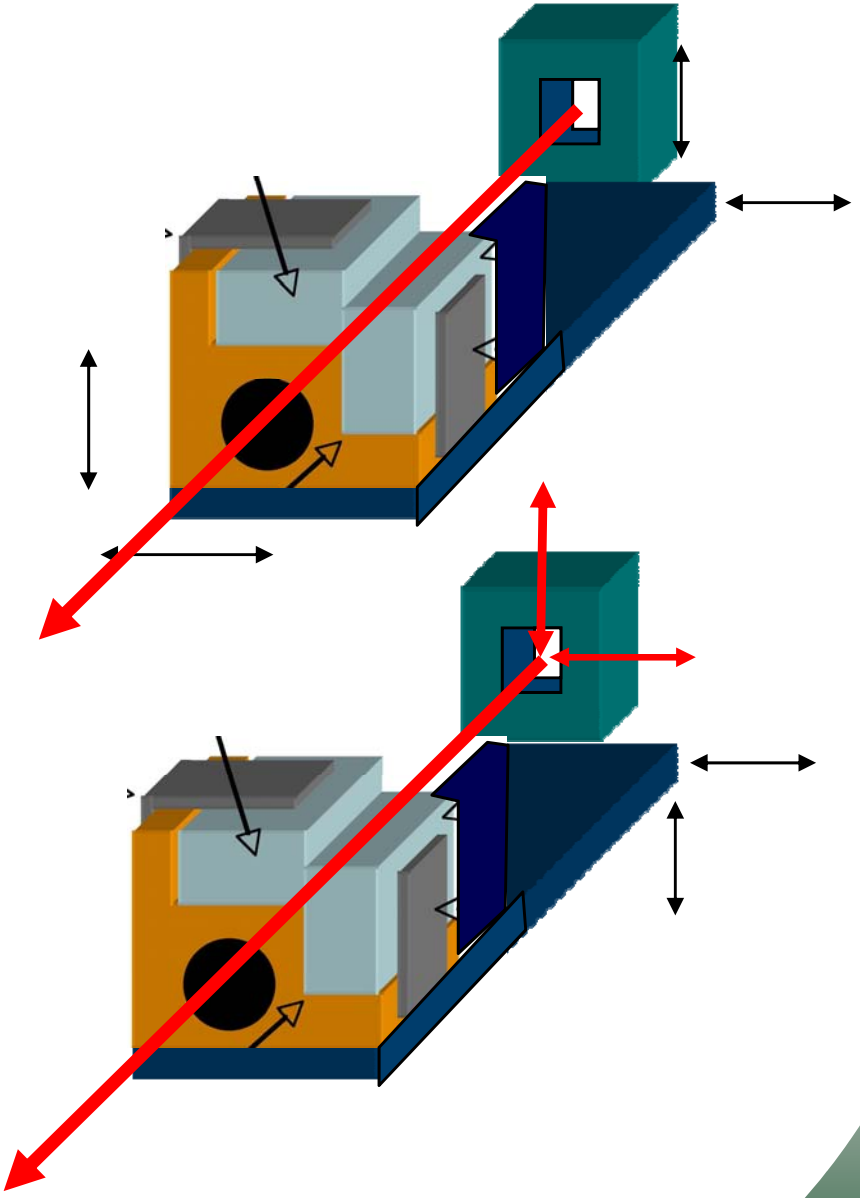

Radical approaches needed for sub 10 nm

- **Multilayers- 4-5 nm**
  - **ESRF/Osaka**
  - **Limited bandpass-ideal for undulator harmonic**

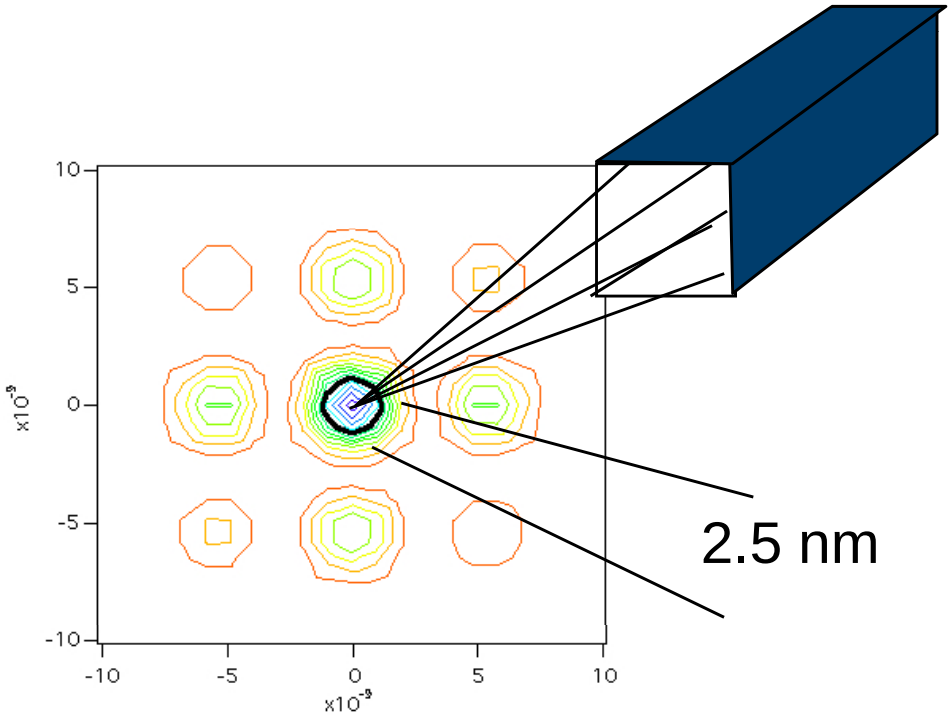

- **Confocal approach (factor ~4-6 3nm)**
  - **4 corner**

- **Combination of both→→1 nm**

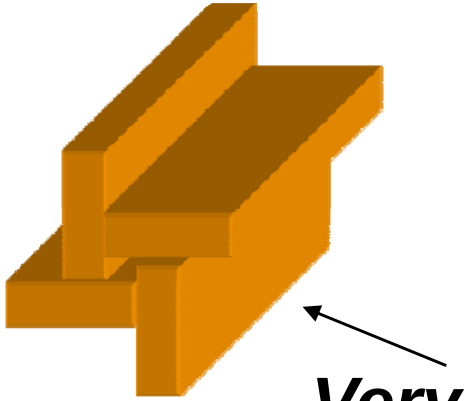

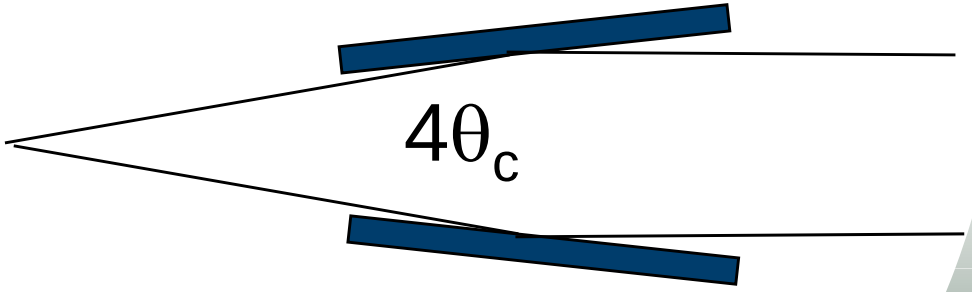

Very difficult alignment!!

Summary

- **Polychromatic nanobeams essential for synchrotron science**
- **We are designing an ultra-stable mirror positioner for nested mirrors**
- **Strategies for stability rely on pre-alignment and mechanical simplicity**
- **Welcome advice**

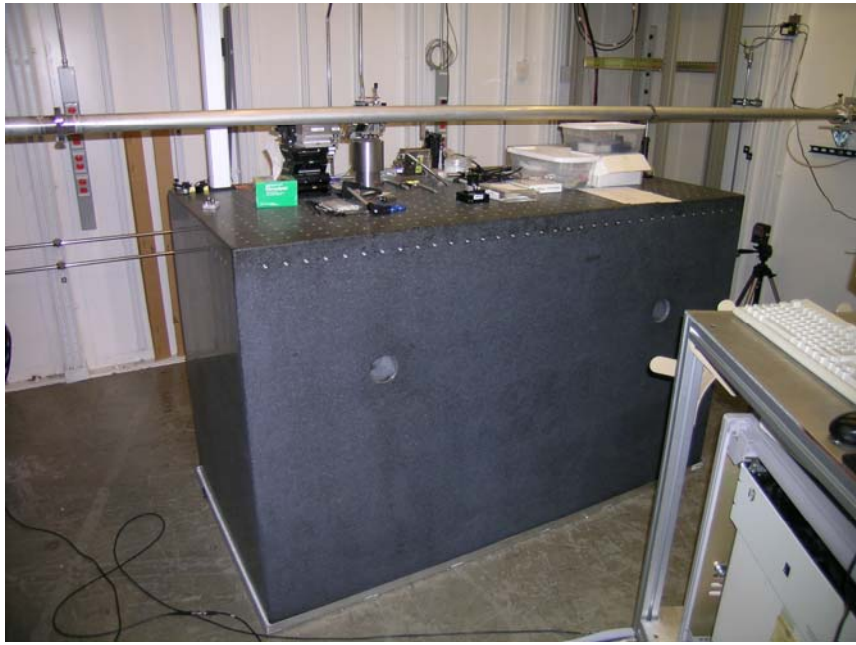

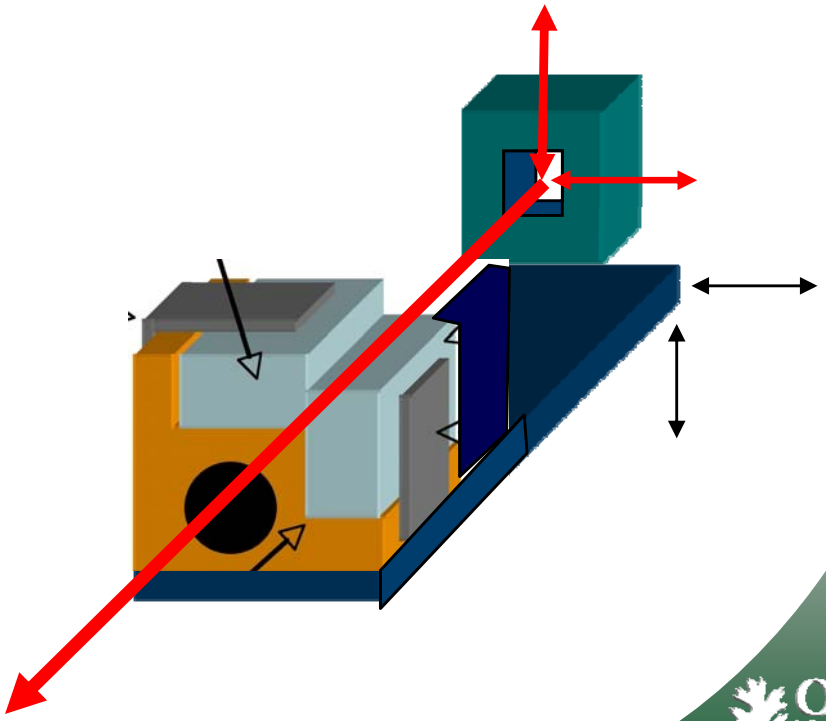

Nested mirror Song

Position nested mirrors for nanobeams
Mechanical designs pushed to extremes
μm precision, μrad too
How to orient? what to do?

CHORUS
The payoff as you've heard from me
Nanoprobe crystallography
And fluorescence with- 1 to 2
Orders more flux- think what you can do

Vibrations and thermal drifts are bad
Wreak resolution- its really sad
We'll try some strategies and see
How stable things can be- its not clear to me

CHORUS

Start with a rock it is our base
Helps keep the focus- in the right place
Mechanical simplicity is a goal
Just as long as alignments still under control
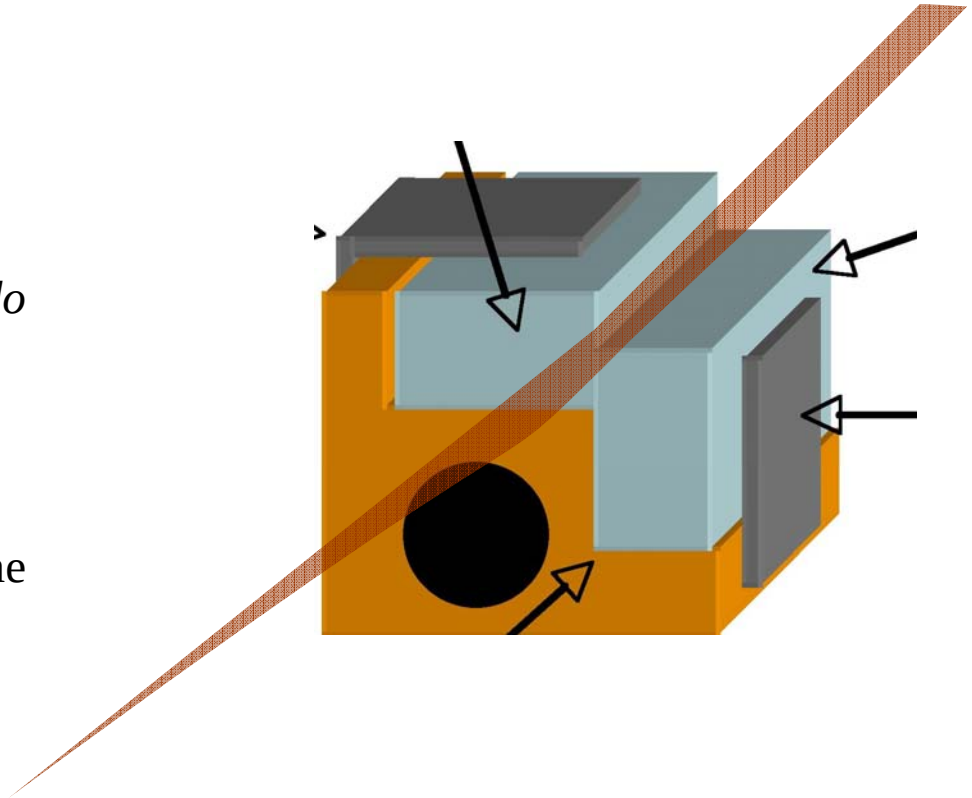
CHORUS