Compact and leight-weight design of a Martin Puplett Interferometer for synchrotron radiation beam measurements

Daniel Rossetti , Baechli Hubert, Emanuele Japichino , Urs Ellenberger , Volker Schlott

Paul Scherrer Institut, 5232 Villigen PSI, Switzerland

Outline of talk

Operation of a Martin Puplett Interferometer (MPI)

Characterization of synchrotron radiation beam quality

Current and improved design

Issues of stability

Design of portable MPI

Outlook

Operation of Martin Puplett Interferometer (MPI)

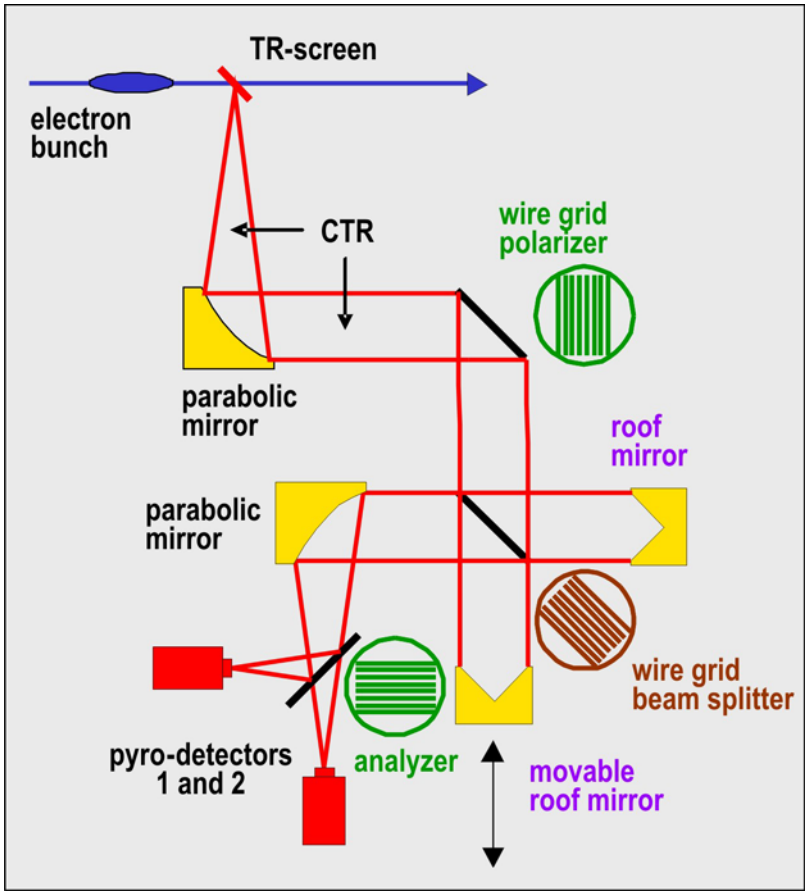

Similar to Michelson interferometer but uses state of polarization instead of energy.

Provides autocorrelation measurement of intensities but no phase information (TR = transition radiation)

Difference interferogram from both detector signals eliminates fluctuations and is the cosine Fourier transform of incoming radiation spectrum.

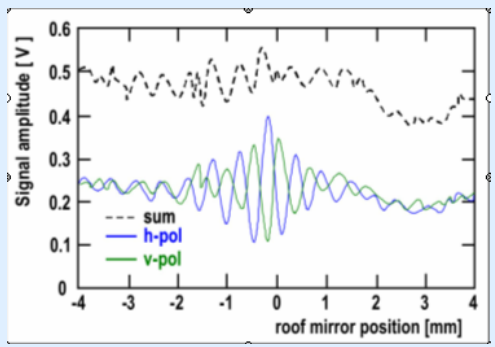

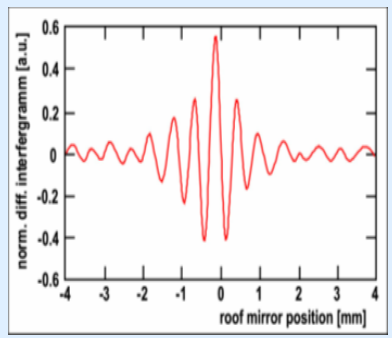

To be used with coherent radiation (i.e. transition, synchrotron)

Characterization of synchrotron radiation beam quality (1/3)

Femto bunch slicing in SLS storage ring

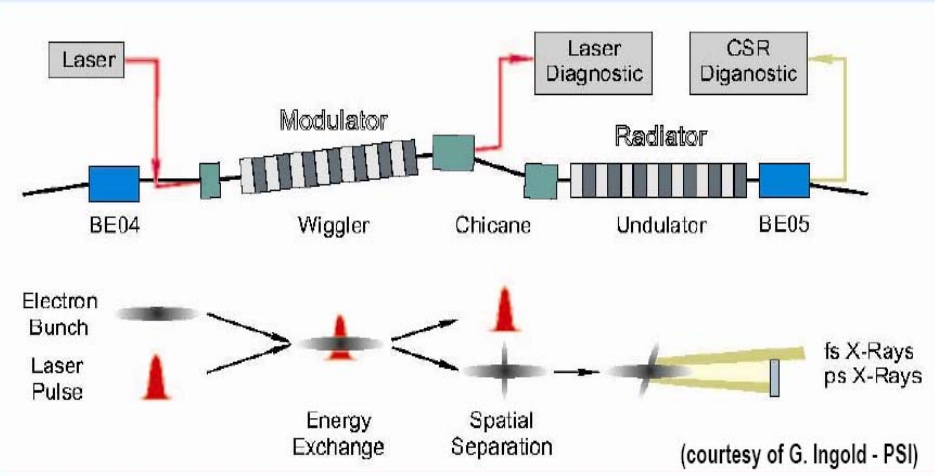

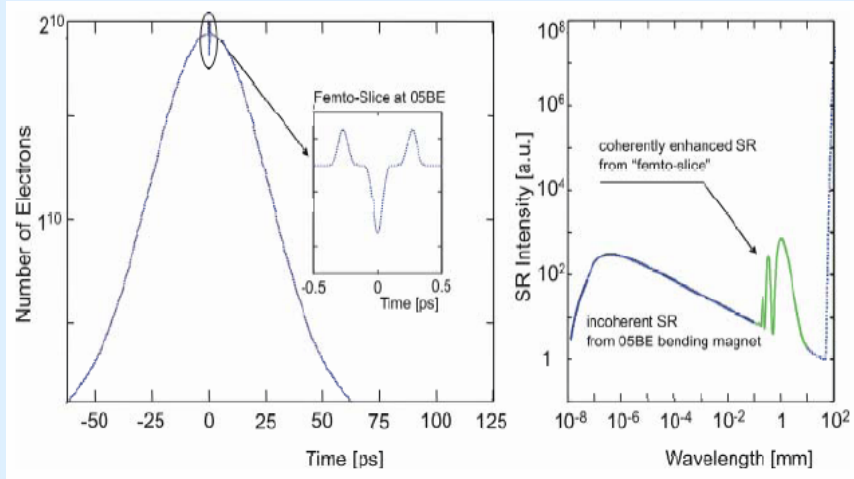

(Courtesy of V. Schlott – PSI)

bunch length meas. with coherent radiation typical units: **1 ps** ~ 1 THz ~ 300 μm ~ 33 cm^{-1} ~ 4.1 meV ~ 47.6 K
100 fs ~ 10 THz ~ 30 μm ~ 333 cm-1 ~ 41 meV ~ 476 °K

Characterization of synchrotron radiation beam quality (2/3)

Coherent Radiation – Example of SLS FEMTO THz Beam Transport Line

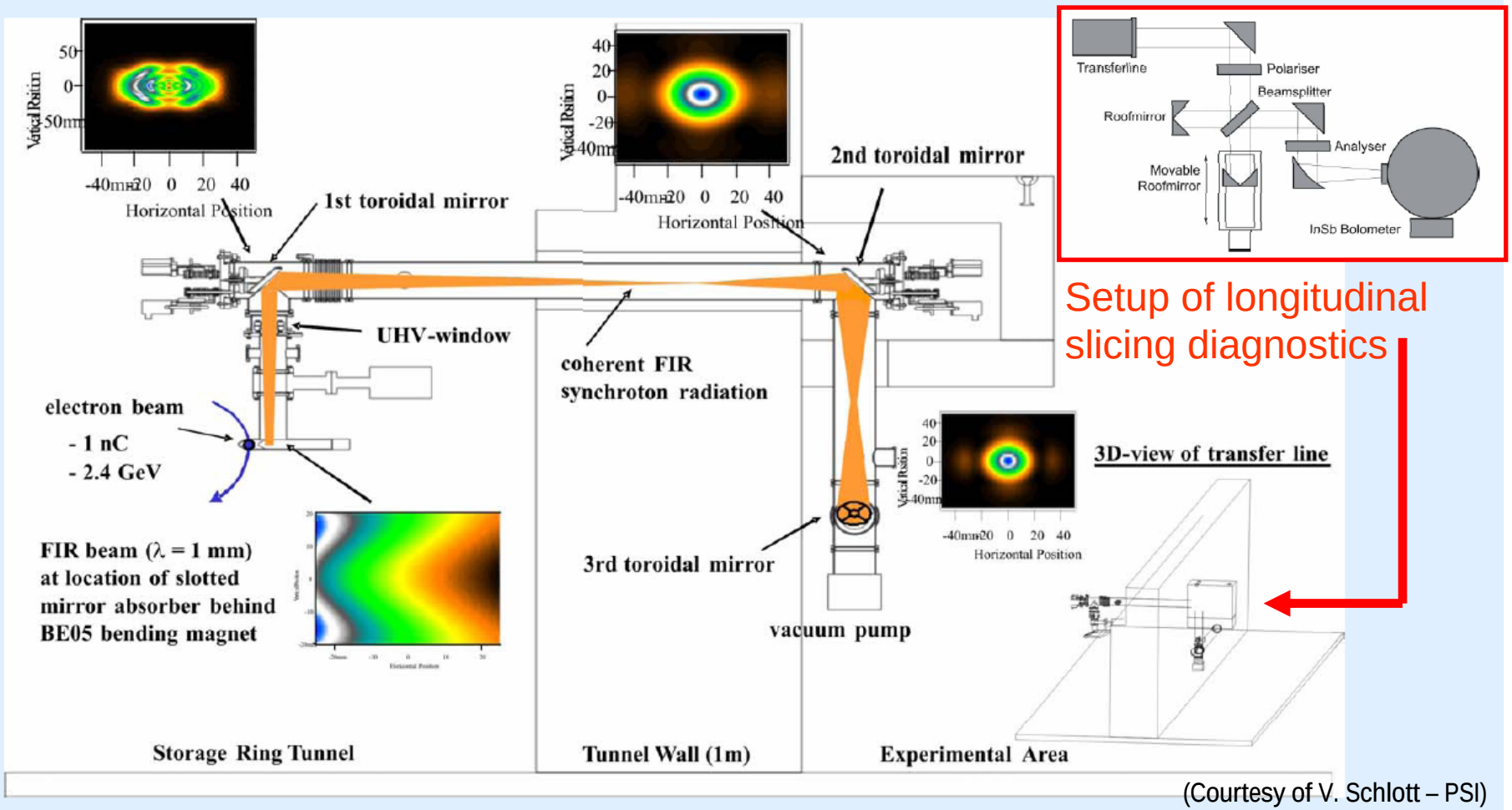

Setup of longitudinal slicing diagnostics

(Courtesy of V. Schlott – PSI)

Characterization of synchrotron radiation beam quality (3/3)

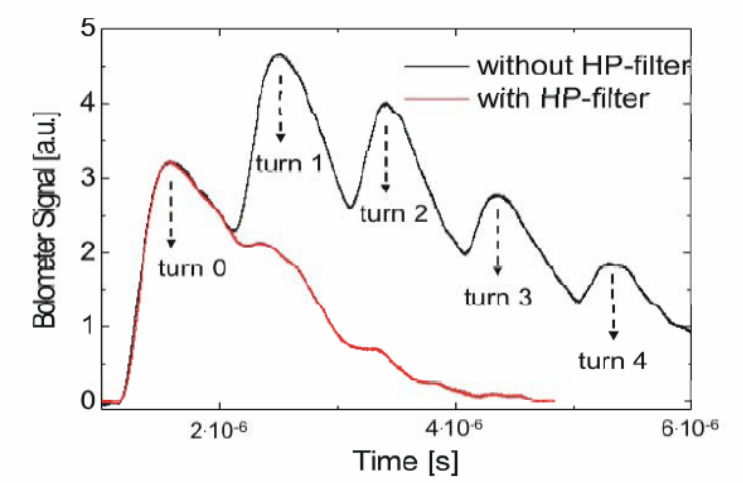

Turn-by-turn THz signal (revolution time of 1 µs, dilution time 8 µs) from InSb bolometer (bandwith 1.25 MHz, with and without thick-grid high-pass filter, cut-on 10 cm^{-1}).

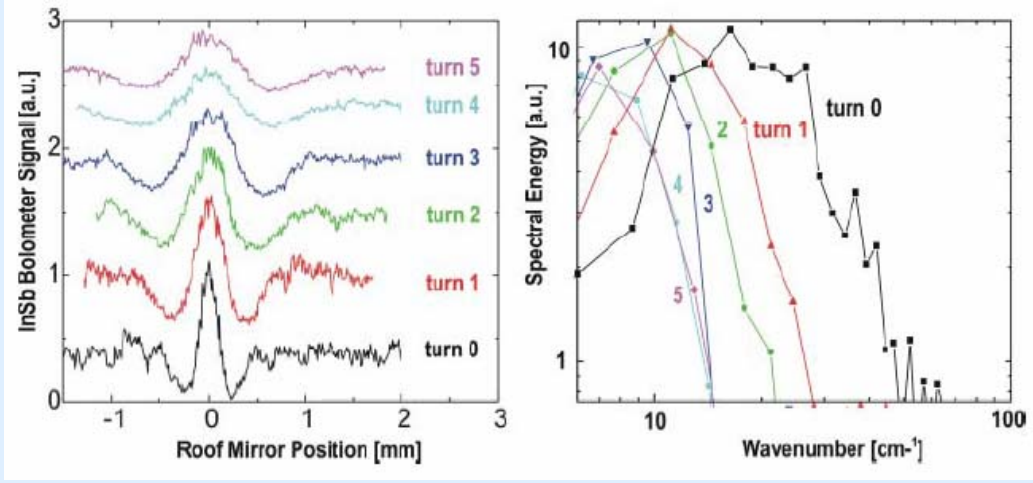

Interferograms (left) and spectra (right) taken with MPI for five turns in SLS storage ring after slicing event (turn 0). Spectral width of first turn is restricted by the InSb bolometer response function (cut-off at 35 cm^{-1}). Water absorption lines start above 20 cm^{-1}.

(Courtesy of V. Schlott – PSI)

Transfer Function of Femto diagnostics line:

- Transmission through windows (various materials)
- Diffraction (dimensions of optics) through THz transfer line
- Water absorption in air or in „dry“ nitrogen environment (i.e. glove box)
- Detector response function (i.e. InSb bolometer)

Current and improved design of MPI (1/2)

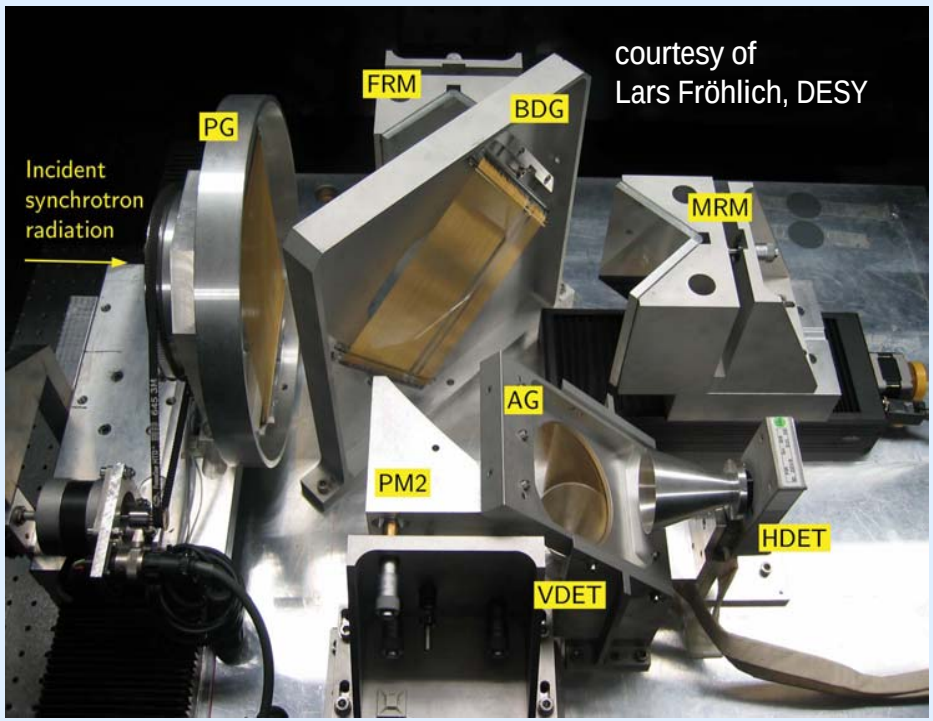

Current design:

- Mounted on a sturdy steel plate
- Polished copper mirrors (weight)
- Equipment is off-the-shelf (weight, tolerances)
- Operated in air or in a glass box in dry nitrogen atmosphere (water absorption)
- No optimisation in terms of vibration control or of minimal tolerances

Current and improved design of MPI (2/2)

Goals of an improved design:

- To be used on a SLS beamline (i.e. femto slicing) and along a LINAC (250 MeV injector, serves as test section for future XFEL at PSI site)
- Compact and portable (leight weight) or easily transferable along a LINAC
- Yet robust for quick and precise measurements of coherent radiation
- Optimised for minimal tolerances and for stability (vibration control) in vacuum (no water absorption lines)

And how it is implemented:

- Use of standardized designed equipment to allow small series fabrication (only grids and translation stages are off-the-shelf, rest is in-house made)
- Use of high-strength aluminum alloy (AlZnMgCu1.5, EA NW-7075, DIN 3.4365)
- Mirrors and mounts are of one piece (diamond fly cutted mirror surfaces)
- Use of honeycomb structures inside and of extra reinforcement at the base of the vacuum chamber

Design of portable Martin Puplett interferometer

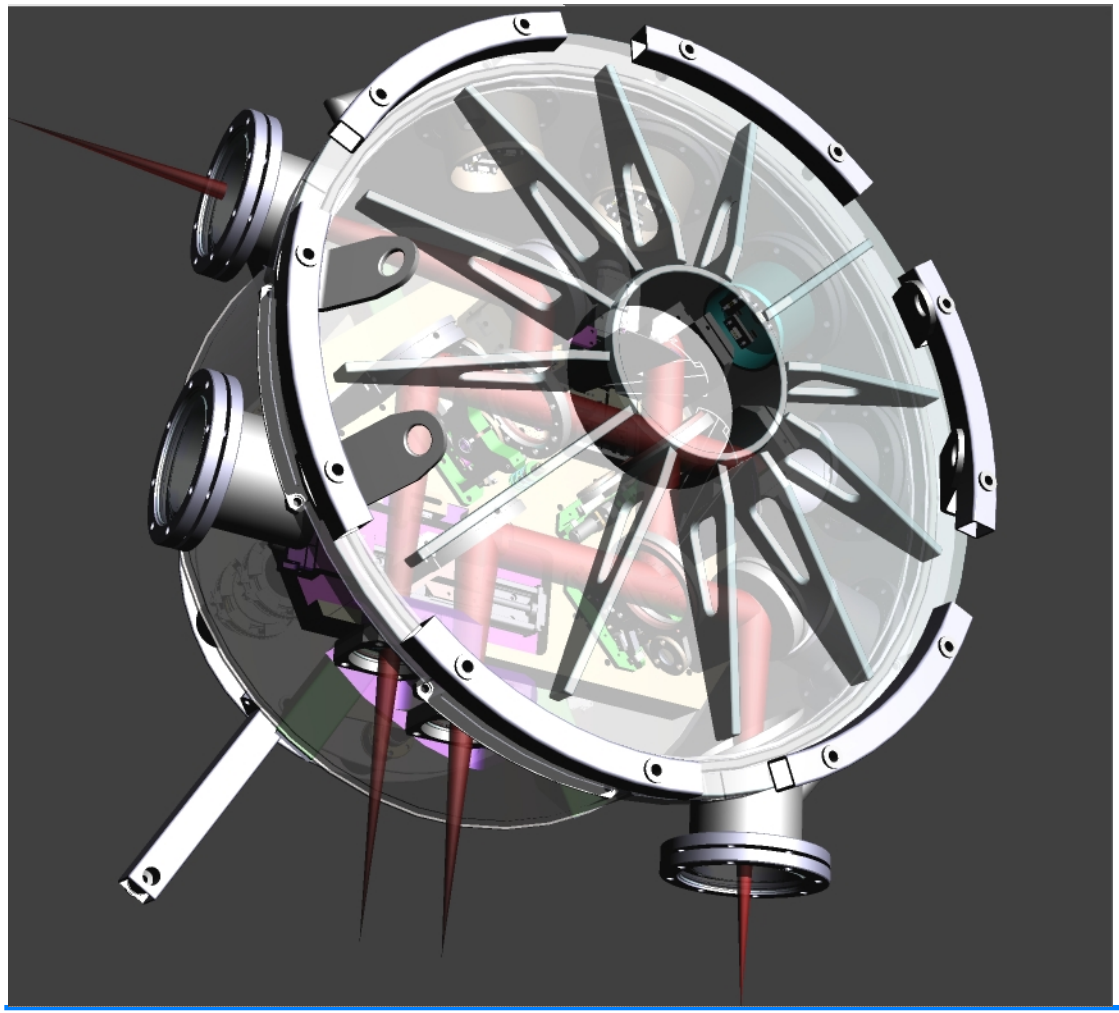

supports for vacuum chamber and for base plate

base plate

polarizers and roof mirrors

parabolic mirrors

beam path and beam stoppers (fans)

vacuum chamber with flanges

transparent cover of plastics (PMMA)

Issues of stability (1/2)

Data of MPI: Diameter of about 1 m, weight of ~ 100 kg, approximately 0.2 mbar

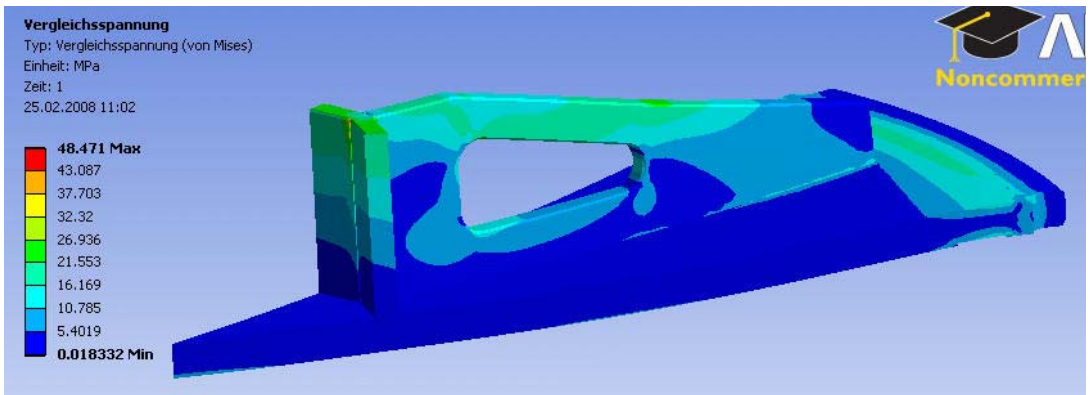

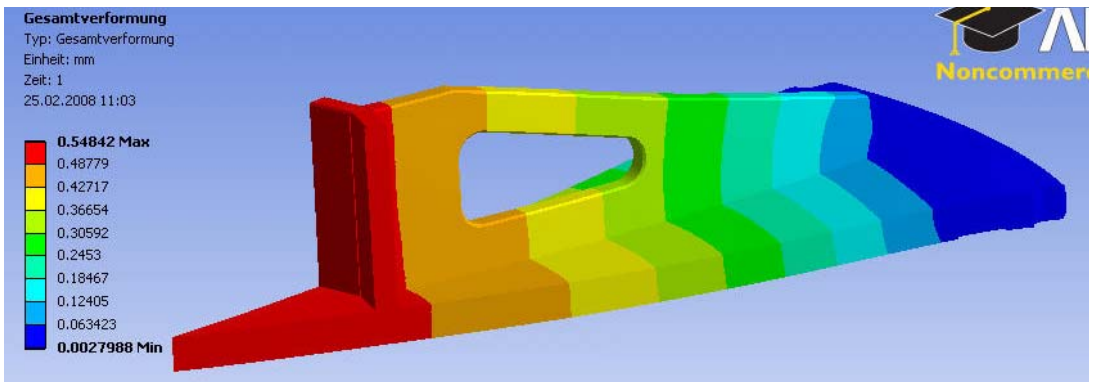

ANSYS calculations of cover

- Maximum stress of 33 N/mm^2 (factor of 1.8 below yield strength of 70 N/mm^2 @ PMMA)
- Maximum deformation is 0.55 mm in the center of the cover
- Safety factor of 3 above Mohr-Colomb curb stress
- Glue experiences tensions between -4 to 14 N/mm^2

Issues of stability (2/2)

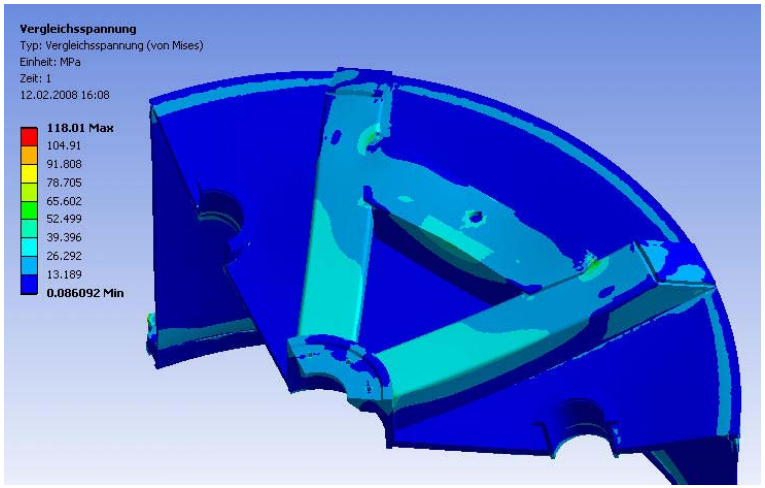

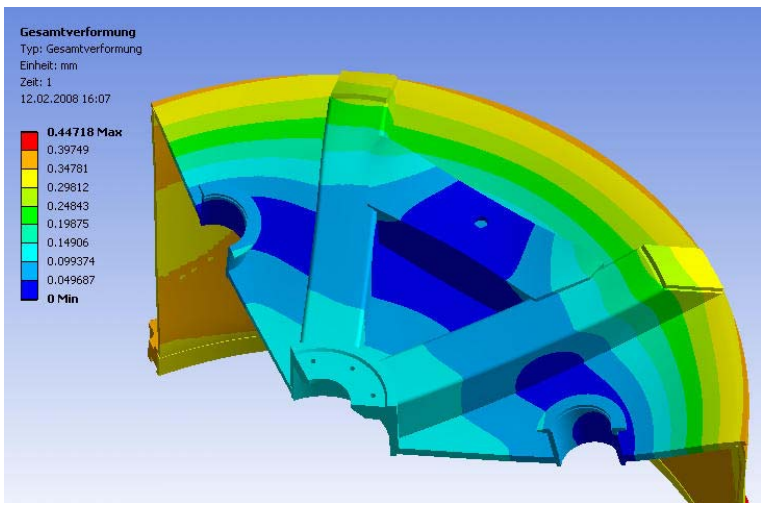

ANSYS calculations of vacuum chamber (wall and bottom with reinforcement)

- Maximum stress of 60 N/mm^2 (factor of 1.6 below yield strength of 100 N/mm^2)
- Because of welding a lower yield point of softer aluminum alloy is assumed like 100 N/mm^2 which is still o.k.
- Maximum deformation is 0.40 mm in the center of the bottom

Conclusions: Stress and deformations of the vacuum chamber are within acceptable limits

Some details of construction (1/6)

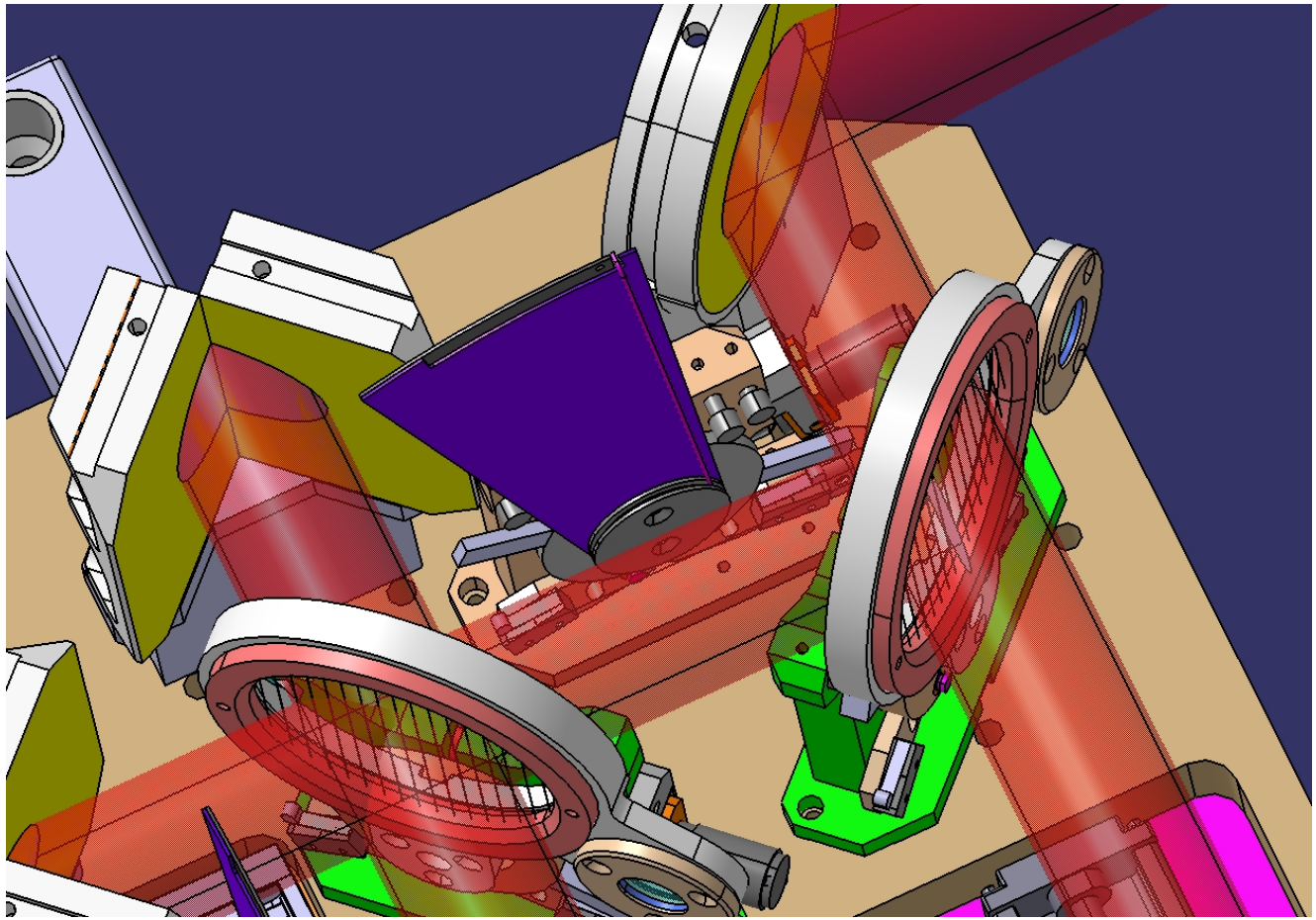

Because of narrow space beam stoppers are folded like fans while not operating.

Some details of construction (2/6)

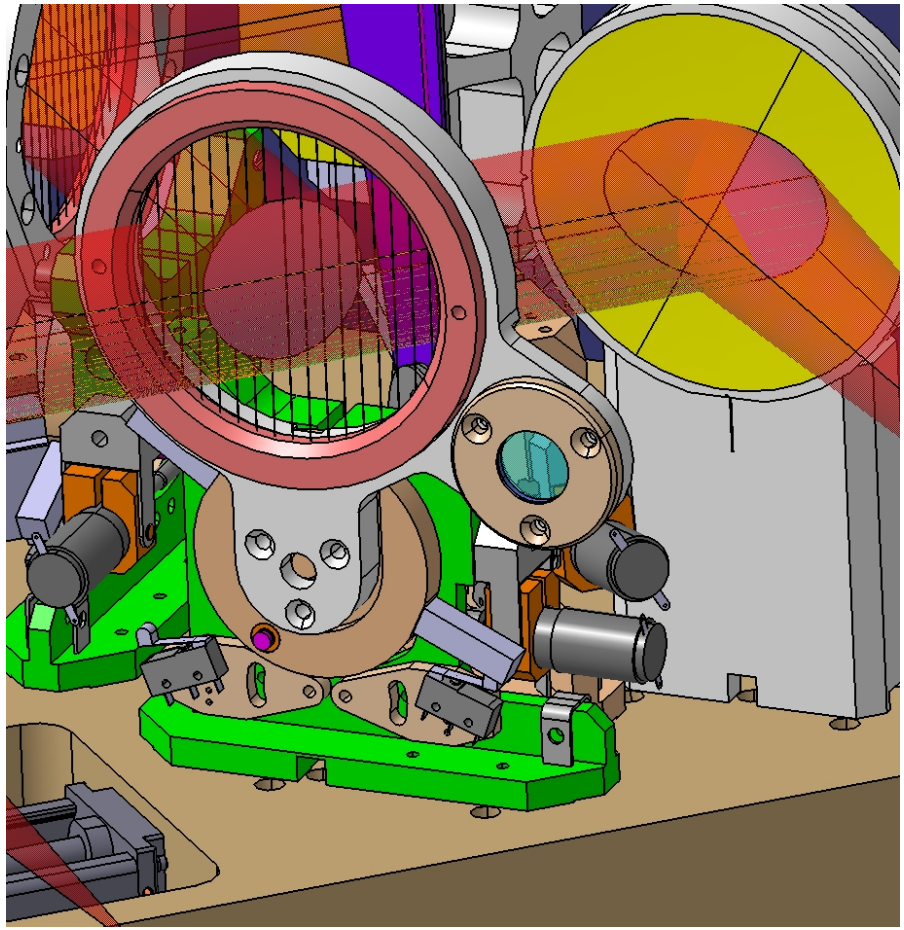

For alignment with a guiding laser beam semitransparent mirrors are inserted to simulate polarizers

Some details of construction (3/6)

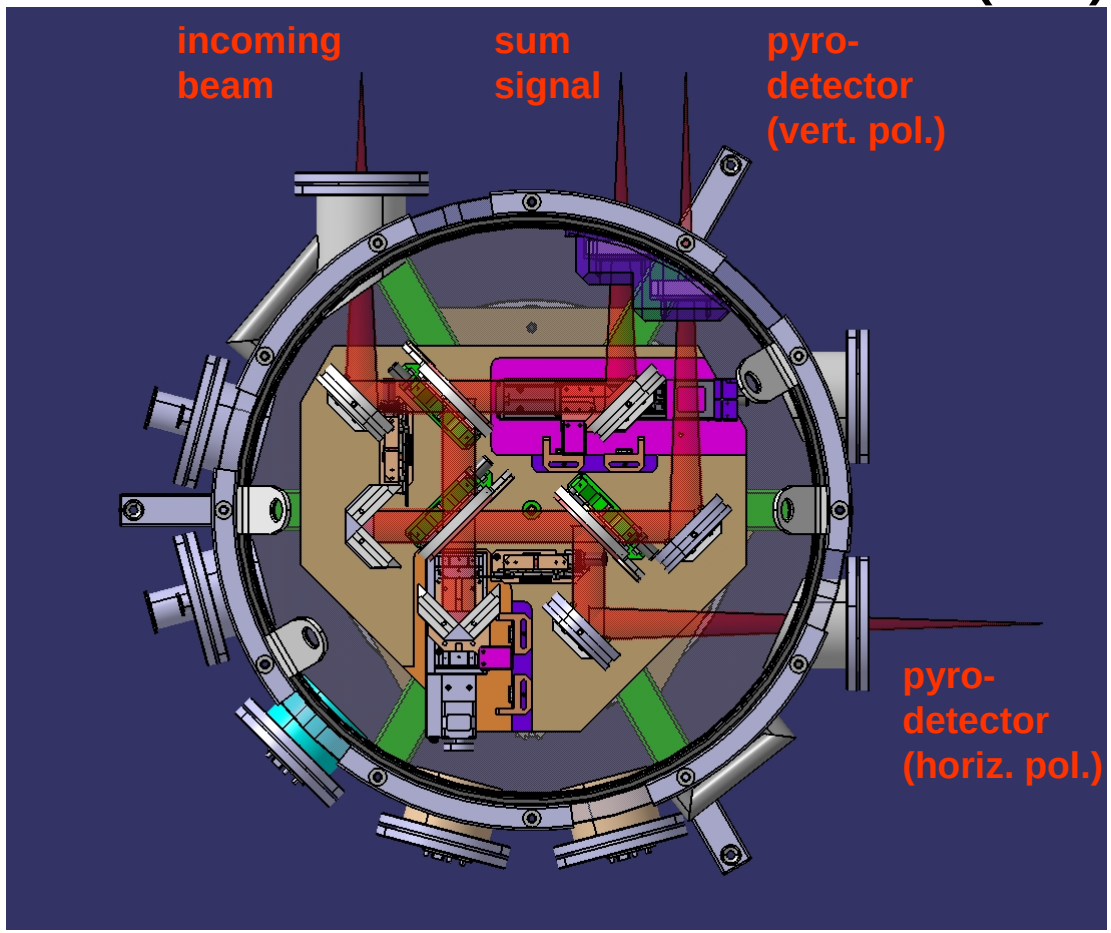

Moveable mirror between 2 positions allow the use of two detector setups.

Some details of construction (4/6)

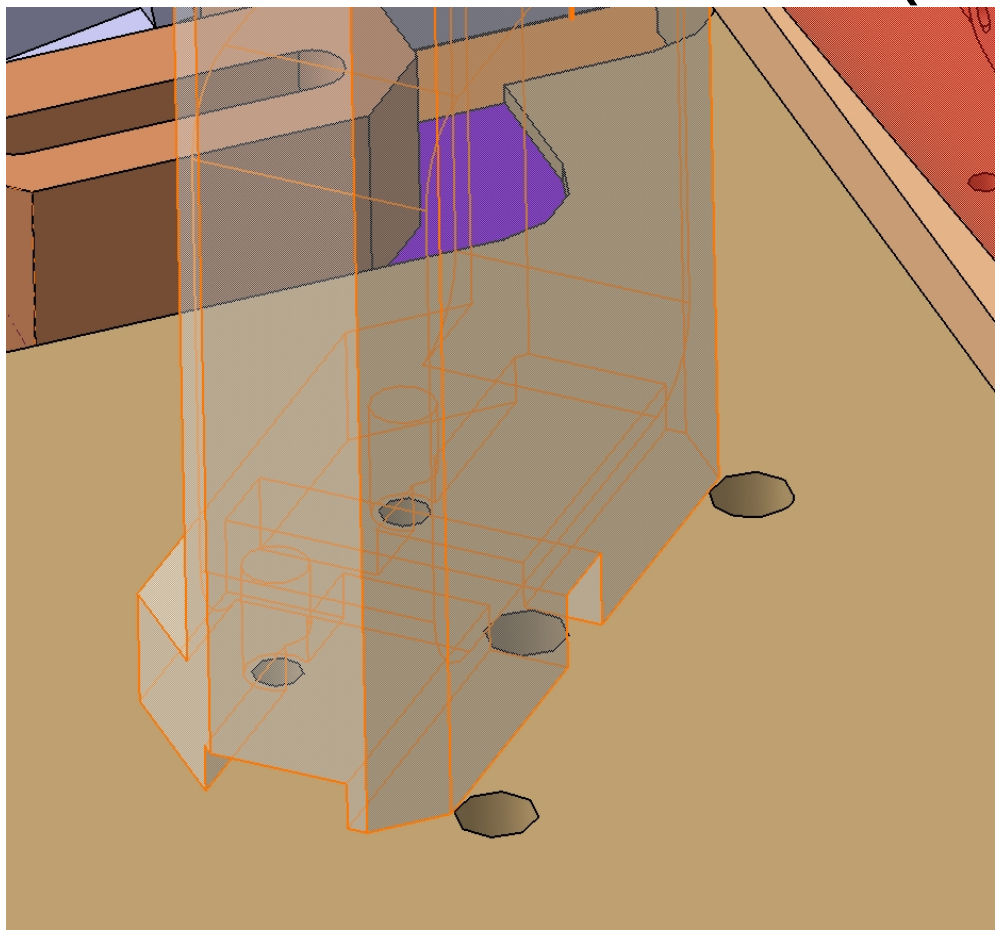

3 bolts, a guiding groove and two screws are required for repositioning components.

Some details of construction (5/6)

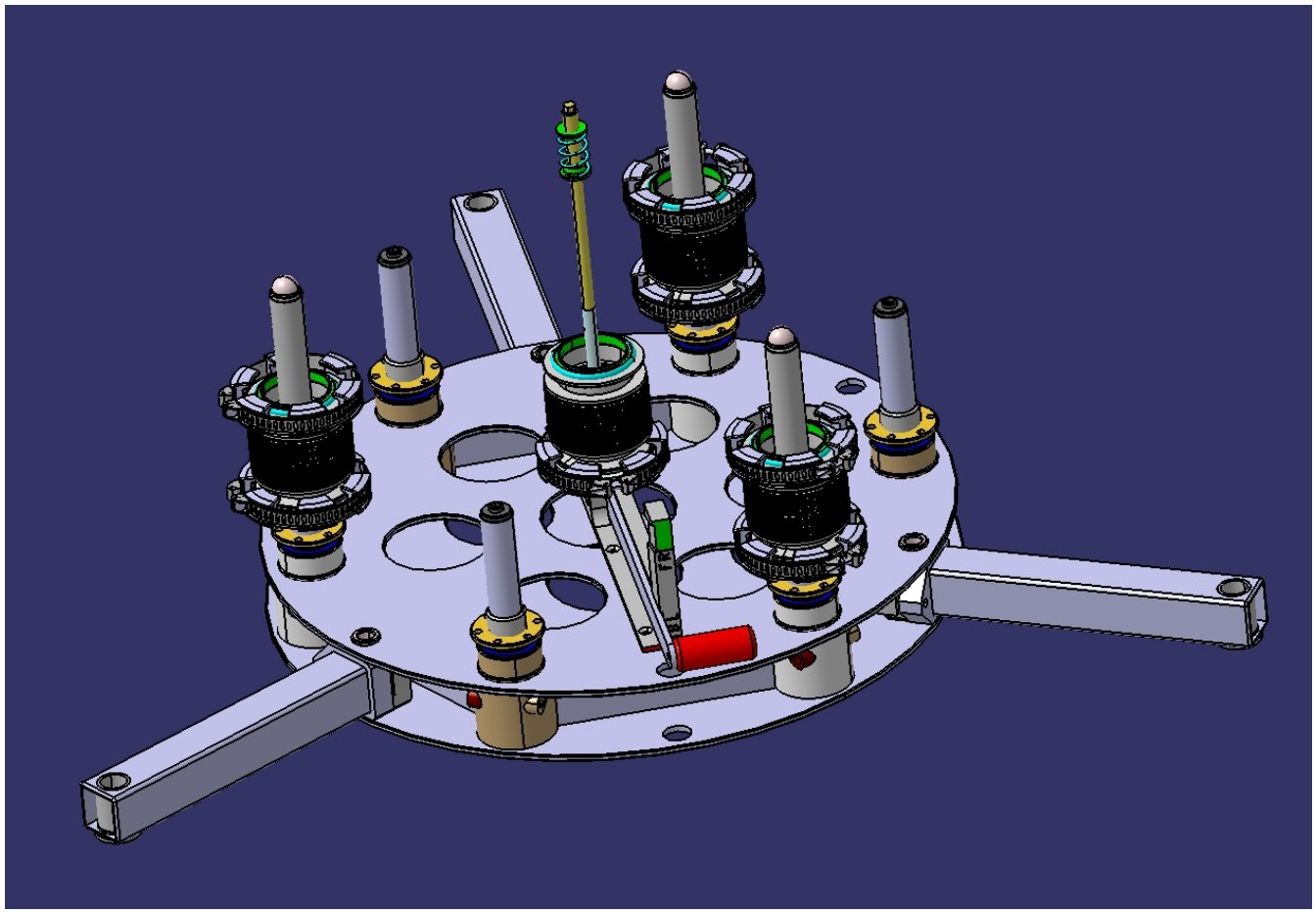

Base plate of MPI is decoupled from vacuum chamber and is aligned seperately. Note extra transportation lock.

Some details of construction (6/6)

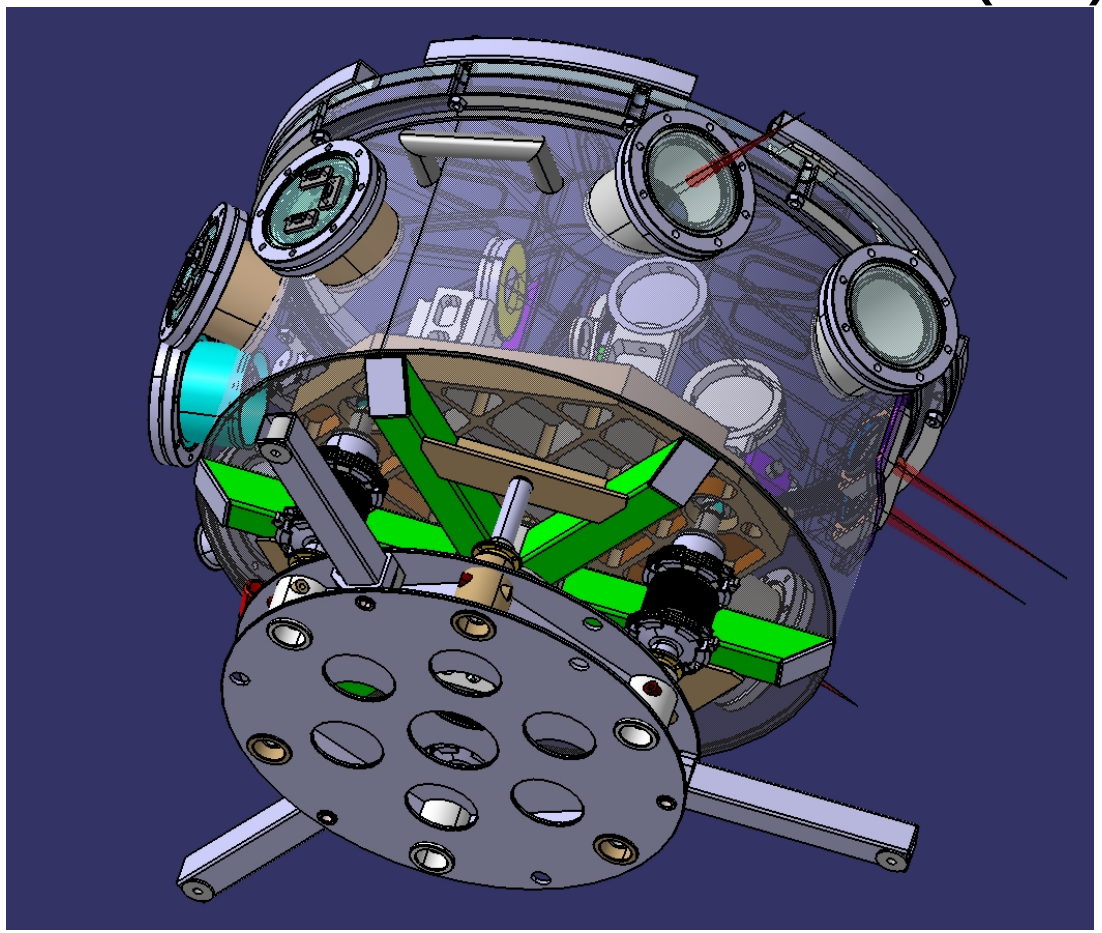

Weight reduction everywhere: Honeycomb structure of base plate of MPI, star-shaped reinforcement structure and base plate of vacuum chamber.

Outlook

- Fabrication in the machine shop has just started
- Assembly, testing and delivery are scheduled by the end of August 2008

Thank you for your attention!