Laue –Laue Monochromator for ID11 Beamline at ESRF

A. Stevanato*&, R. Baruzzo*, G.V. Lamanna*, G. Vaughan#, J. Wright#, A. Bytchkov#, C. Curfs#, C. Gundlach#, M. Rossat#, T. Buslaps#
(*) Cinel Strumenti Scientifici S.r.l; (#) ESRF-European Synchrotron Radiation Facility
& *Speaker*

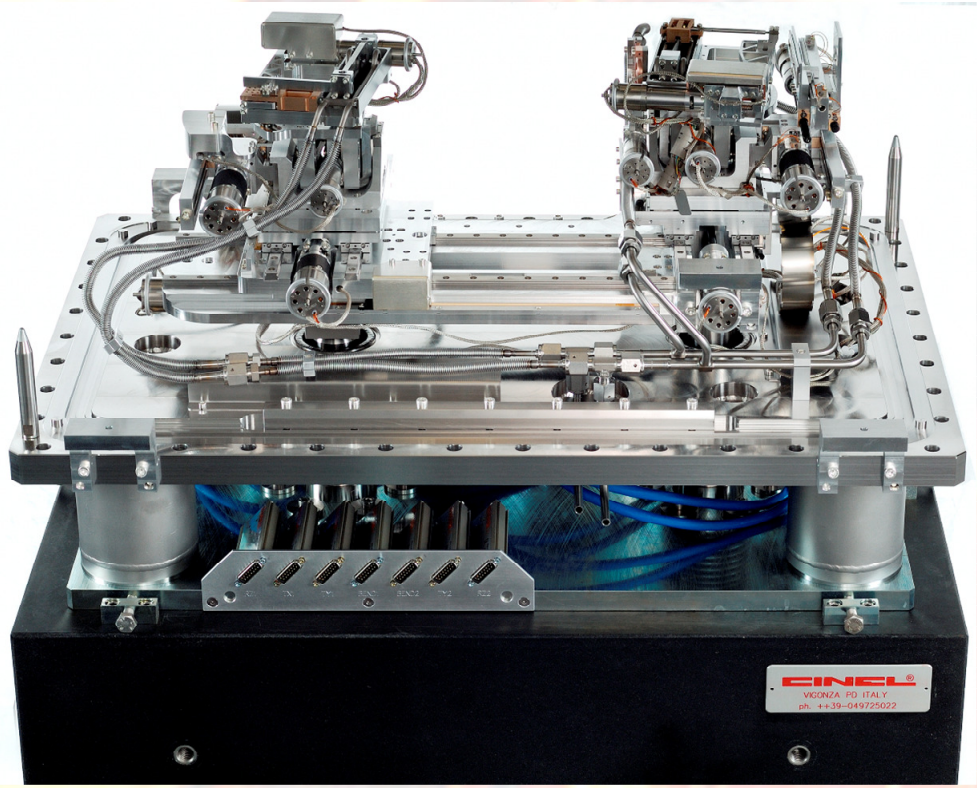

Outline

- Beamline Overview
- Design Issues and Criteria
- Monochromator in Details
- Preliminary Results

Beamline Overview

- *ID11 is a multipurpose beamline for diffraction experiments*
- *Two experimental hutches and an optics hutch are installed*
- *Bragg-Bragg monochromator provides monochromatic beam with a band-pass of $\Delta E/E \sim 10^{-4}$*

Design Issues and Criteria

Requirements

- Small “fixed exit” offset (10÷15 mm)

- Very compact configuration. Provide low photon energy (about 23 keV) when crystals are very close one to each other.

- Crystal benders designed to accept different crystal shapes

Design Issues and Criteria

Main Construction Goals

- *Very compact configuration 860 mm long, 590 mm wide: Crystals can be driven along the beam path up to a relative distance of 58 mm. Energy range: 22.7 keV ÷ 141.7 keV.*
- *14 Motorized axes all equipped with limit switches*
- 7 Encoded axis
- *Bragg angle selection is provided with stepper motor and piezo actuator for fine movements. Encoder detects real angular displacement*
- Crystal benders have been designed to accept different crystal shapes and thicknesses
- *Axes of the 3 rotations converge in the middle of both crystals to minimize parasitic displacements during adjustment*

Monochromator in Details

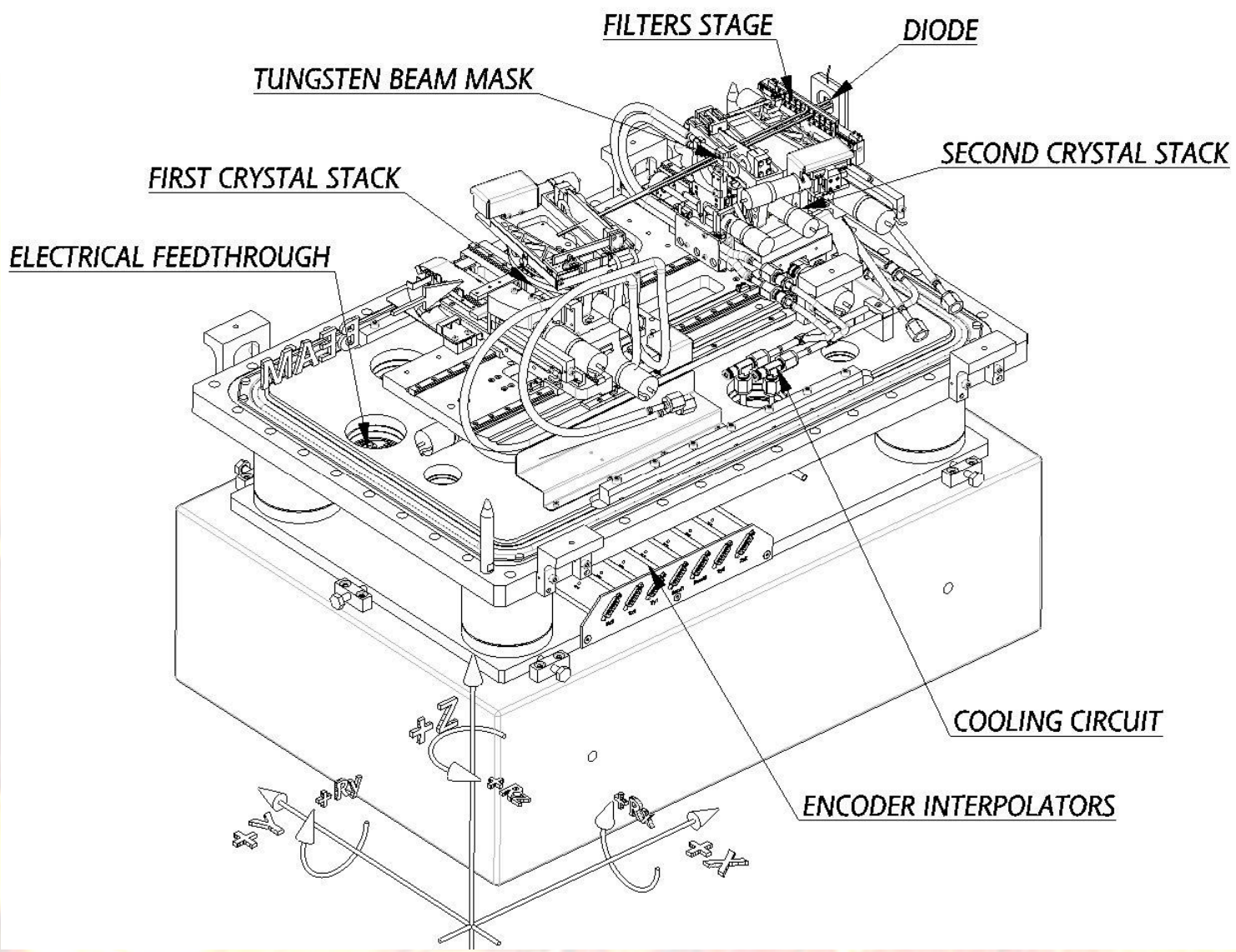

Monochromator Overview

Monochromator in Details

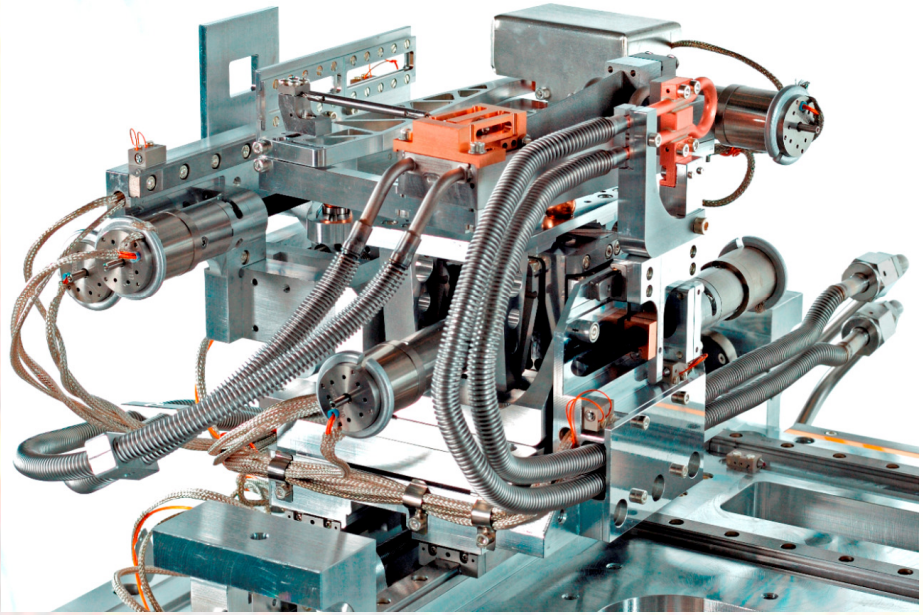

Second Crystal Stack

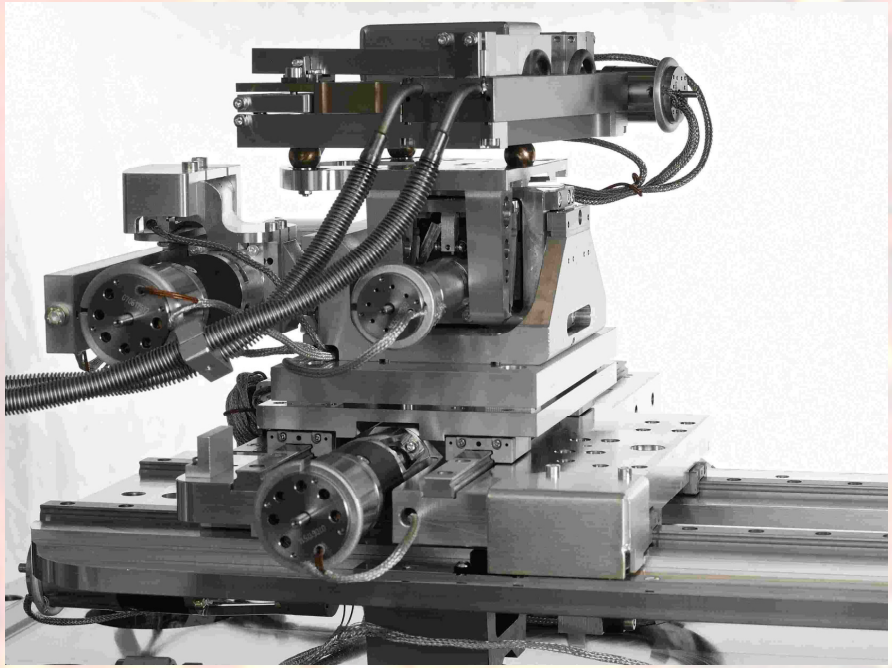

First Crystal Stack

Monochromator in Details

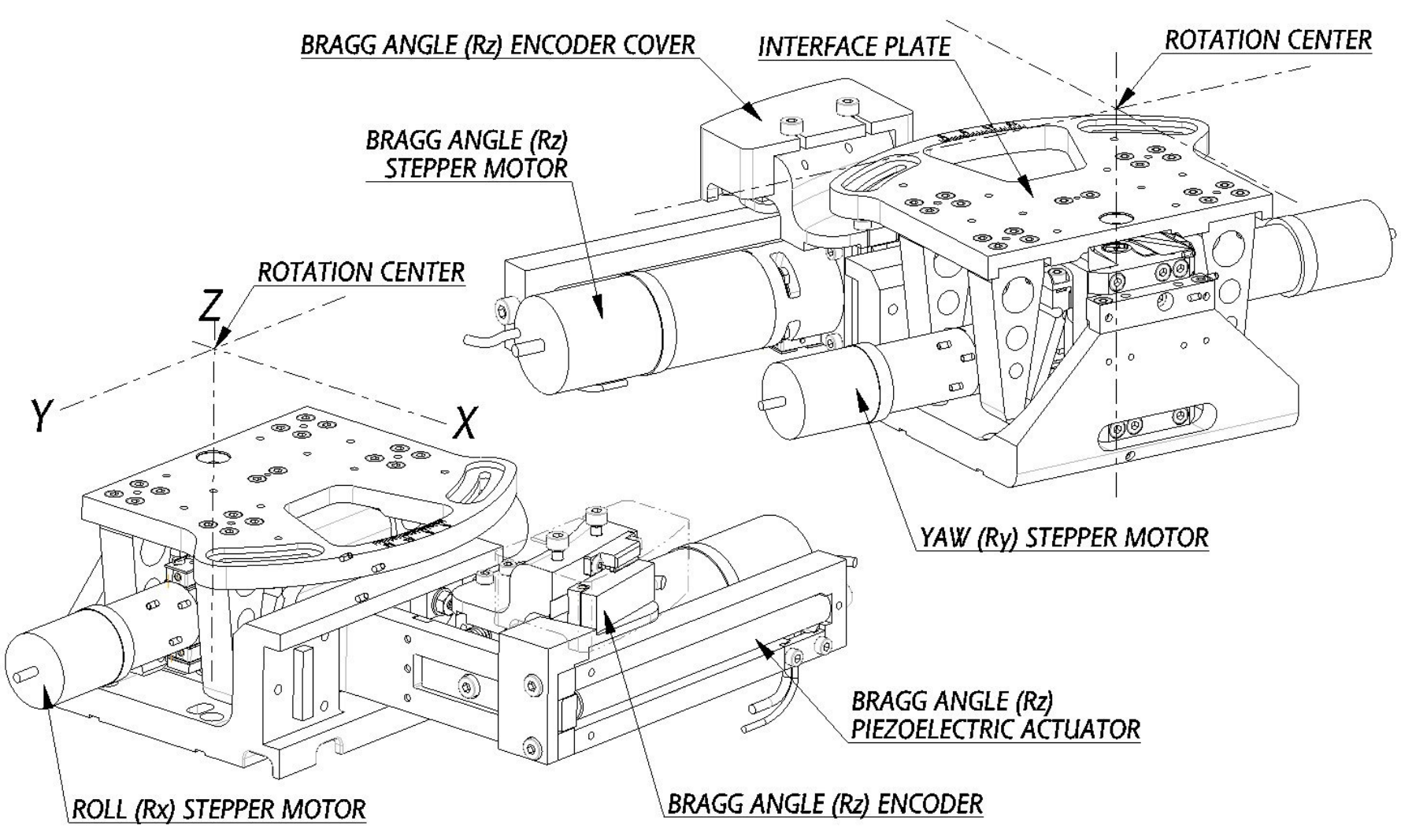

Tip-Tilt-BRAGG-Stack

Monochromator in Details

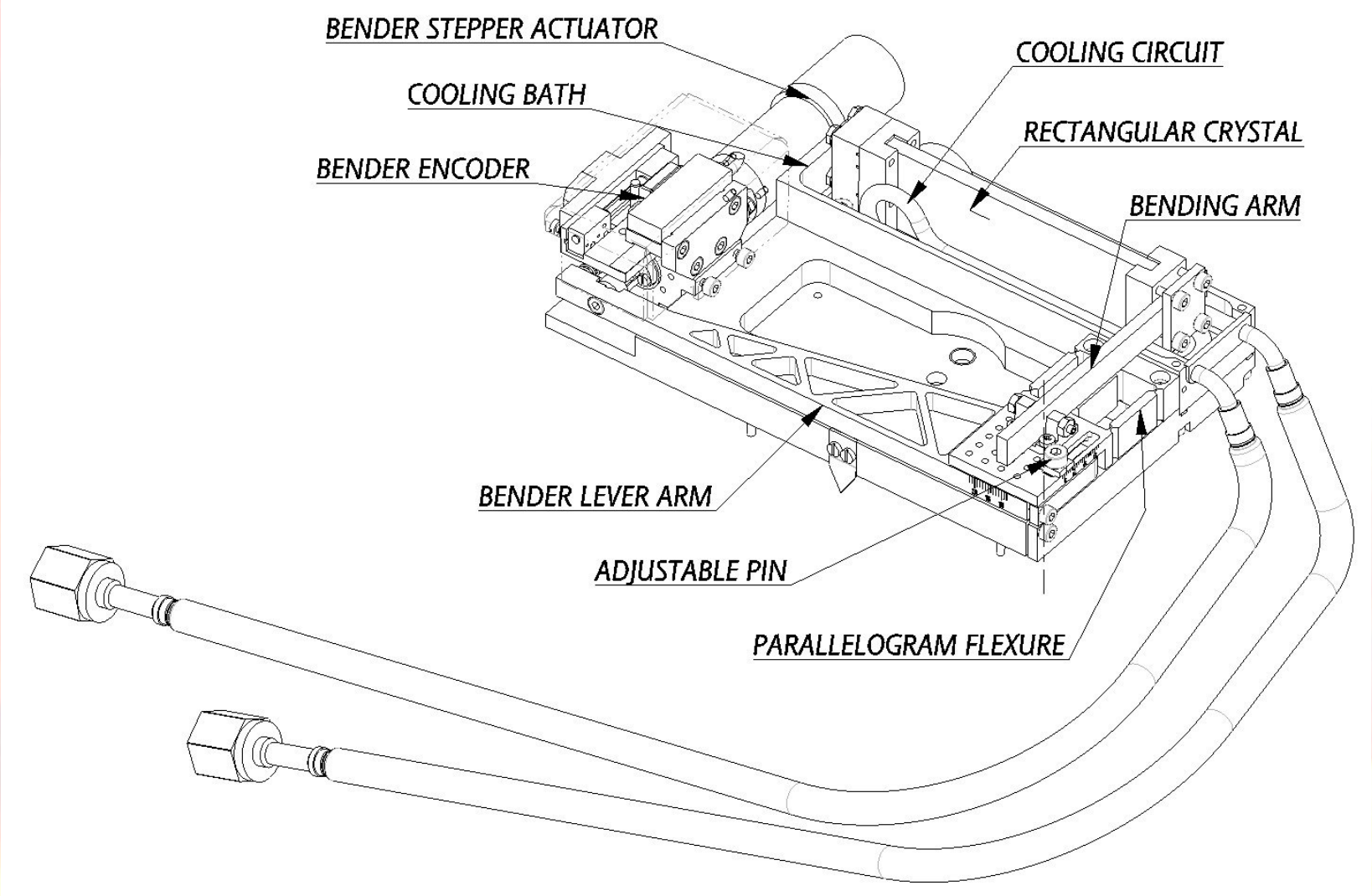

Bender for Rectangular Crystals

Monochromator in Details

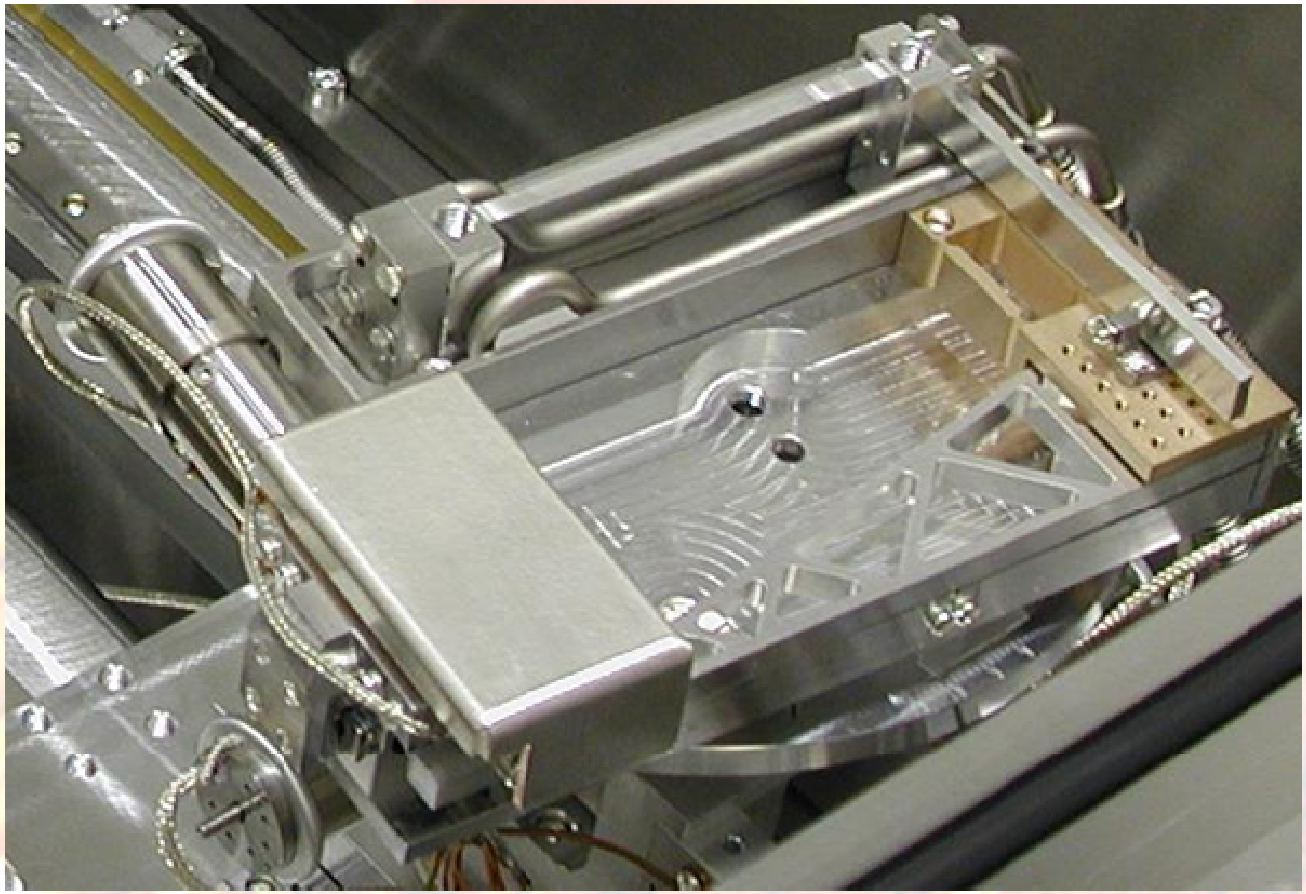

Bender for Rectangular Crystals

Monochromator in Details

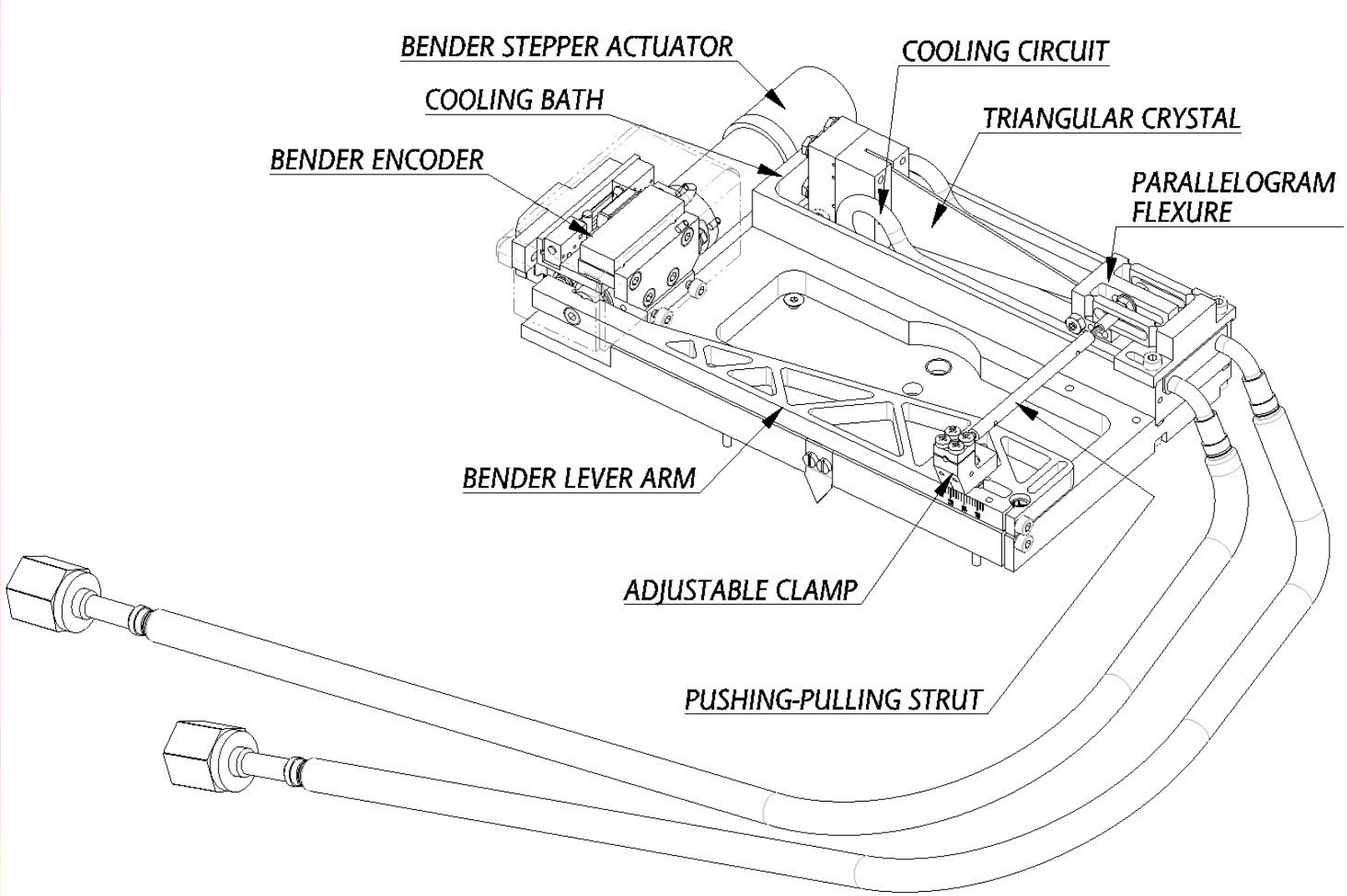

Bender for Triangular Crystals

Monochromator in Details

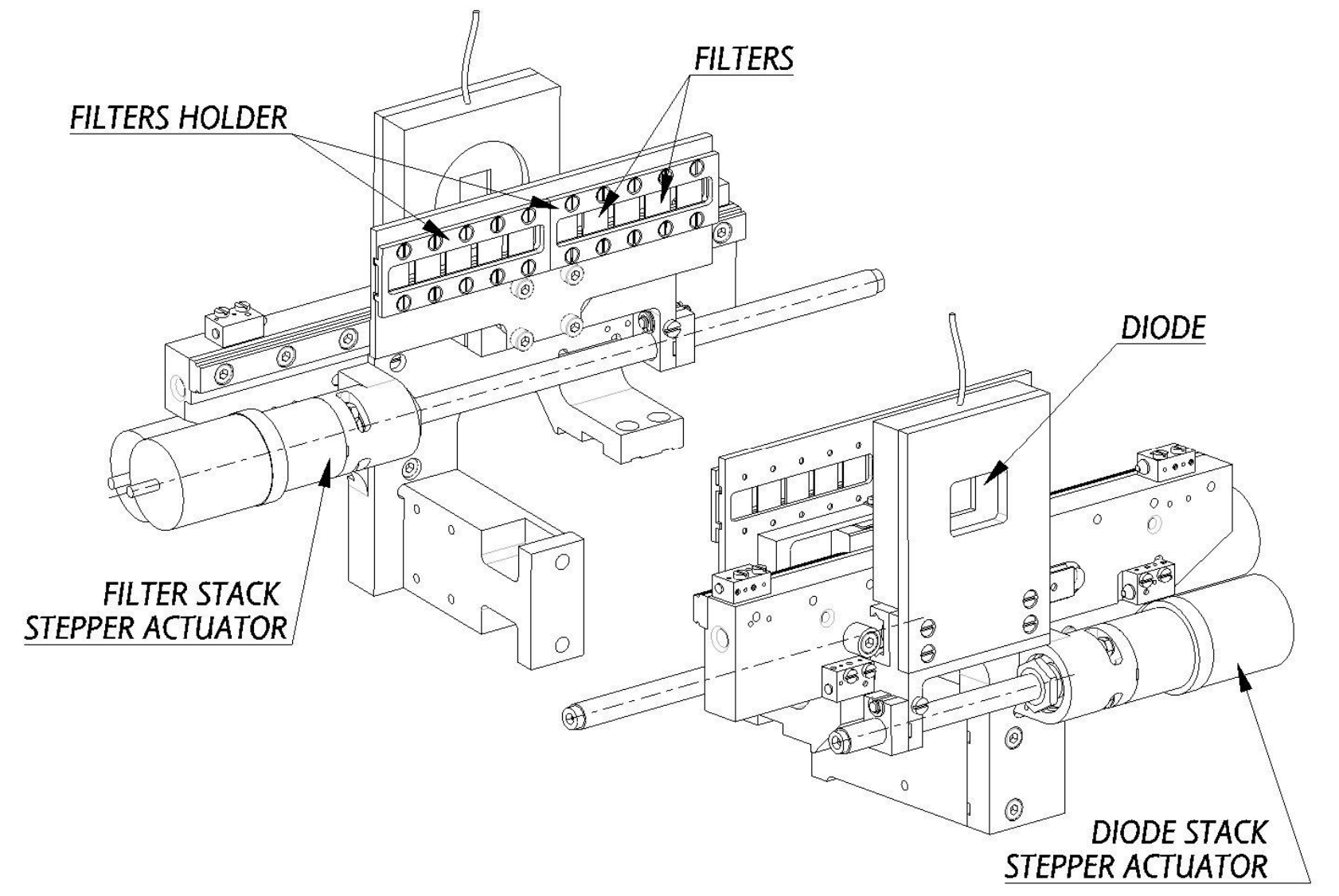

Diode-Filter Assembly

Monochromator in Details

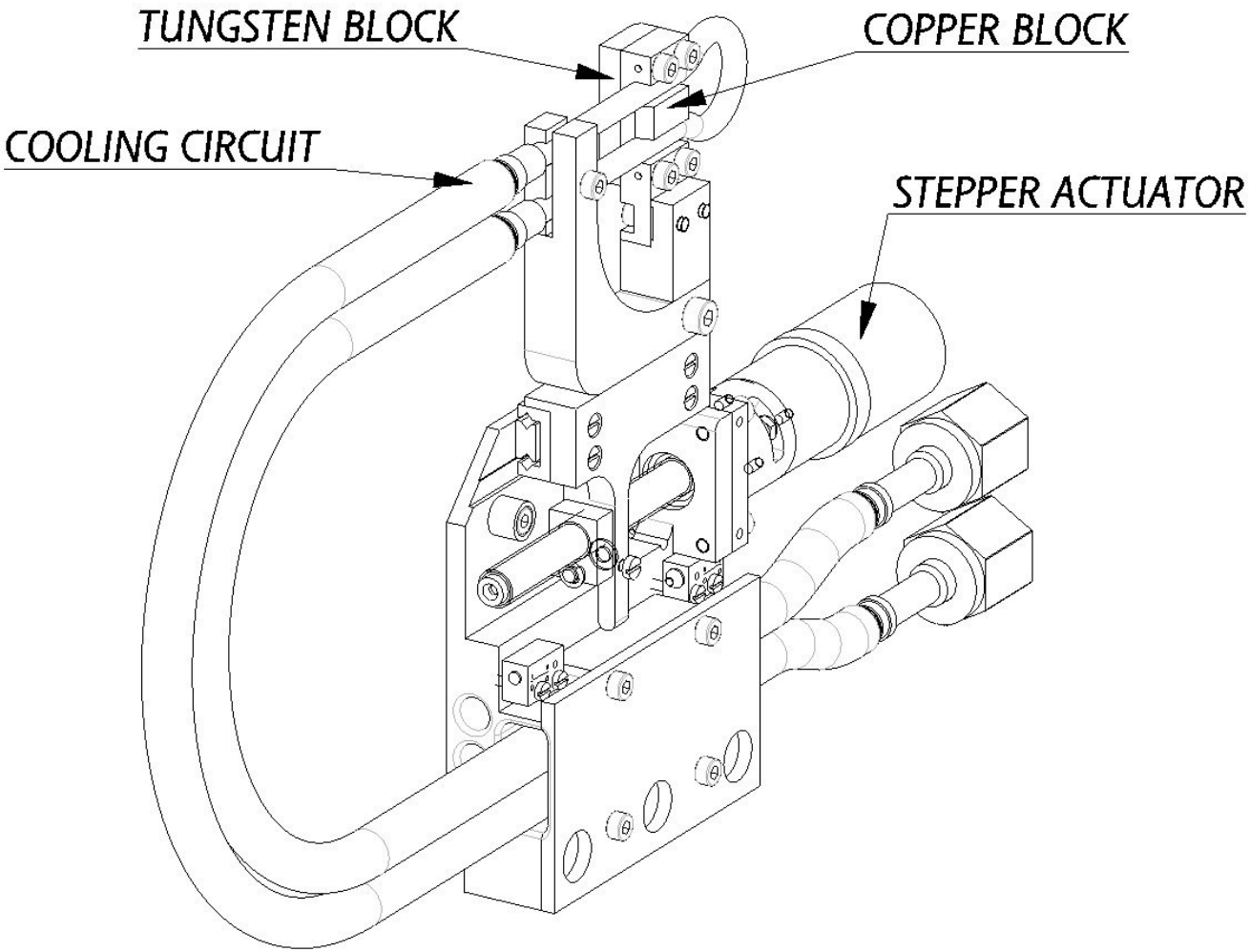

Tungsten Beam Stopper

Monochromator in Details

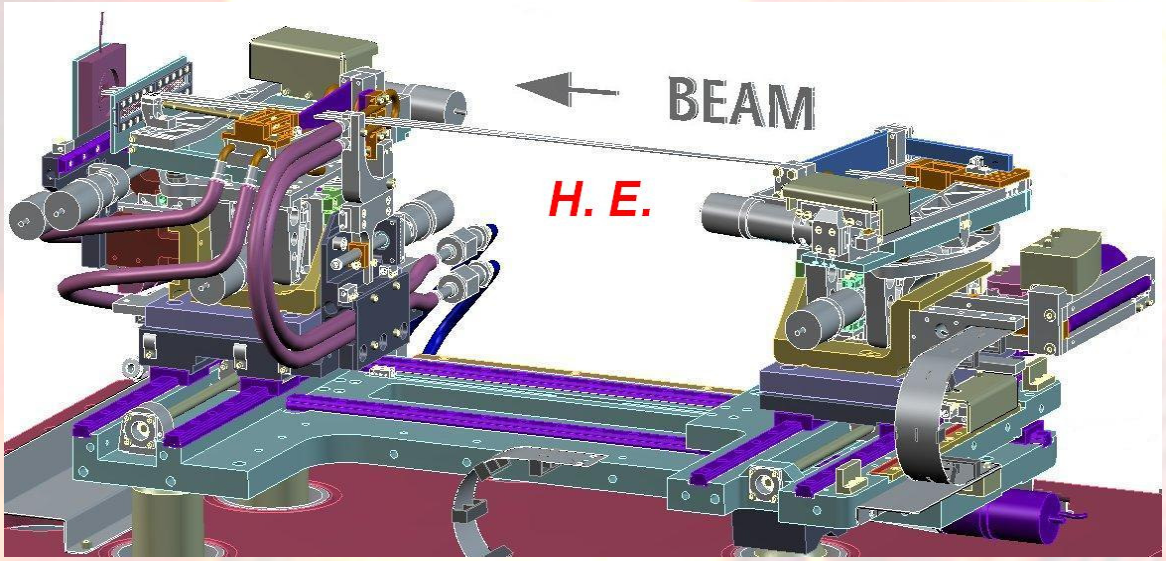

High Energy Configuration

Low Energy Configuration

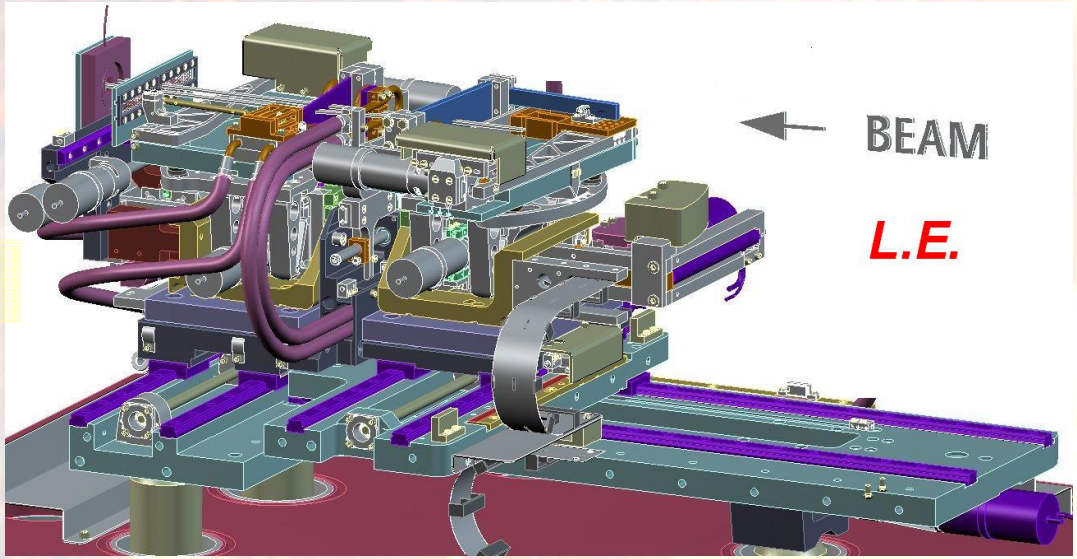

In Factory Test Results

	Angular Range	Des. Mech. Resol.	Meas. Mech. Resol.	Open Looop Rep.	Enc. Resol
Bragg Angle	0.8° ÷ 5°	0.45 μrad	0.36 μrad	3.10 μrad	0.18 μrad
Yaw	± 0.8°	0.43 μrad	1.08 μrad	4.5 μrad	
Roll	± 1.03°	0.08 μrad	1.45 μrad	3.6 μrad	

Preliminary Results

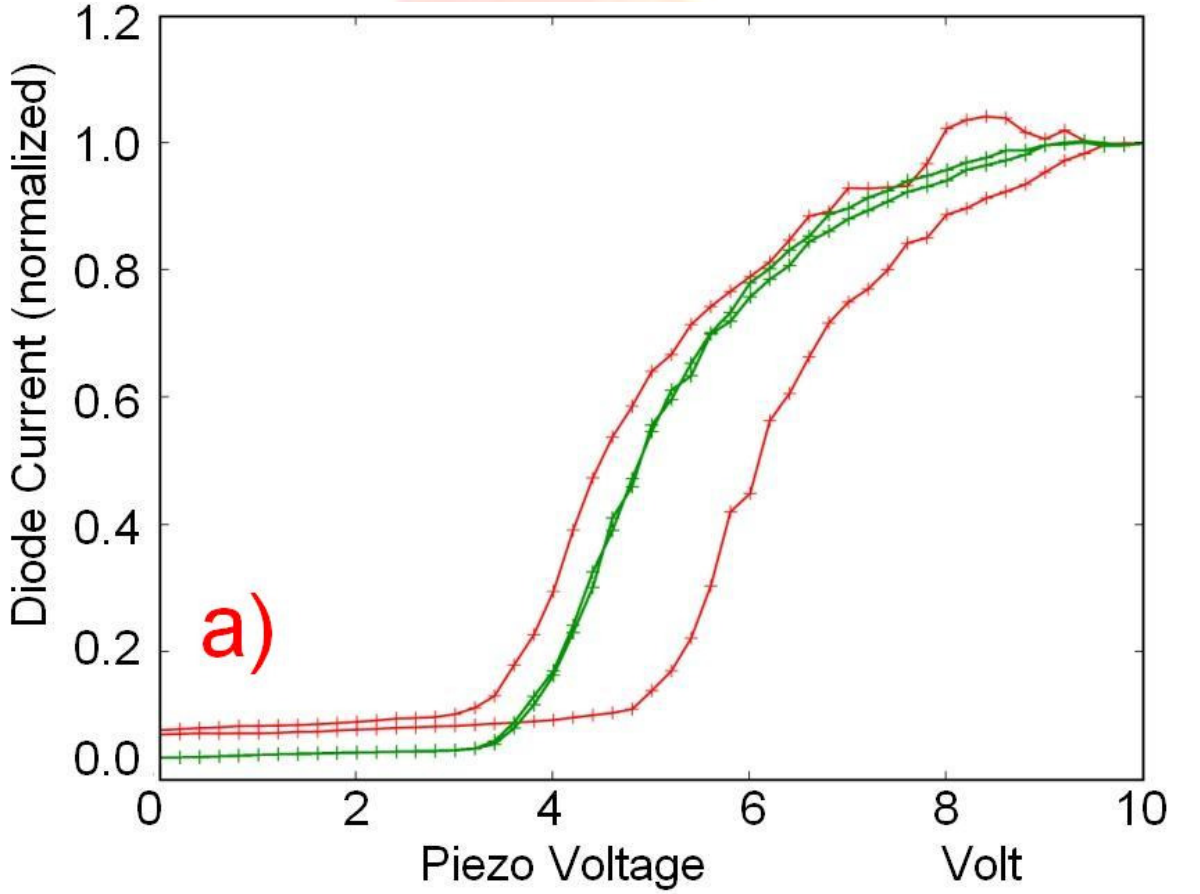

Measurements of the Tin absorption edge using the foils and diode mounted inside the monochromator vacuum chamber. Red traces: measurements taken at 2 different positions on the flat first crystal (+/- 1 mm away from the centre of the radiation fan); the green traces are the same scans after optimization of the bending

Preliminary Results

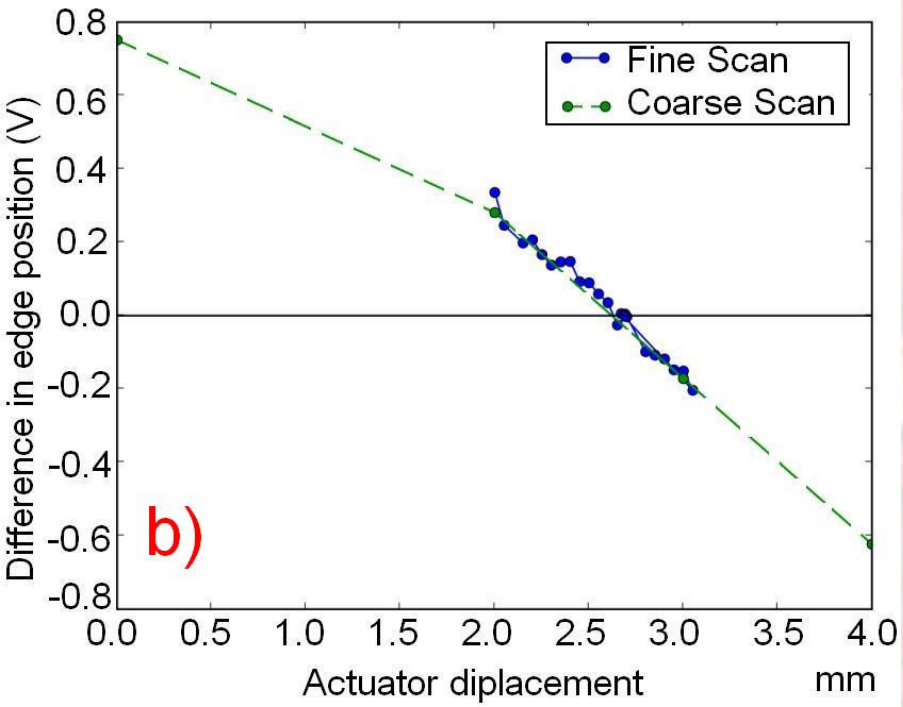

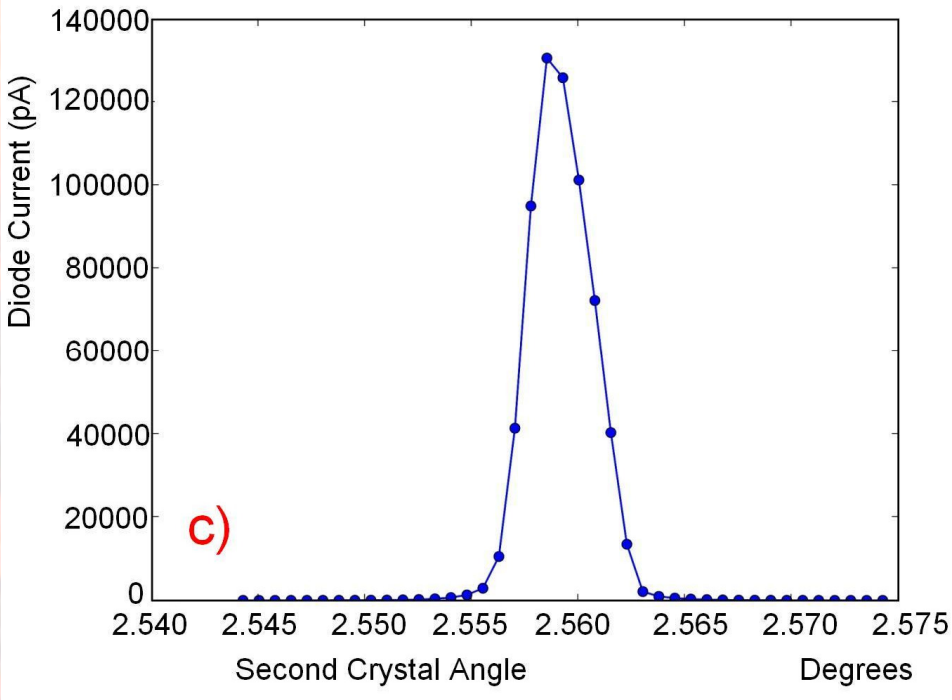

b) Optimization of the first crystal bending at Tin edge

c) Rocking curve measured at 44.3 keV

Conclusions

- *Monochromator has been foreseen as a "test facility". Many "knobs" are available*
- *In factory tests fulfil the requirements*
- *Preliminary (on beam) results: high reliability, good stability, fast optimization and commissioning*

Thank You for Your Attention