Vacuum Chamber Design of NSLS II storage ring

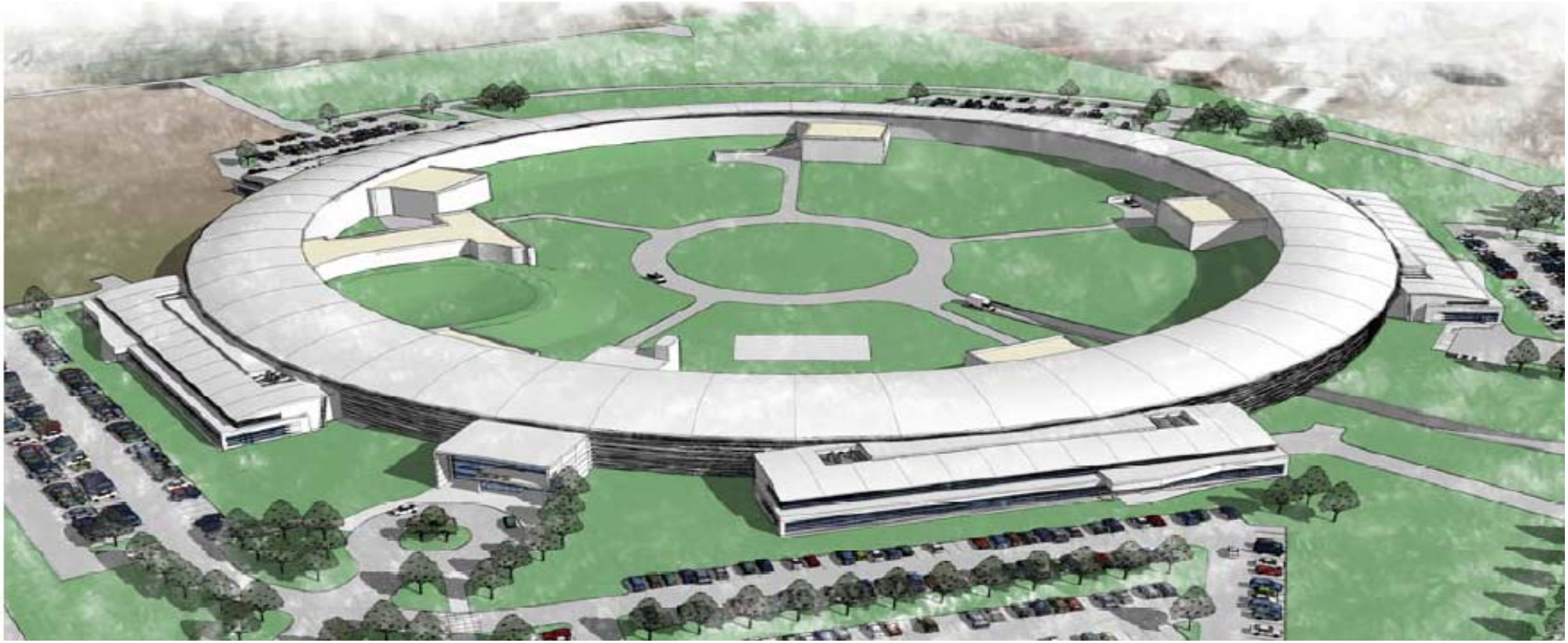

L. Doom, M. Ferreira, H.C. Hseuh, F. Lincoln,

C. Longo, V. Ravindranath, S. Sharma

Brookhaven National Laboratory

Office of Science
U.S. DEPARTMENT OF ENERGY

BROOKHAVEN NATIONAL LABORATORY
BROOKHAVEN SCIENCE ASSOCIATES

Outline

NSLS-II Project parameters and ID

Vacuum Design Options and Requirement

Storage Ring DBA Cell Layout and Chamber Design

- Chamber profiles
- Fabrication and testing of prototype cell chambers
- Absorbers
- BPM buttons
- Chamber bake-out process,
- RF shielded bellows
- NEG strip supports,

Summary

NSLS-II Accelerator Parameter

Ferdinand Willeke

Storage Ring

- 3 GeV ± 0.1%,
- 500 mA ± 1%, top-off injection
- Circumference 792 m
- 30 DBA cells
  - 15 x 9.3 m + 15 x 6.6 m

Novel design features:

- damping wigglers, 2x3.5m x 8
- soft bend magnets, 0.4 T
- 17 TPW
- 3 x 90 mm dipoles for Far IR

Ultra-low emittance

- e_x, e_y = 0.6, 0.008 nm-rad
- rms beam size = 3 μm, ± 10%

Bunch Length (rms) ~ 10 psec

- 1.2 nC per bunch

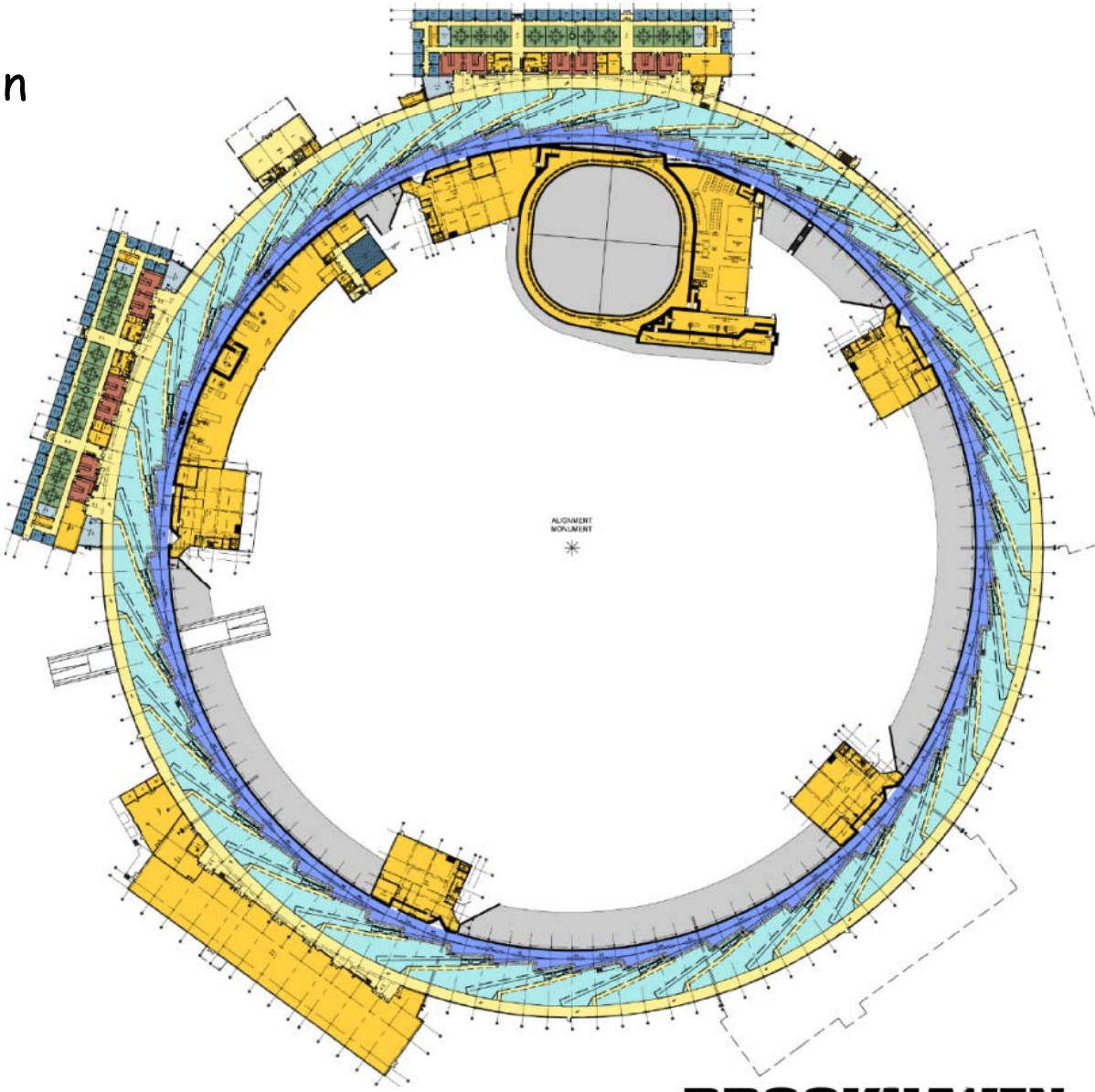

Vacuum Design Choices

Depend on machine parameters, designers and their experience!

	Aluminum chambers	Stainless chambers
EU	PETRA III	BESSY II, DIAMOND, ELLETRA, ESRF, SLS, SOLEIL, ANKA, CANDLE, ALBA, SESAME
Amer	ALS, APS, NSLS, **NSLS-II**	CLS, LNLS, SPEAR-3 (Cu)
Asia	SPring-8, PF, TLS, TPS	ASP, SSRF

NSLS-II

Low dipole field of 0.4 T
(ρ = 25 m)
⇨ narrow BM photon fan
⇨ narrow chambers
⇨ extrusion possible

Chamber - Al extrusion with A6063-T5 alloy

Experience at APS, Cost of fabrication

Smooth cross section, good thermal conductivity

Impedance, ease of in-situ bake

Discrete absorbers over distributed absorbers

Due to low power density from BM fan

⇨ better chamber and BPM thermal stability

UHV pumps - NEG strips in ante-chambers

IP and TSP (and NEG cartridge) at absorbers

NSLS-II Vacuum Requirement

Vacuum Chambers - Adequate Apertures and Low Impedance

- Beam aperture – 25 mm (V) x 76 mm (H)
- Chamber extrusion straightness - < 1 mm / 5 m
- Smooth cross section changes with tapers: 10:1 ratio
- Minimum steps or cavities < 1 mm
- BPM alignment to ± 30 μm

P(avg) < 1 nTorr (> 50% H_2, < 50% CO, CO_2, CH_4, …)

- τ (beam-gas) > 40 hr (inelastic scattering)
- Local pressure bumps ⇨ bremsstrahlung radiation and shielding
- Fast conditioning after intervention
  - In-situ bakeable
  - η (PSD) < 1 x10^{-5} molecules/*hν* after 100 A.hr

Cell Vacuum Chamber Layout

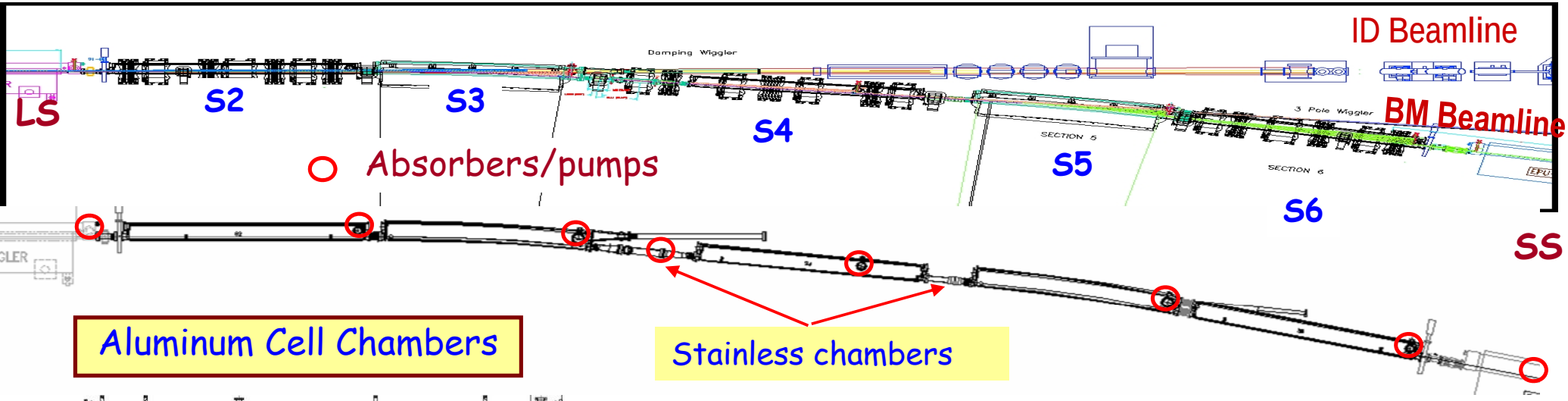

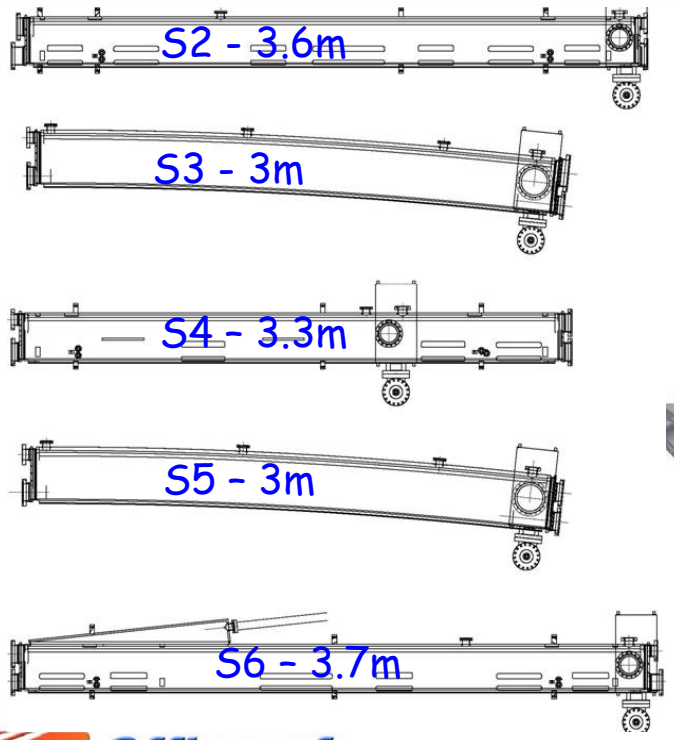

Dipole chamber, 6° bend

Multipole chamber

Cell Chamber Cross Sections and FE Analysis

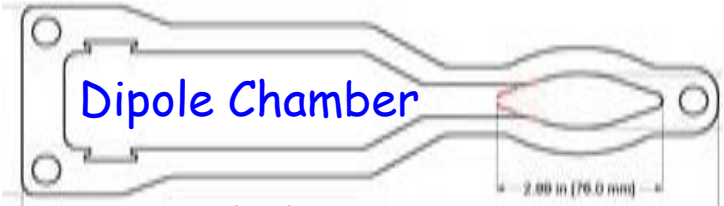

Extruded cross section

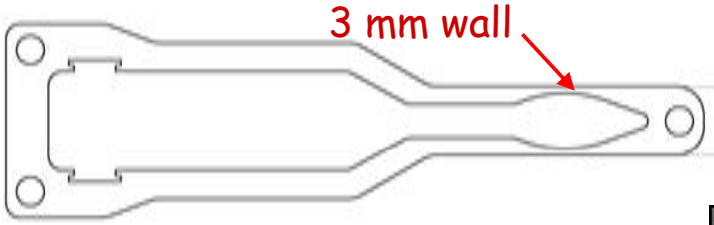

After bending and machining

Maxi. δ = 0.3 mm x2
Max. S = 42 MPa

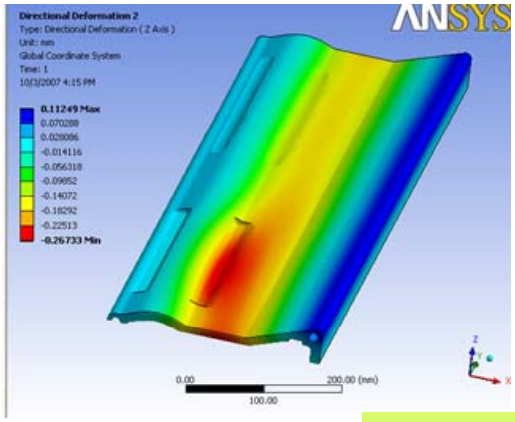

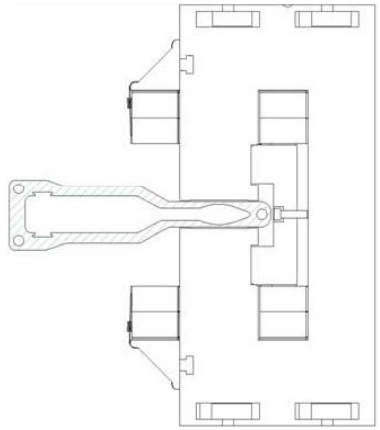

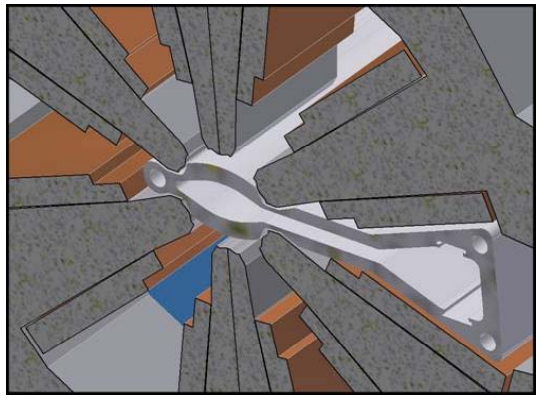

Maxi. δ = 0.27 mm x2
Max. S = 64 MPa

S_{yield} (A6063T5) = 145 MPa
S_{stress} (A6063T5) = 186 MPa

Multipole Chamber

Extruded cross section

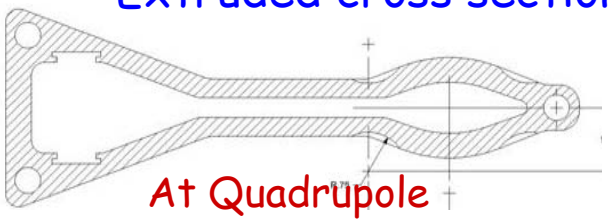

At Quadrupole

Machined at pole locations

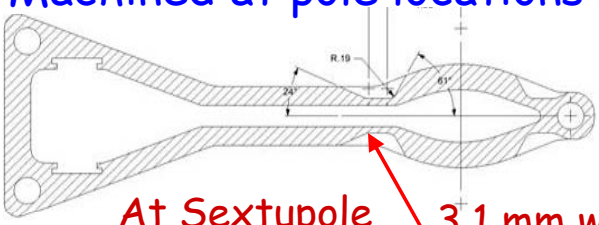

At Sextupole

3.1 mm wall

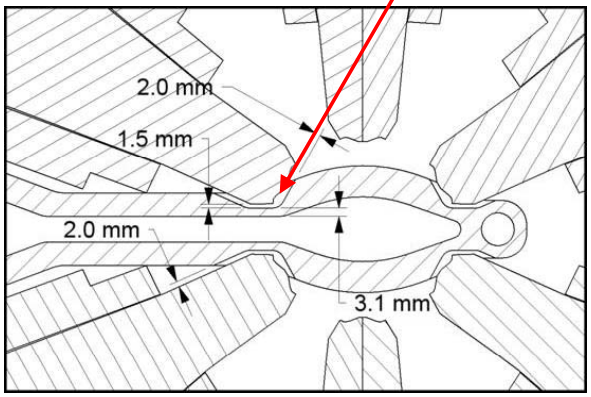

Chamber Fabrication Details`

Multipole Chamber Extrusion

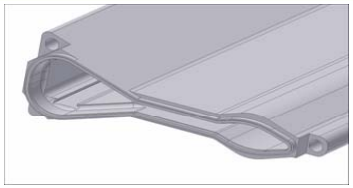

w/ > 5 mm welding zone

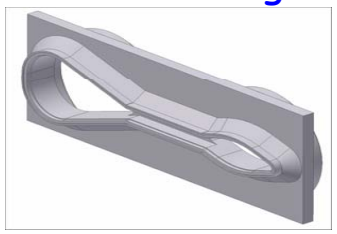

End flange

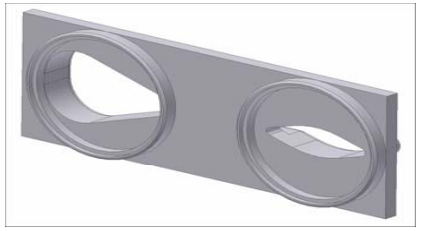

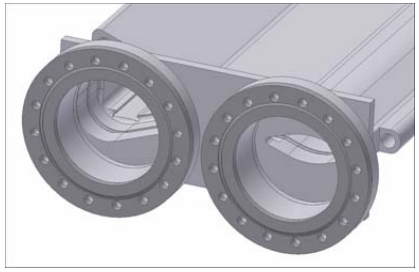

End assembly w/ CF flanges

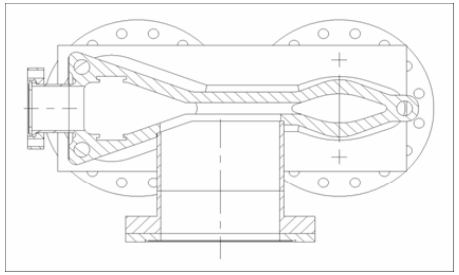

Absorber / pump ports

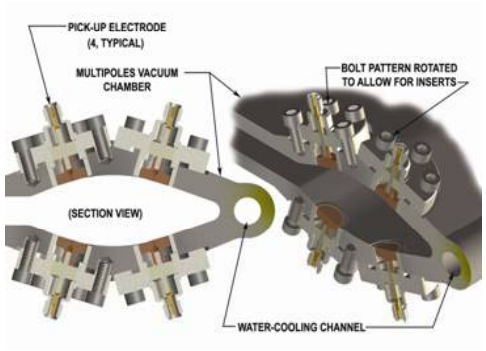

APS chambers for evaluation

NEG supports, bakeout, BPM…

Prototype Cell Chambers

Goal: Prototype S6 + S5 chambers by Sept

S6: Extrusion, machining, cleaning & welding (by APS)

S5: Extrusion, bending, machining, …

Extrusion by Taber

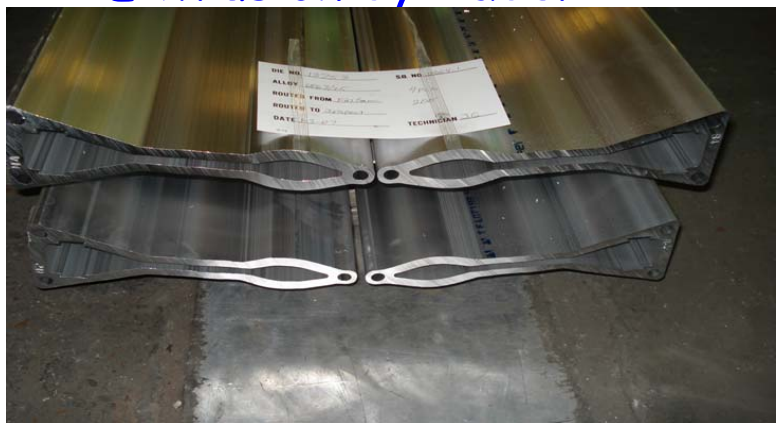

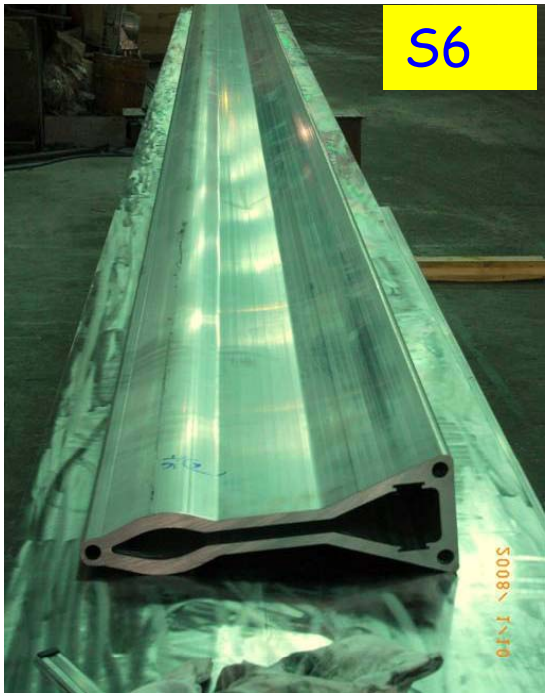

Extrusion by Tai Lain

Chamber Extrusion and Fabrication

L. Doom, F. Lincoln

- Extrusions with both vendors are almost complete
  - 2 dipole + 2 multipole are in house, balance is on route
  - > 50% do not meet some of the specifications
- Machining and welding development started
  - CS is machining short multipole sections and end flanges
  - Weld development (by APS) using short sections
  - Machine full length S4 sections - by CS and by vendor
  - Weld and certify completed S4 chambers (by APS)

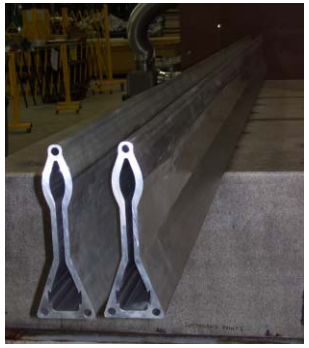

Life is more challenging with Central Shop involved!!

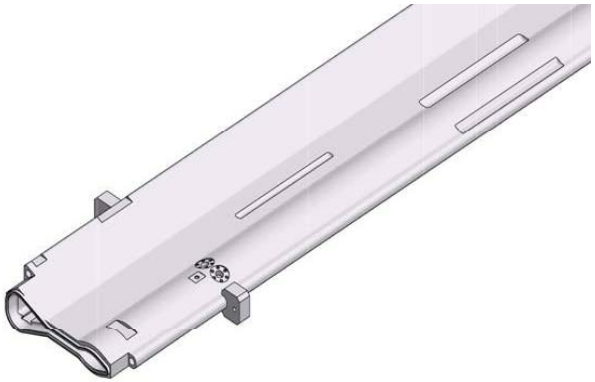

Ray Tracing of Photon Fans

Use Ray Tracing to define photon fans and absorber locations

- ⇨ To ensure adequate apertures for photon fans
- ⇨ To protect un-cooled flanges and bellows
- ⇨ To trim DW fans by wiggler absorbers prior to FE
- ⇨ To estimate power, power density, ΔT for absorbers and P profile

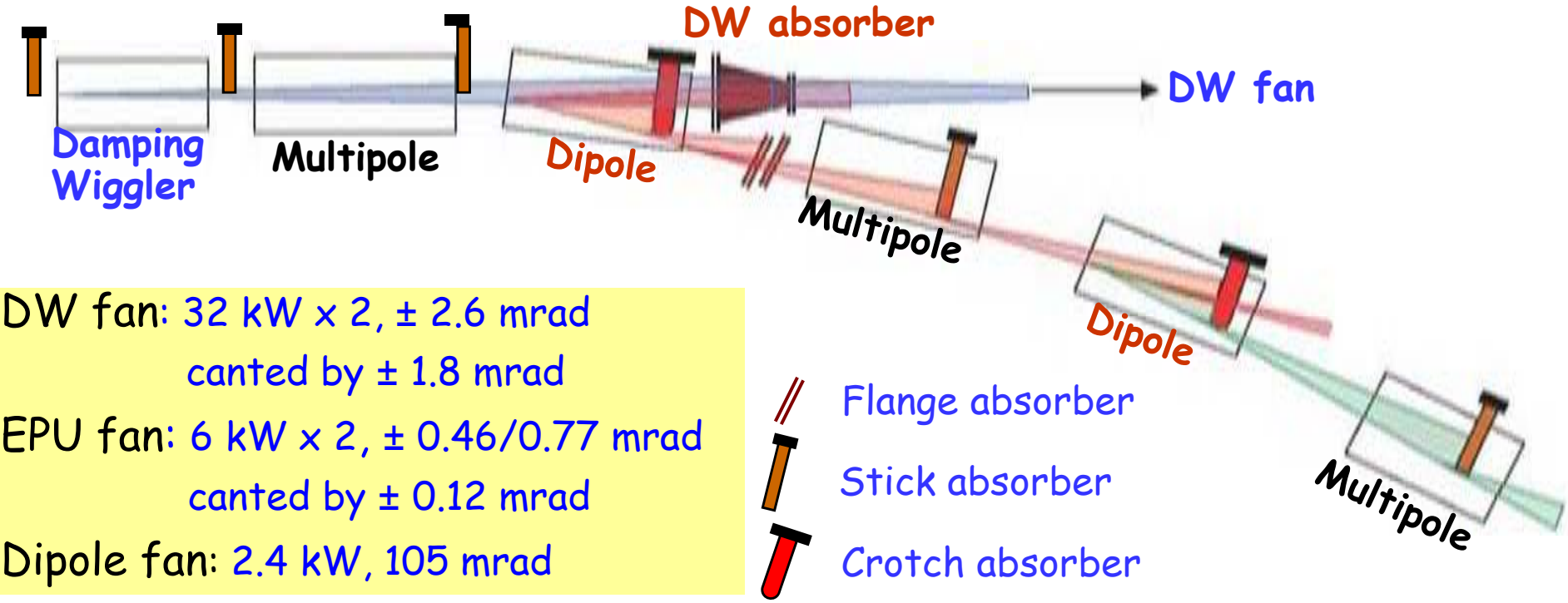

DW fan: 32 kW x 2, ± 2.6 mrad
canted by ± 1.8 mrad

EPU fan: 6 kW x 2, ± 0.46/0.77 mrad
canted by ± 0.12 mrad

Dipole fan: 2.4 kW, 105 mrad

BM and DW Photon Fans at S2-S4 Region

C. Longo, M. Ferreira

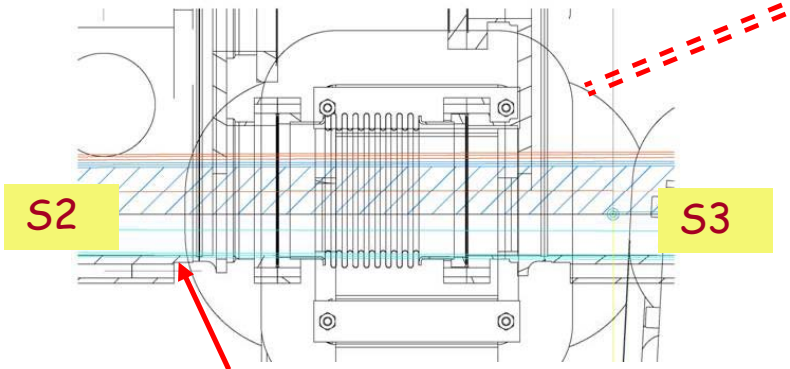

DW fan hits inward S2 chamber
(or max. canting ~3 mr)

DW ABS
~ 15 kW

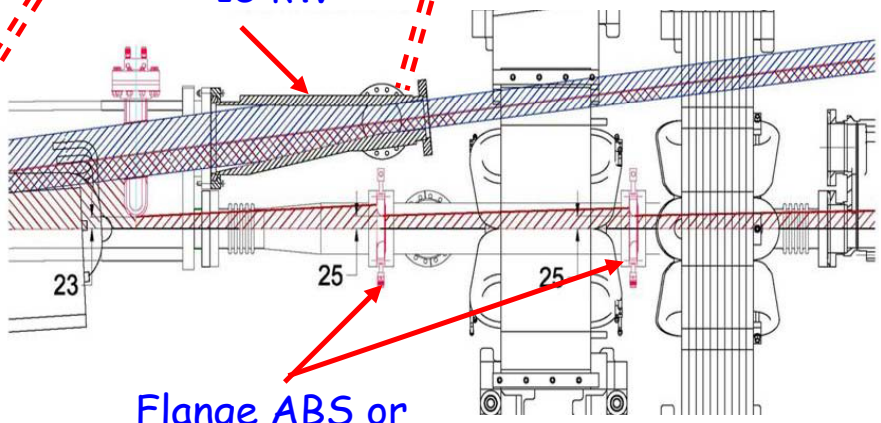

Flange ABS or
Distributed ABS

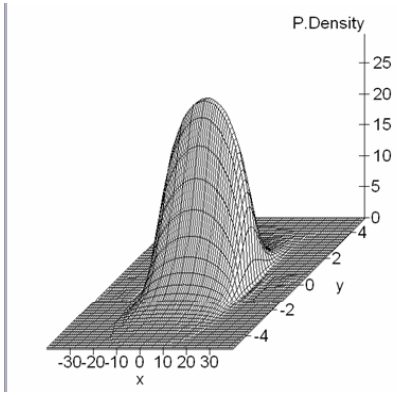

Vertical DW fan profile
at S3 exit channel

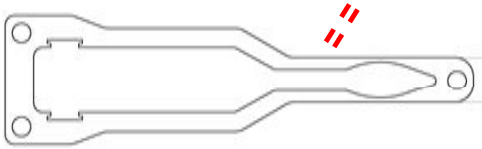

Top/bottom wall		P(W)
BM	S3,S6	~5
DW	S1	~ 70
	S3	< 1,000
EPU	S1	TBD
	S3	TBD

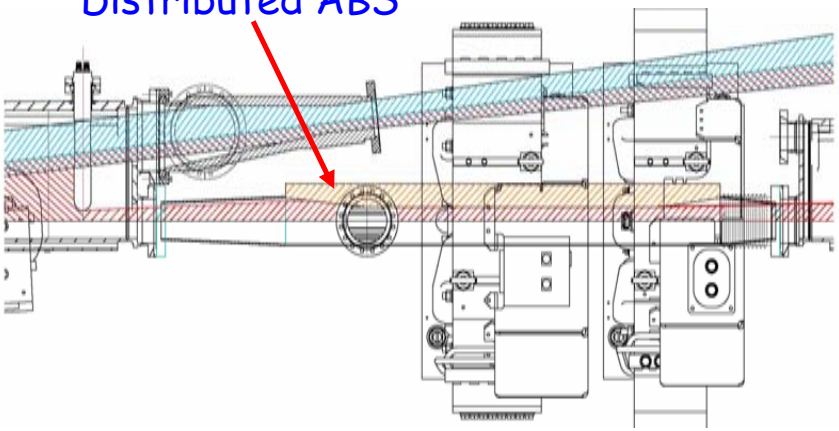

Photon Absorbers

2 crotch, 5 stick and 2 flange absorbers per cell (26.4 m)

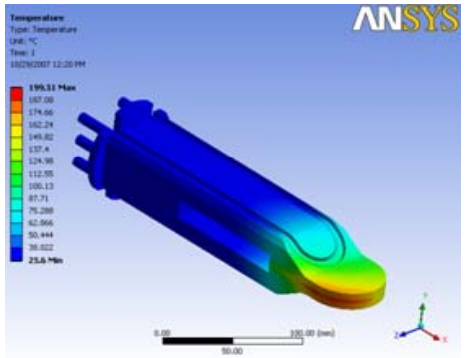

< 12 W/mm², T_{max} ~ 200°C

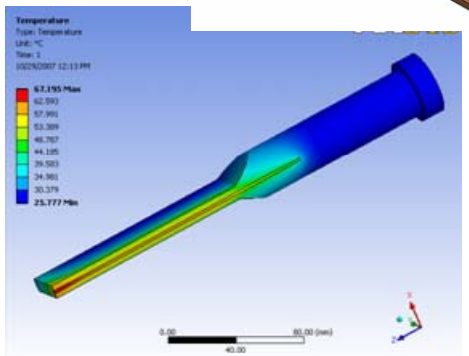

< 3 W/mm², T_{max} ~ 68°C

	GlidCop	Cu (OFHC)
S_{yield} (MPa)	350	76
T_{max} (°C)	< 400	< 250

Section #	Absorber Type	X (mm)	Power (watt)	# hv
S1-SS	Stick	22	34	2.9E+17
	Stick	32	46	3.9E+17
S2	Stick	25	37	3.1E+17
S3	Crotch	23	1346	1.1E+19
S4	Flange	25	340	2.9E+18
	Flange	25	220	1.9E+18
S4	Stick	27	264	2.2E+18
S5	Crotch	25	1444	1.2E+19
S6	Stick	25	799	6.8E+18

Damping Wiggler Absorber

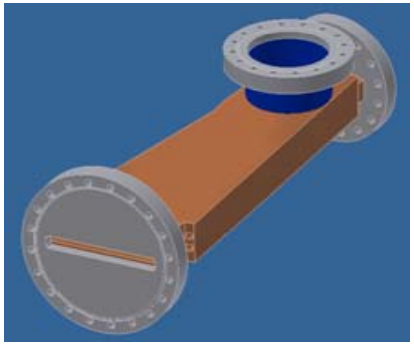

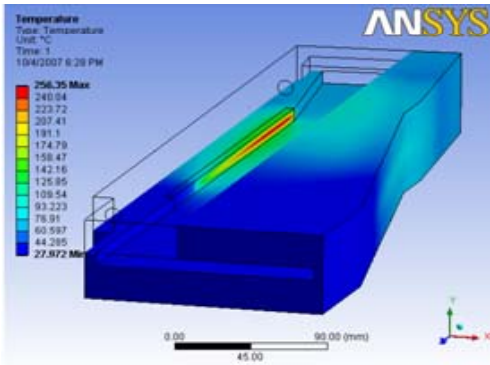

P (kW) absorber	22
P_{max} (W/mm²)	**25**
S_{max} (MPa)	303
T_{max} (°C)	**256**

Mounting of BPM Buttons/Flanges

C. Longo, P. Cameron

Optimum: ~10mm buttons, ~ 15mm apart
Flanged w/ Helicoflex seals

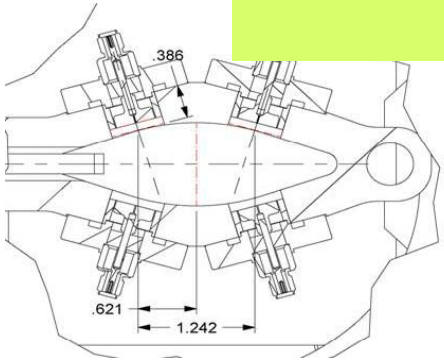

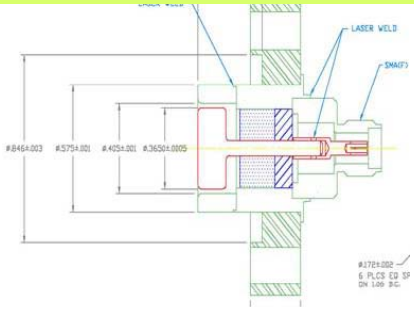

ERL BPM

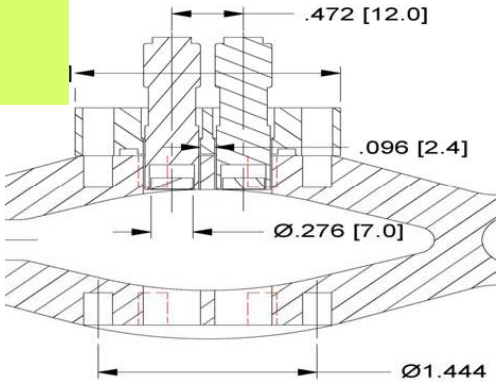

10mm button, 32 mm apart
w/ ERL button/flange

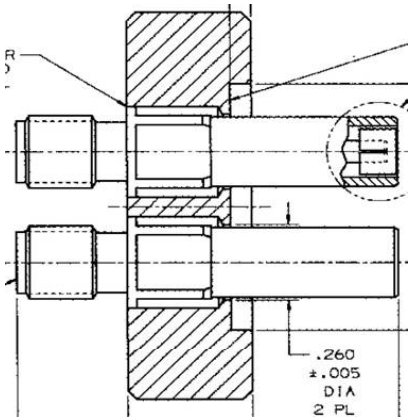

Two buttons on 54 mm flange
Need **>12mm** wall for bolts

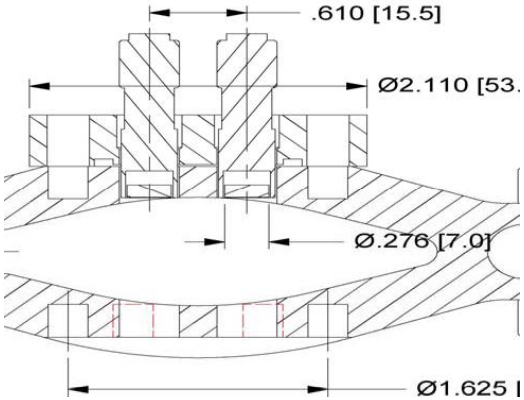

APS 4mm buttons for ID

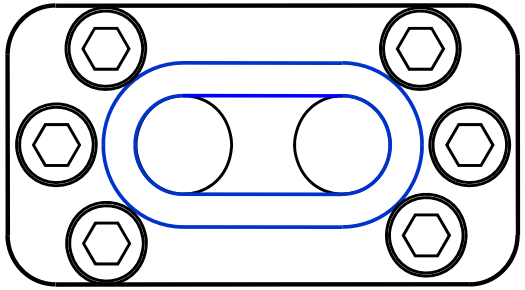

7mm buttons 12 mm apart
w/ one custom flange

Modify cross section
w/ thicker wall?

Rectangular flange
Sealing reliability?

Baking procedure for vacuum chambers

Thermal isolation
Difficult to exchange heat with sorounding
Al foil + kapton

Kapton tape heater

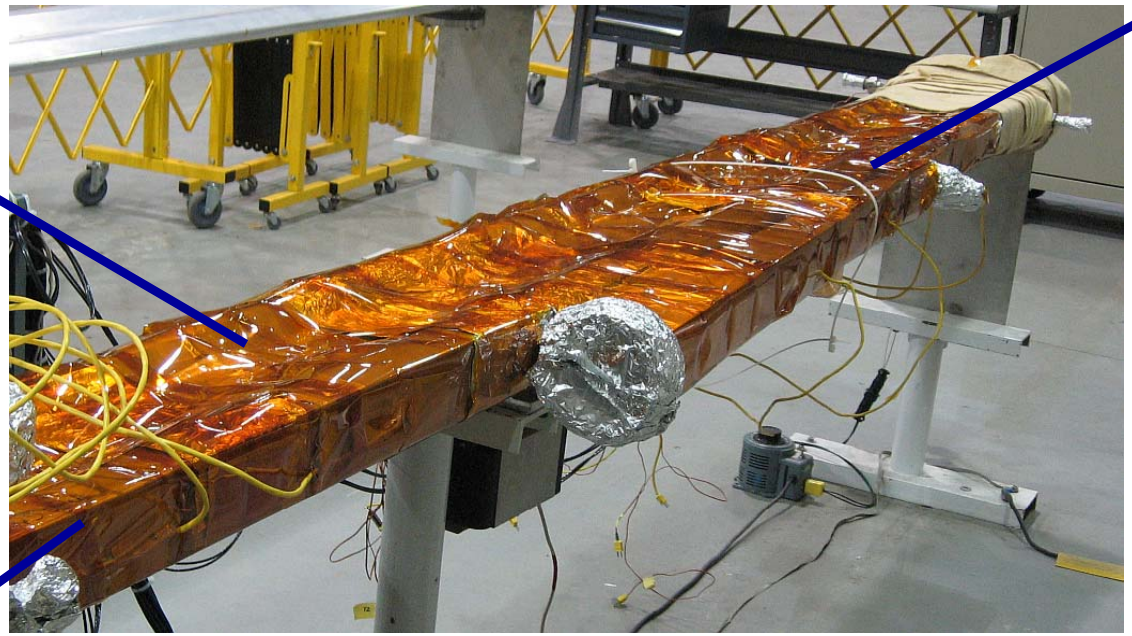

Use most part of the free surface of the chamber (no magnets) with Kapton heater tapes (low power density):

Advantage: faster heating, good thermal distribution, easy to handel, no NEG risk, less heat to magnet during baking, less power for baking.
Disadvantage: Some effort for installation, almost no space (less thicknes means less thermal isolation), not inexpensive, chamber less sensitive tunel temperature during operation because of thermal isolation.

RF shielded bellows

Energy [GeV]	3
Current [C/s], [A]	0.50
num. Bunchs	1320
num. Bunchs 80% fill	1056
circunference [m]	792.0
Bunch length [s]	1.5E-11
Total eletrical charge [C]	1.3E-06
Charge per bunch [C]	1.3E-09
Max. Bunch current [C/s], [A]	5.0E-03
Max. Charge per bunch [C]	1.3E-08
Instantaneous current [C/s], [A]	527

Fingers outside (few fingers): 3D model for impedace simulation (loss factor aprox. 1.0E-2 V/pc)

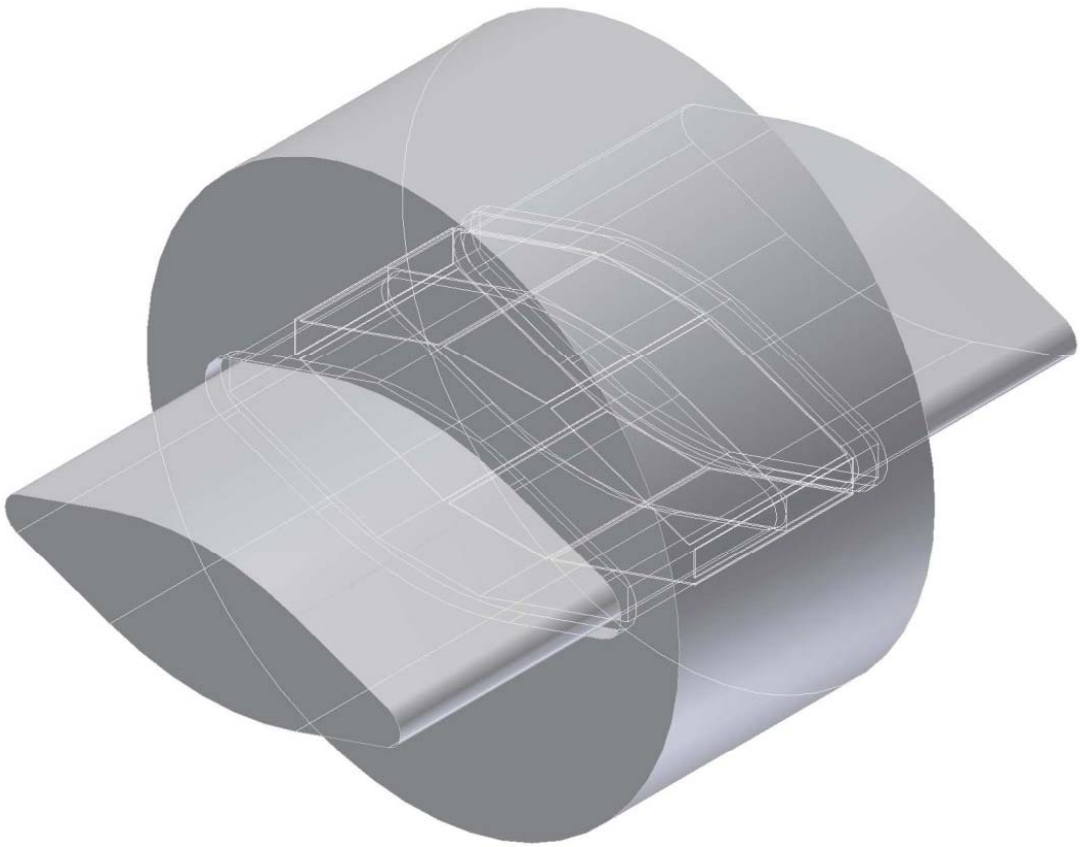

Mechanical specifications

-Total length for design (minimum): 130 mm
-Maximum mismatch alignment: 2 mm
-Maximum angle deviation : 15 mrad
-Maximum compression: 25 mm

Project specification

- low dust generation
- excellent finger electrical contact
- no modes of resonance with the machine
- good vacuum performance (low thermal desorption)

NEG strip supports

L. Doom, K. Wilson

Riveted mounting every 10cm, with alumina insulators

Prototype to be tested on APS chambers for reliability and flexibility

Bakeout, ozone cleaning and NEG support development using APS chambers

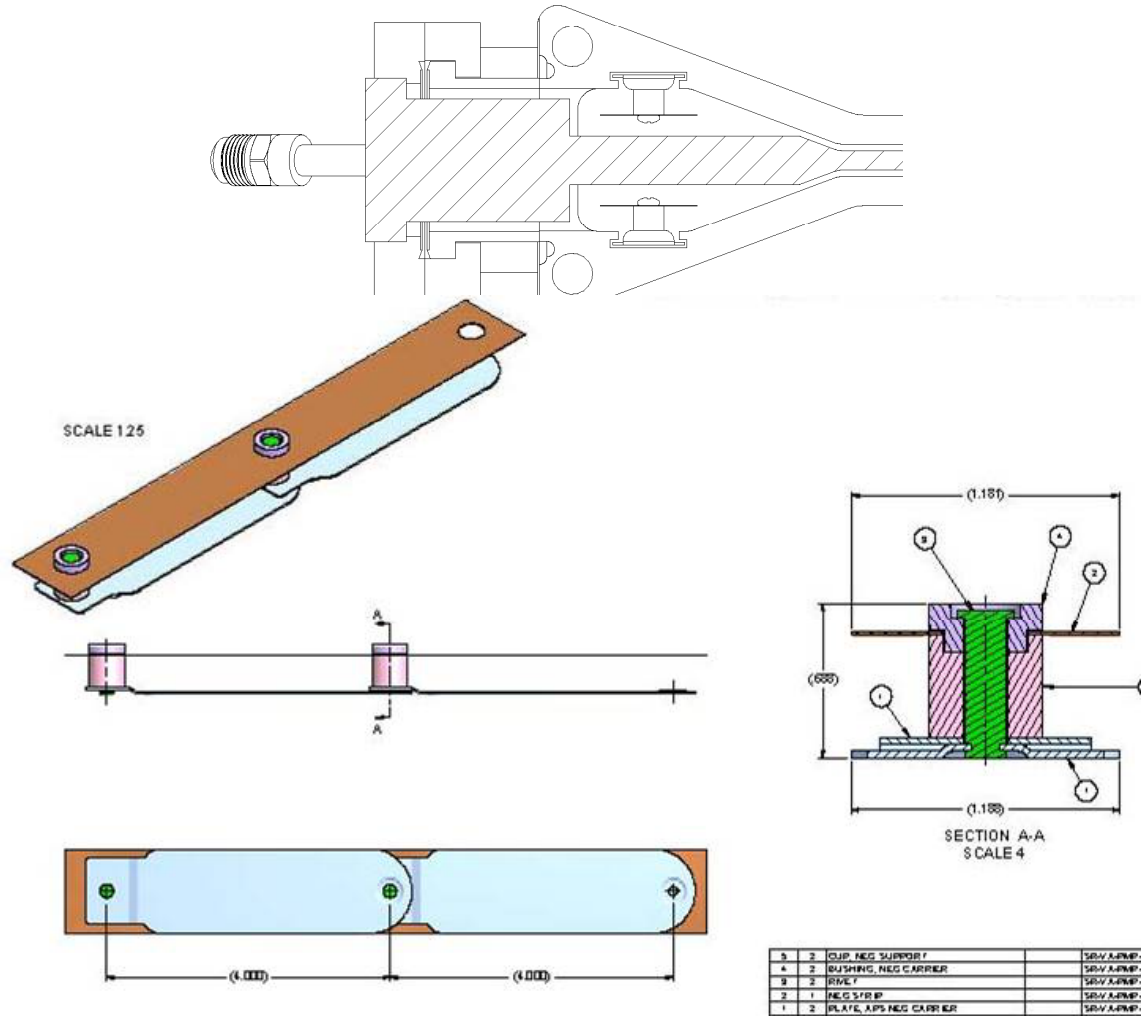

Summary

- Vacuum chamber status
  - Detailed chamber design underway
  - Test chamber extrusions with two vendors: Tai Lain and Taber
  - Prototype chamber fabrication by Sept
  - Vertical fan details underway (DW and undulator)
  - Design of absorbers
  - Design of BPM underway
  - Tape heaters tested as chambers bakeout
  - Design RF shielded bellows
  - Testing NEG supports

*Work performed under auspices of the United States Department of Energy, under contract DE-AC02 98CH10886