Diamond Light Source Proceedings
http://journals.cambridge.org/DLS

Additional services for *Diamond Light Source Proceedings:*

Email alerts: Click here
Subscriptions: Click here
Commercial reprints: Click here
Terms of use : Click here

New optical mount design for Canadian Light Source far infrared beamline

T. May, S. Chen, D. Beauregard, D. Taylor and T. Johnson

Diamond Light Source Proceedings / Volume 1 / Issue MEDSI-6 / October 2011 / e45
DOI: 10.1017/S2044820110000778, Published online: 15 December 2010

Link to this article: http://journals.cambridge.org/abstract_S2044820110000778

How to cite this article:
T. May, S. Chen, D. Beauregard, D. Taylor and T. Johnson (2011). New optical mount design for Canadian Light Source far infrared beamline. Diamond Light Source Proceedings, 1, e45 doi:10.1017/S2044820110000778

Request Permissions : Click here

CAMBRIDGE JOURNALS

Downloaded from http://journals.cambridge.org/DLS, IP address: 128.3.128.208 on 26 Nov 2012

Diamond Light Source Proceedings, Vol 1, e45, page 1 of 3
MEDSI-6 2010
© Diamond Light Source Ltd 2010
doi:10.1017/S2044820110000778

Poster paper

New optical mount design for Canadian Light Source far infrared beamline

T. MAY†, S. CHEN, D. BEAUREGARD, D. TAYLOR AND T. JOHNSON

Canadian Light Source Inc., 101 Perimeter Road, Saskatoon, SK S7N 0X4 Canada

(Received 14 June 2010; revised 13 October 2010; accepted 4 November 2010)

The Canadian Light Source far infrared (IR) beamline uses seven mirrors to transport the IR light to the spectrometer experimental station (May *et al.* 2006). A new mirror mount provides more stability and precision control of mirror alignment. The design uses a gimbal arrangement that reflects the IR beam through 90°. Internal motor actuators for 2° of angular rotation (pitch and roll) and 1° of translation drive the mount. The two independent rotation axes intersect at the mirror centre to minimize translation offset when rotated. Translation along the incoming beam axis allows focus adjustment of the elliptical mirrors mounted. Beam steering using closed loop control with position feedback is precise and repeatable. Piezo-actuator tilting mirrors in an active optics system use this gimbal design for mounting. The design is compact and scales to the size of the mirror to be mounted; this allows installing new components into the existing chambers. We present features of the mount that include in-vacuum operation (Ultra High Vacuum (UHV) possible with change of motor type), economic materials and ability to handle heavy elements of 33 kg or more.

1. Mirror mount design

Canadian Light Source far infrared mirror mounts having six degrees of freedom (DOF) are prone to vibration at low (<120 Hz) frequencies, have no position feedback and drift over time due to ball joints and bellows forces. A new design provides three DOF and stable, reproducible motion with position feedback accurate to 5 μm (table 1). Mirrors weigh up to 16 kg and have slots on the sides for mounting into a frame with no distortion of the front surface. Design constraints included the following: fit into the existing rough vacuum (20 mTorr) chambers on ISO-KF standardized vacuum flange geometry (NW) style flanges, and have same optical axes and no bellows/mechanical feedthroughs. It also needed to adapt to different mirror dimensions and for Ultra High Vacuum (UHV) use on one mount. Stepper motor linear actuators (Haydon Kerk, Waterbury, CT 06705, USA) chosen had low power, small size, and compatibility with driver electronics, step size and range. Two angles of tilt and roll are adequate to position beam onto the next mirror, and a translation along the optic axis allows for focus adjustment. Each motor

† Email address for correspondence: tim.may@lightsource.ca

	M6		M4		Active optic	
	Step size	Range	Step size	Range	Step size	Range
X	5 μm	±10 mm	5 μm	±15 mm	–	–
Pitch	22 μrad	±2.5°	28 μrad	±2.5°	83 μrad	±2.5°
Roll	25 μrad	±2.5°	32 μrad	±2.5°	96 μrad	±2.5°

TABLE 1. Specifications of angles and translation for three mounts

needs two limit switches, a position sensor (Heidenhain, Schaumburg, IL 60173, USA) and resistive temperature device giving a total of 49 wires to route through the vacuum flange. Two 25-pin feedthroughs separate motor current pulses from gauge wiring. Silver-plated copper braids from motors to framework aid cooling as two motors suspend from yokes on cantilevered pivot bearings (Riverhawk Company, New Hartford, NY 13413, USA). Limited angular motion of a few degrees is needed, so flexural pivots can be used. Figure 1 shows two views of the mount on the flange without wiring: motor mounts in gimbal yokes and mirror in large gimbal; long cylinders are length gauges.

Flexural pivot bearings at the ends of the mirror cradle and on the sides of the gimbal frame operate with no free play; are stable, strong and compact; and assembling is relatively simple. Aluminum parts for rough vacuum and bearings align on cradle parts with ground rods. Linkages to motor yokes use smaller-diameter pivots. Motion is precise and repeatable.

2. Active optic tilter mounts

Fast beam steering mirrors for active optic control are an addition to the beamline. The new pivot design supports and aims smaller 50 mm diameter piezo-

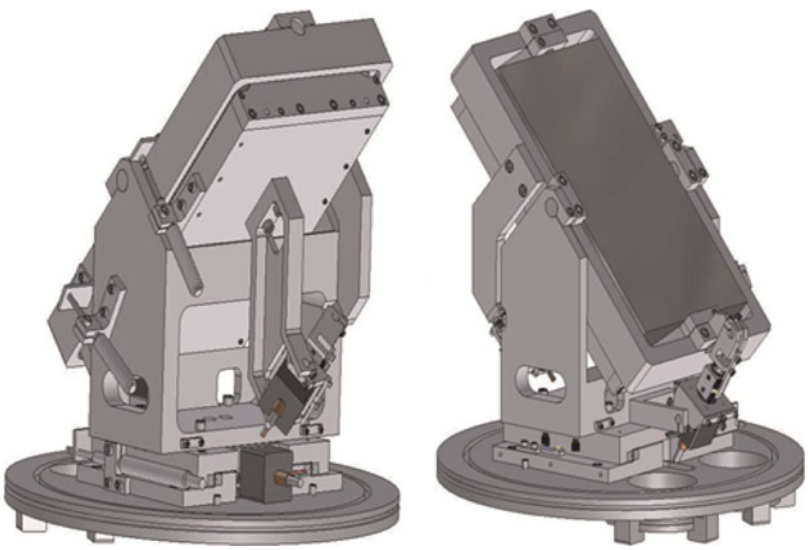

FIGURE 1. Two views of mount showing motor and pivot orientations.

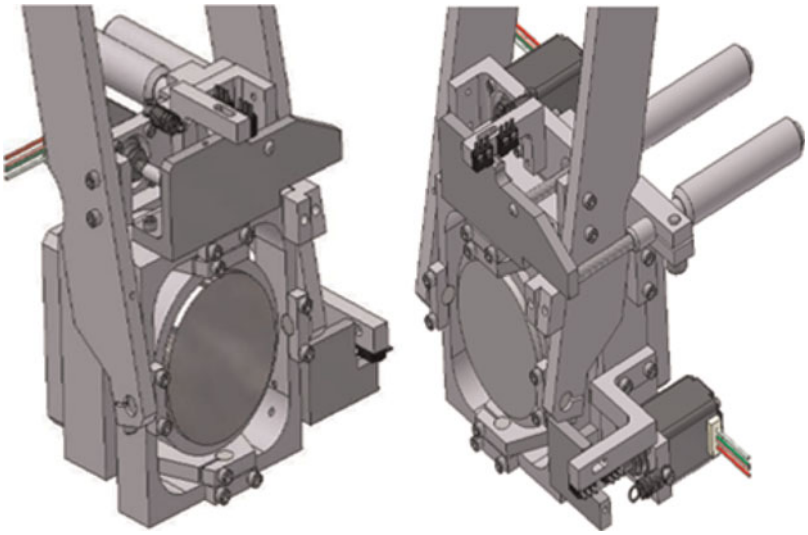

FIGURE 2. Two views of tilter mount showing motor and pivot orientations.

electric tip/tilt platforms (Physik Instrumente GmbH & Company, Auburn, MA 01501, USA). A compact design to fit into existing beamline space is given in figure 2.

These tilters use actuators of smaller size and require no translation. Cradles are smaller and have spacers to allow for differing mirror thickness attached to the tilter. A single steel piece on the cradle acts on both position gauges whose location on frame or mount allow gauging the two angles of tilt. The software to drive the motors can operate open or closed loop. The open loop is direct control by number of steps with passive position readout. Closed loop uses gauge readings to move to a precise position. A calibration routine homes the gauge to a limit switch and registers an index pulse in the gauge to assure precise relocation. The software converts linear displacements into angular values from the geometry of drive and gauge locations relative to the pivot axes.

3. Conclusion

The new mount works well with positions maintained within a micron over weeks of operation. The feedback loop control makes relocating the mirror to a previous position a simple precise operation.

REFERENCE

MAY, T. E., APPADOO, D. A., ELLIS, T. & REININGER, R. 2006 Infrared beamlines at the Canadian Light Source. In American Institute of Physics Conference Proceedings 879, Synchrotron Radiation Instrumentation: Ninth International Conference, 579–582. AIP.