DEVELOPMENT OF STRUCTURAL DAMPING FOR ACCELERATORS

D.J. Wang, S.Y. Perng, C.K. Kuan, H.C. Ho, T.C. Tseng.
National Synchrotron Radiation Research Center.
101 Hsin-Ann Rd., Hsinchu Science Park Hsinchu 30077,Taiwan, R.O.C.

Abstract

A highly- damping material was used in a new magnet girder to suppress vibration. Its structure was of steel and polymer concrete composite material. It provided good damping, exhibiting negligible creep, and enough high strength. The original structure was also easy to upgrade. It was used between the pedestal and the ground to replace the conventional concrete. It could also be used as the inner structure for the bending mode damping of girder. A prototype of girder was made using this technology. Its performance is encouraging. This study addresses design, material selection and test results.

1 Introduction

The nearby magnet girder will be modified to accommodate a newly installed super-conducting wiggler in NSRRC storage ring. A prototype of new girder was designed and fabricated. The new girder has higher eigenfrequency (35Hz) than the old one and enough damping (Q = 13)[1]. The composite material was used in the newly designed girder. It was composed of polymer concrete and steel. In general, polymer concrete has a higher damping factor than steel. Stiffness is also high enough. Polymer concrete has been reported to enhance the damping in a mechanical structure [2,3]. Some vendors have announced that its damping capacity is about eight times of granite or six times that of normal concrete. The thermal expansion coefficient equals that of the steel. It seems attractive for use in the vibration sensitive structure in the synchrotron facility. Using it in some critical place will promote the damping. Additionally, it can be used inside the structure to enhance stiffness and damping, other damping devices such as a damping pad or a damping link can also be added on. This work presents the experience of using this composite material in the mechanical structure in the NSRRC.

2 Damping Material

Structural damping refers to the removal of vibration-related mechanical energy from a structure. This usually involves conversion of cyclic strain energy into heat. Some mechanical structural designs such as those of a magnet girder, seek to exhibit high eignfrequency and high damping. Table 1 lists some related properties of material. The Table indicates that steel is a high stiff material but its loss factor is low. Viscoelastic material has a high loss factor but it's too soft to be used to construct the main structure. Granite has moderate damping but it's inconvenient to make complex shape. Portland cement also exhibits good damping but its cracking or strength are concerned. Normal concrete is also hydrophilic and changes shape as it absorbs water.

Polymer concrete has more than ten times the loss factor of steel, and is sufficiently high Young's modulus. Various products can be chosen. The loss factor in Table 1 has a large range. Its stiffness/density ratio is general high; especially some special fillers have been added. The adhesion of the polymer to steel is good enough that the shear force is easily transferred. It can achieve high stiffness and high damping with different mechanical designs. For example, a tennis racket with carbon fibres composite has better stiffness and damping than aluminium racket.

In the magnet of synchrotron facility epoxy resin has been used in the coil insulation for a long time, it would be helpful to suppress the flow induced vibration. Radiation damage is not an issue.
In our test we used an epoxy resin XH130 mixing with sand. It was a high strength multi-purpose epoxy chocking material.

Table 1: Properties of Various materials

Material	***Loss factor ratio*** *($\eta=9*10^{-4}$ for mild steel)*	***Young's Modulus*** *(10^5 MPa)*	***Reference***
6063 Al	*0.55*	*0.75*	[4]
Mild Steel	*1*	*2.1*	[4]
Cast Iron	*1.3*	*1.7~2.1*	[4]
Granite	*5.5*	*~ 1*	[4]
Portland cement	*5-8*	*0.18-0.3*	[5]
Lead	*8.8*	*0.157*	[4]
Polymer concrete	*10-40*	*0.25-0.35*	[6]
Viscoelastic Material ISD 112	*300*		[5]

3 FRF Test of Girder Structure

3.2 FRF Test of Pedestal

Two types of pedestals with and without a concrete base were tested. The size of pedestal was about 40cm x 60cm x 60cm. They were anchored to the ground by four M20 bolts, leaving 6cm gap from the ground, to enable the FRF test before and after the addition of base concrete to be compared. The frequency response function in the transverse direction was measured by the hammer test. The Q value was measured by the half power method. Then, normal concrete or polymer concrete is fed into the gap and measured again. Figures 1 and 2 show the results. Both the normal concrete and polymer concrete could increase the eignfrequency more than three times and damping more than 2 times. Polymer concrete was a little better in frequency shifting and damping. The stiffness of base after feeding concrete is higher than that of the original bolts, because the contact surface was larger. In this case the base of pedestal was the highest strain place the damping material used here helped to absorb the strain energy. Using small bolts rather than M20 more damping would be expected. The above result reveals that the eigenfrequency after base concrete was all above 160 Hz. It was sufficiently high for the magnet girder requirement. The damping factor of polymer concrete does not differ significantly from that of Portland cement concrete.

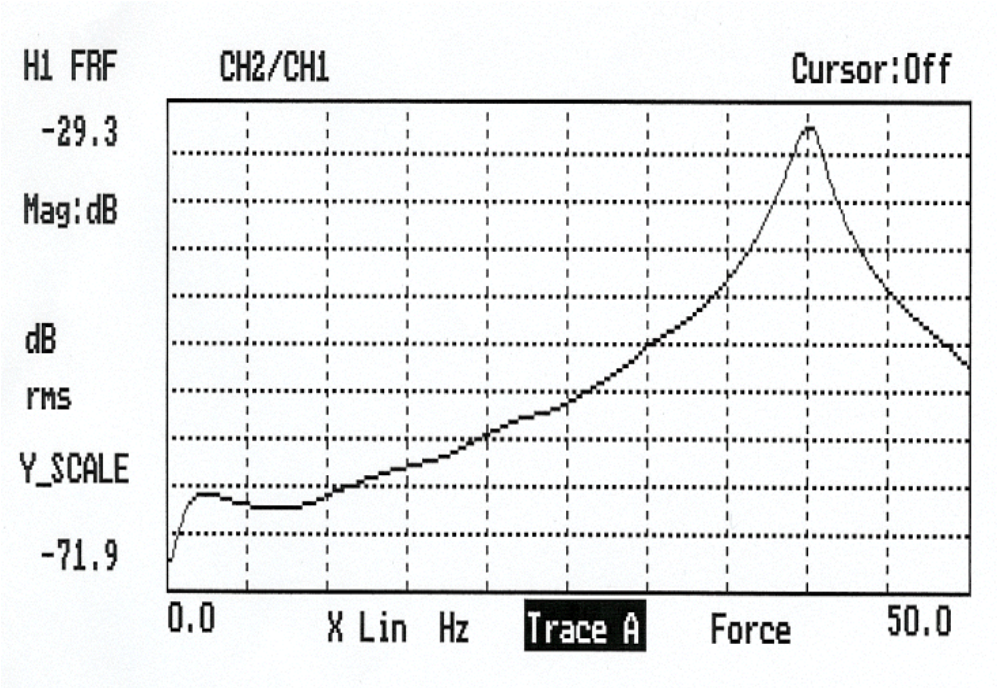

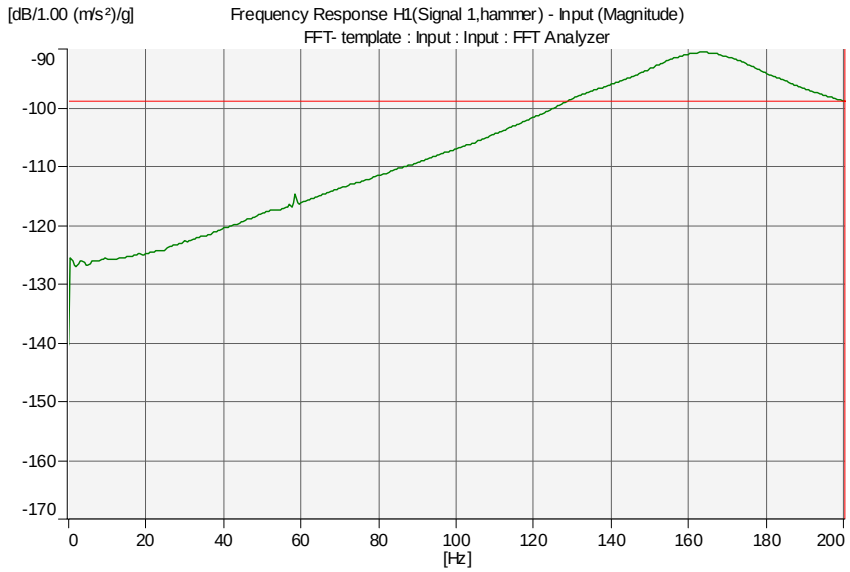

Figure 1: (Upper Figure), FRF of new pedestal without polymer concrete base. (Lower Figure), FRF of new pedestal with polymer concrete base. Q equals 5.6.

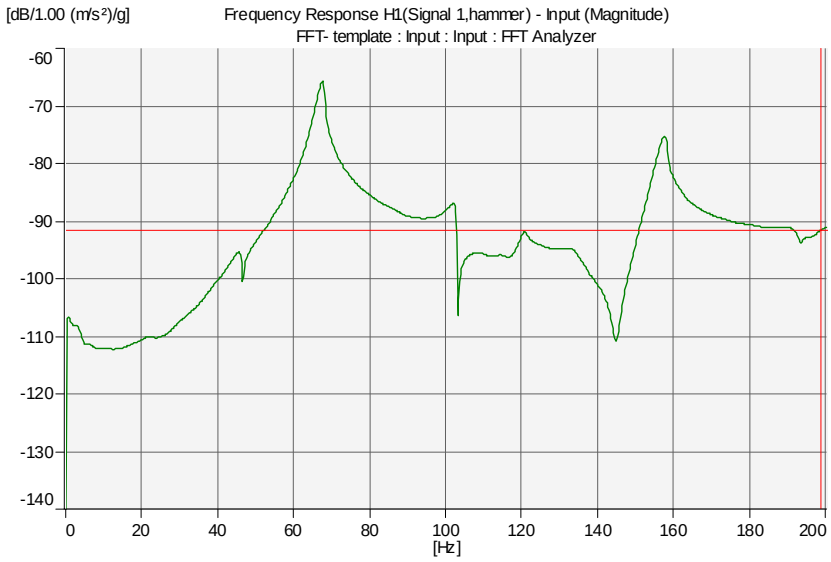

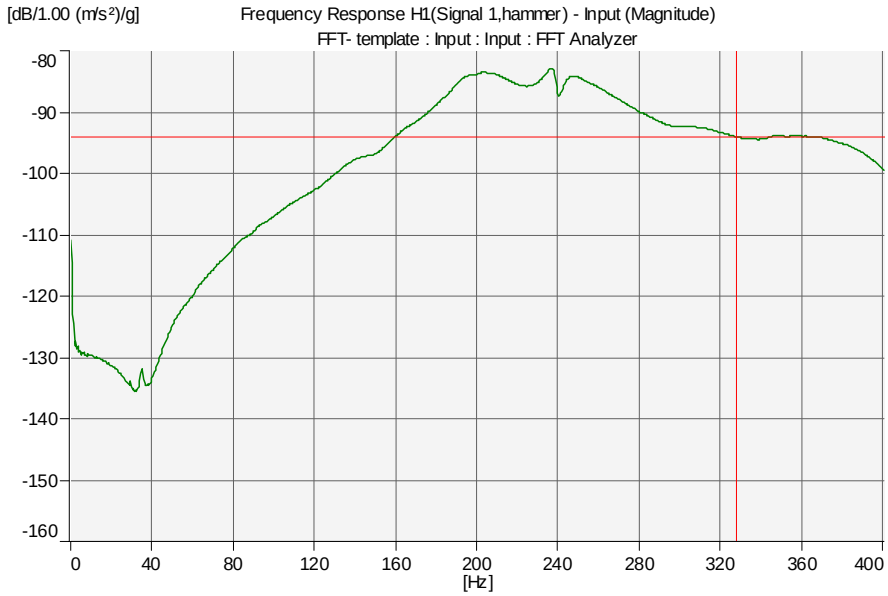

Figure 2: (Upper Figure), FRF of old pedestal without normal concrete base.
(Right Figure), FRF of old pedestal with normal concrete base. Q equals 7.

3.2 FRF Test of Girder

The girder was made by hollow steel boxed structure to reduce its weight. Inside the girder, polymer concrete was used to enhance the structure stiffness and damping of the structure.

Figure 3 shows the cross section of the girder. Four sliding stages instead of rolling stage for its high stiffness were used for the adjustability of girder. The base of the stage was initially anchored to a pedestal and then the polymer concrete was fed, as shown in Figure 4. The purpose of the feeding the epoxy below the stage base was to reduce the local high-spot to get high stiffness and damping as mentioned in above section. Figure 5a shows the transverse frequency response function of the girder mounted on four supporting stages. The eignfrequency was around 35 Hz and Q was about 13. To compare the stiffness of the four points supporting with that of three points supporting, Figure 5b shows the FRF of girder with one end decoupled from the pedestal and supported by a jack. The eignfrequency was dropped to 18 Hz. Figure 5 indicate that the girder mounted on the stable stages had higher eignfrequency and damping. The stiffness of the stage linkage strongly affected the stiffness of the system.

The equation $2*\pi*f = (K/M)^{1/2}$ was used to check the stiffness of the girder system, , with total mass 1030 Kg and f = 35 Hz. The system stiffness K was 5Kg per micron by the above calculation. It was well consistent with the stage stiffness measurement; one stage K was 1.3Kg per micron (The system has four stages). The wedge-type stage was preloaded with the total mass of girder, backlash could be reduced somewhat. It was beneficial to anti-vibration.

The eignfrequency of the old girder was about 15 Hz, and its Q was about 30. The stiffness of the old girder system was lower than the new girder, perhaps because of the weakness of the linkage between girder and pedestal caused by the tightening of bolts.

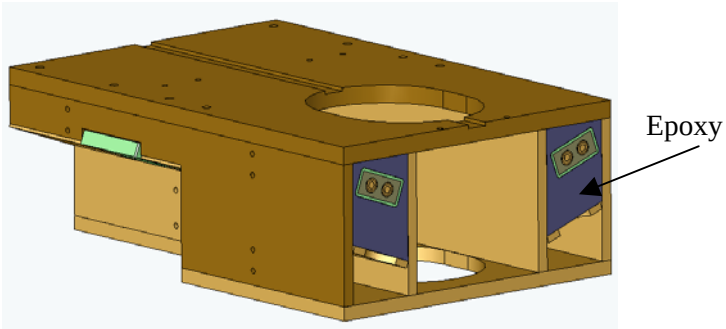

Figure 3, Cross section of the girder showing the epoxy resin inside.

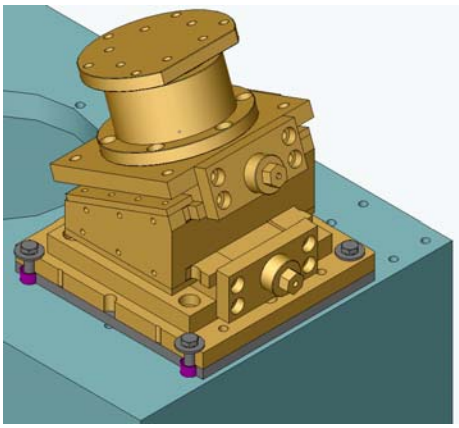

Figure 4, Adjusting stage of the girder showing the epoxy base under the stage.

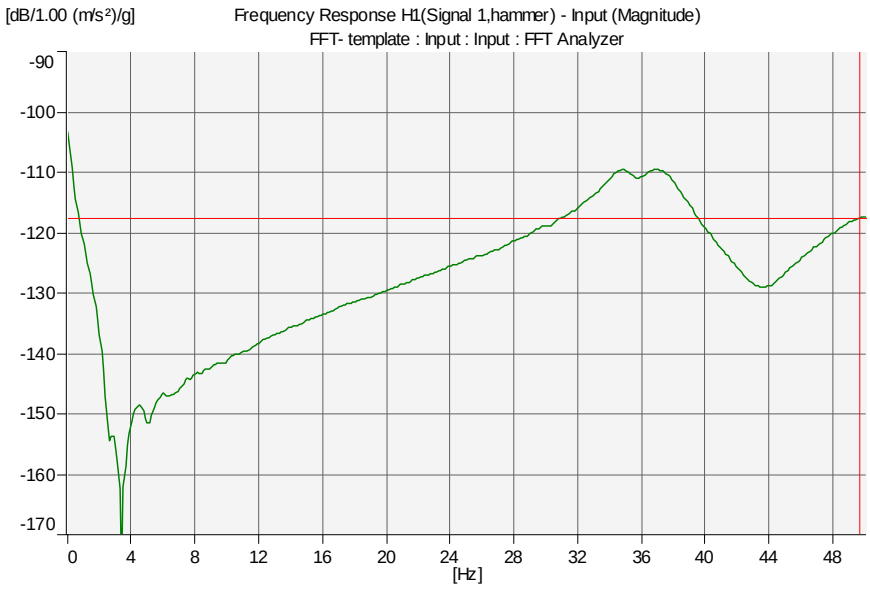

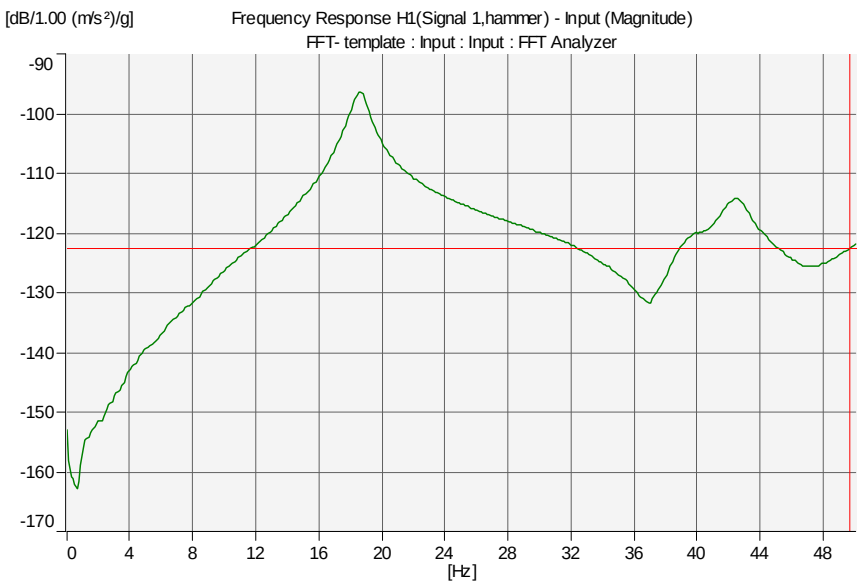

Figure 5: (a) Upper Figure, FRF of girder with 4 points supporting. Q equals 13.
(b) Lower Figure, FRF of girder with 3 points supporting

4 Application of Composite Material in NSRRC

4.1 Magnet girder

In the new magnet girder we adopted the polymer concrete as the base under pedestal, the base under girder-adjusting stage and quadrupole magnet. The FRF of Q magnet was better than the old one. It iscompared in Figure 6.

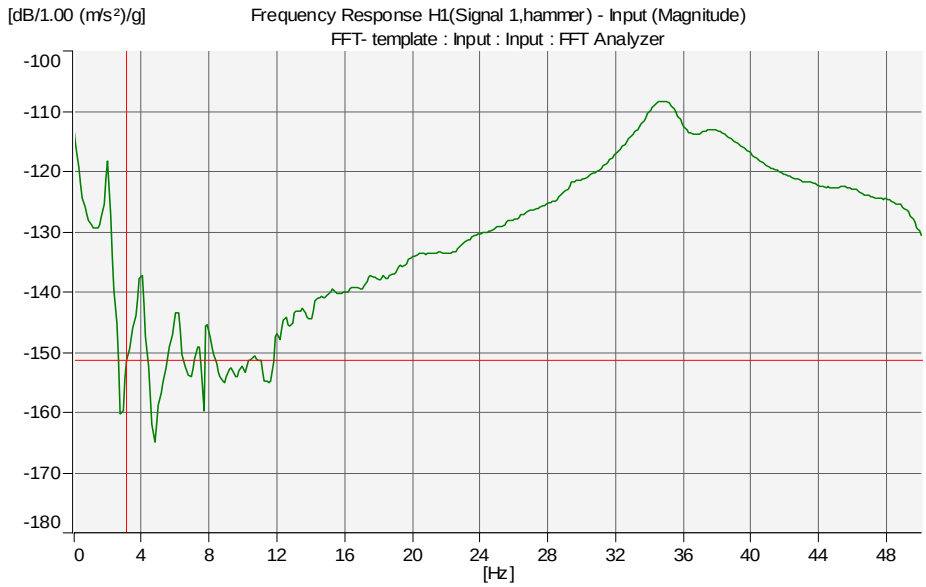

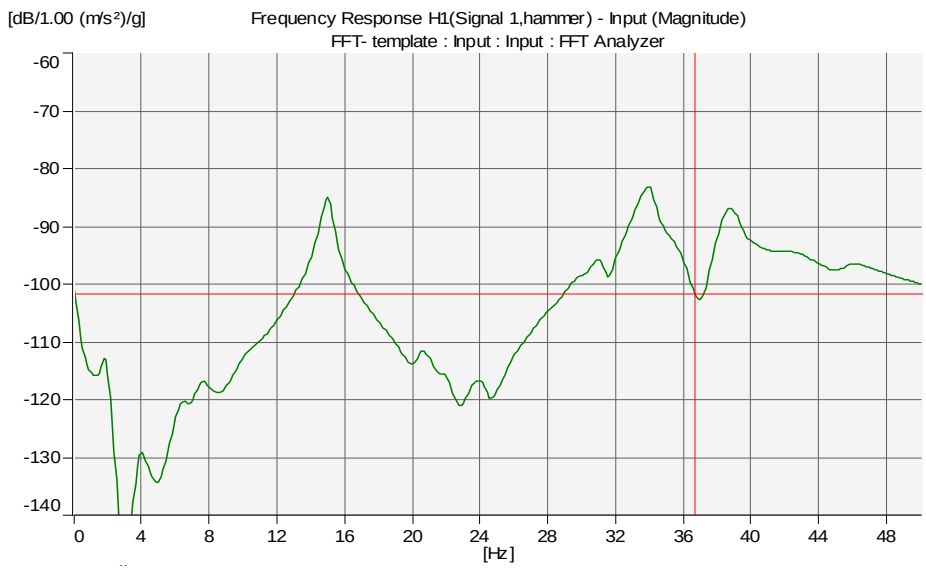

Figure 6: Upper Figure, FRF of Q magnet in transverse direction on the new girder.
Lower Figure, FRF of Q magnet in transverse direction on the old girder.

4.1 Survey Monument

Two kinds of survey monument were used. They had a height of 1.7 meter and a diameter of 40cm. The new type used an epoxy base; the old type was anchor-locked to ground. The vibration on the top of the new monument was better than that of the old one. Figure 7 plots the FRF of both monuments.

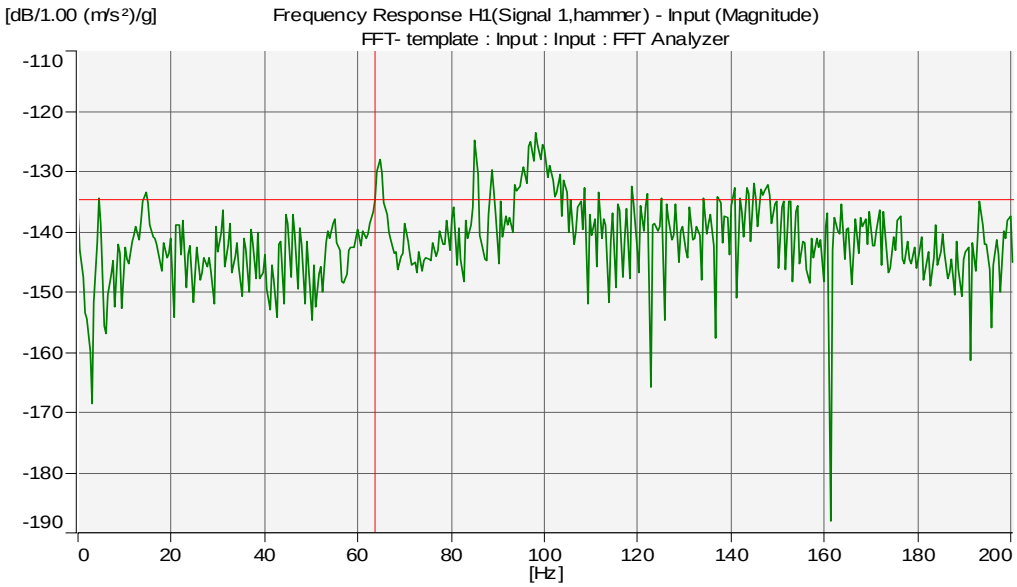

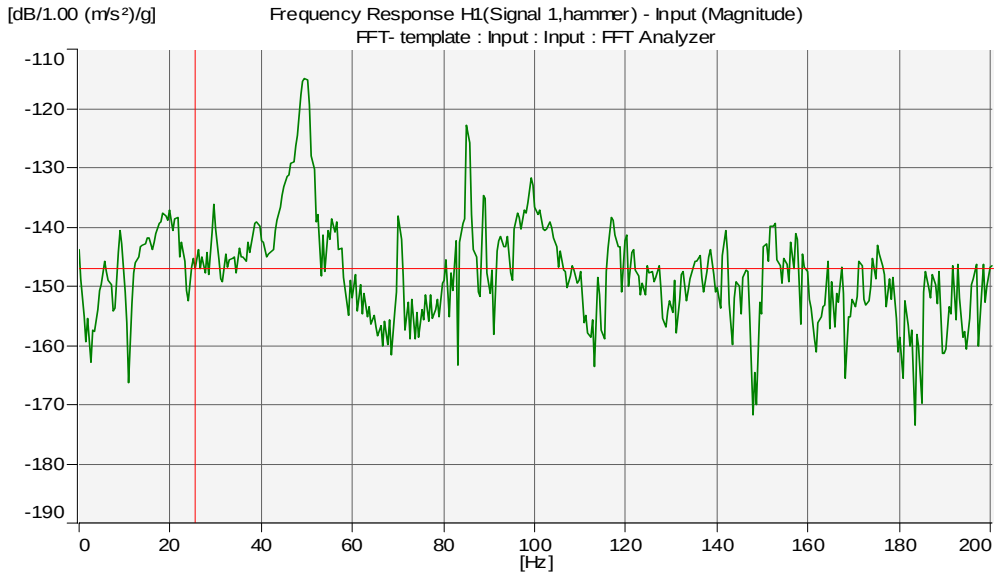

Figure 7: Upper figure, FRF of new monument in transverse direction.
Lower figure, FRF of old monument in transverse direction.

4.3 New Composite Material.

Table 2 lists potential composite material. A high-modulus material can be chosen as a filler and high loss factor material as a matrix to maximize the product E* Tanδ. The W/In-Sn alloy system is the highest E* Tanδ material published to date [7]. In the future, accelerator designer have more choice of materials when designing a new structure.

Table2 New Composite Material

Material	***Loss factor ratio*** *($\eta=9*10^{-4}$ for mild steel)*	***Young's Modulus*** *(10^5 MPa)*
Mild Steel	*1*	*2.1*
W	*1*	*4*
Mo	*1*	*3.2*
SiC	*1*	*4.6*
In-Sn alloy	*>100*	*0.2*
Mg	*4*	*0.45*

5 Summary

A composite material was used in the new magnet girder design. Its stiffness and damping were better than those of the old design. Composite material usually offers the advantage of high damping, and the disadvantage of low strength could be compensated for by a highly stiff structure. The development of new composite materials gives designer greater choices of material.

6 References

[1] D.J.Wang, S.Y.Perng, H.C.Ho, T.C.Tseng, C.K.Kuan, "New magnet girder design in the NSRRC"
APAC 2004, Gyeongju, Korea.

[2] M. Weck and Hartel " Design, manufacture and testing of precision machines with essential polymer concrete components" Precision Engineering, 7(1985)3, p165

[3] Eric R. Marsh and Alexander H. Slocum, " An integrated approach to structural damping" Precision Engineer 18 (1996) 2, p104

[4] Lazen,B. J. " Damping of material and members in structural mechanics" London; Pergamon, 1968

[5] C.T.Sun and Y.P. Lu "Vibration damping of structural elements" London, Prentice Hall, 1995

[6] Super alloy polymer concrete, Philadelphia Resins

[7] R.S. Lakes, "high damping composite materials: Effect of structural hierarchy" Journal of Composite Materials , 36(2002)3, p287