White-Beam Stop for the IXS Beamline at APS

Branislav Brajuskovic

Yifei Jaski

Deming Shu

IXS Beamline Layout

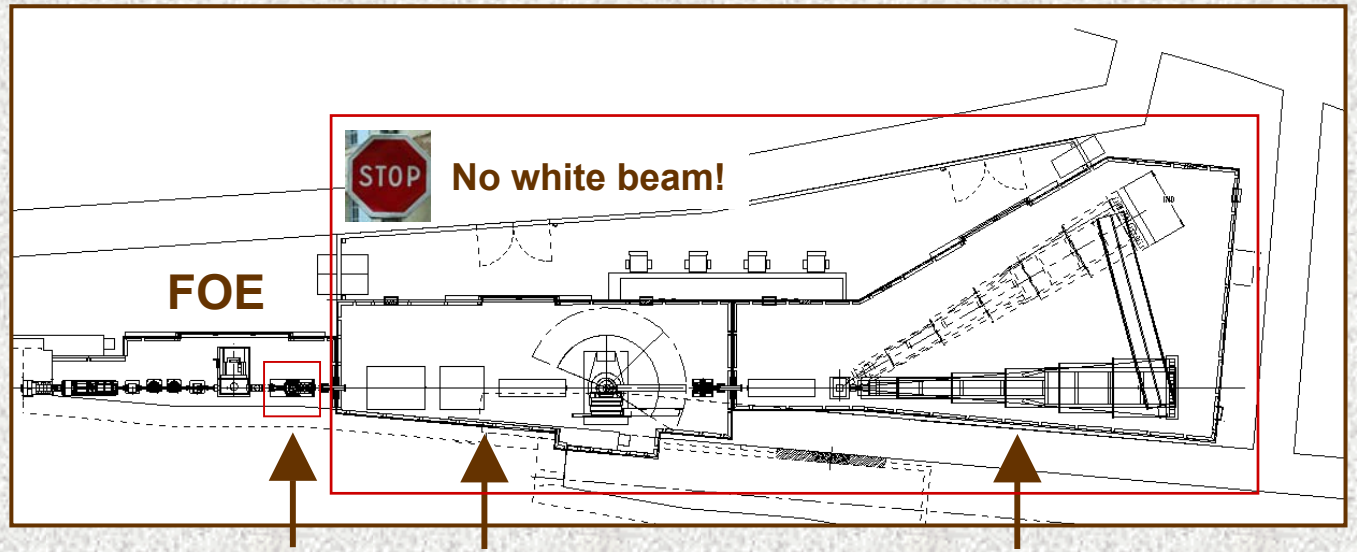

P5 SHUTTER

Integral shutter with white-beam stop

MERIX

Collective valence electron excitations in correlated electron systems of transition-metal oxides

HERIX

Collective excitations of atoms, ions, molecules or polymer etches in crystals and in disordered systems

Three inline undulators

Standard P5 Integral Shutter

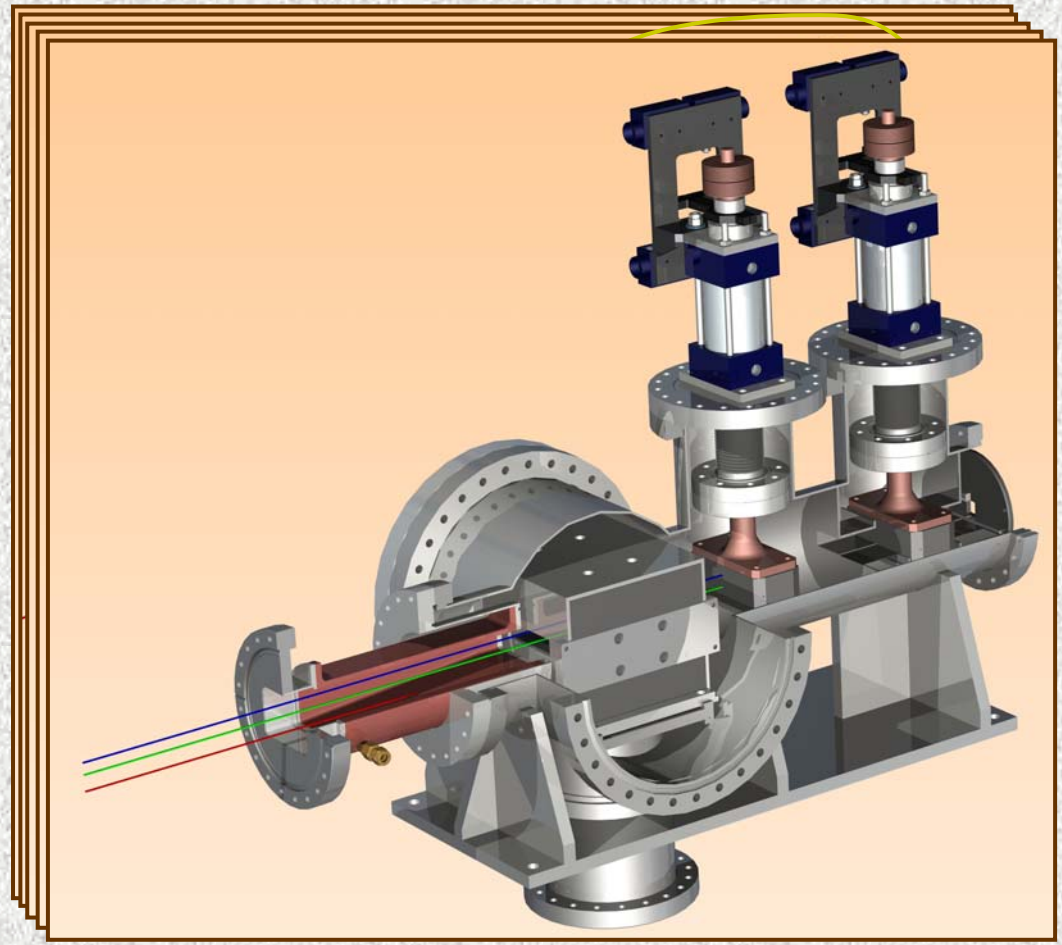

Three functional units

1. White-beam stop
2. Bremsstrahlung stop
3. Mono-beam shutters

Calculation of the Thermal Load

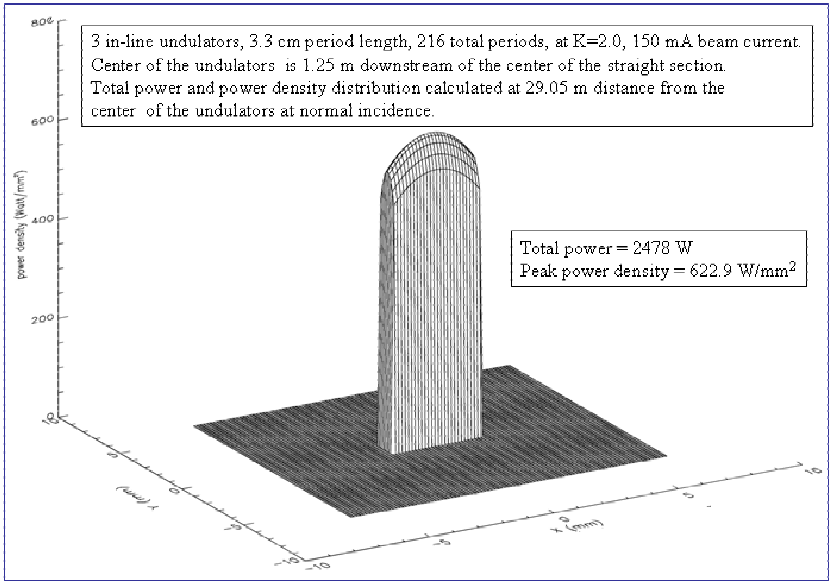

$$Q(x,y) = 623e^{-0.034322x^2}e^{-0.3992y^2} \quad W/mm^2$$

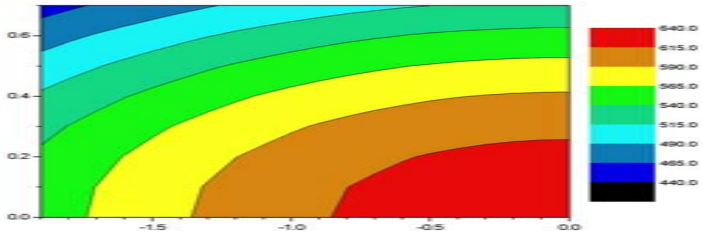

Thermal load distribution at normal incidence was calculated using program SRUF

- **Total power absorbed by the white beam stop is 2.5 KW**
- **Peak heat flux is 625 W/mm²**

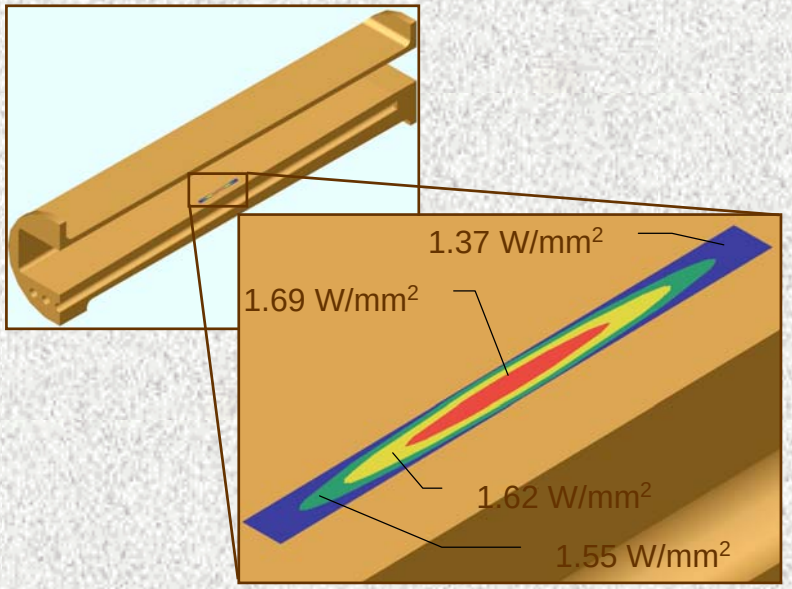

Calculated thermal load distribution was projected on the intercepting surface of the WBS model

Finite Element Method Analysis

1. Steady state, normal operating conditions

Varied parameters:

Angle of incidence
Convective heat transfer coefficient

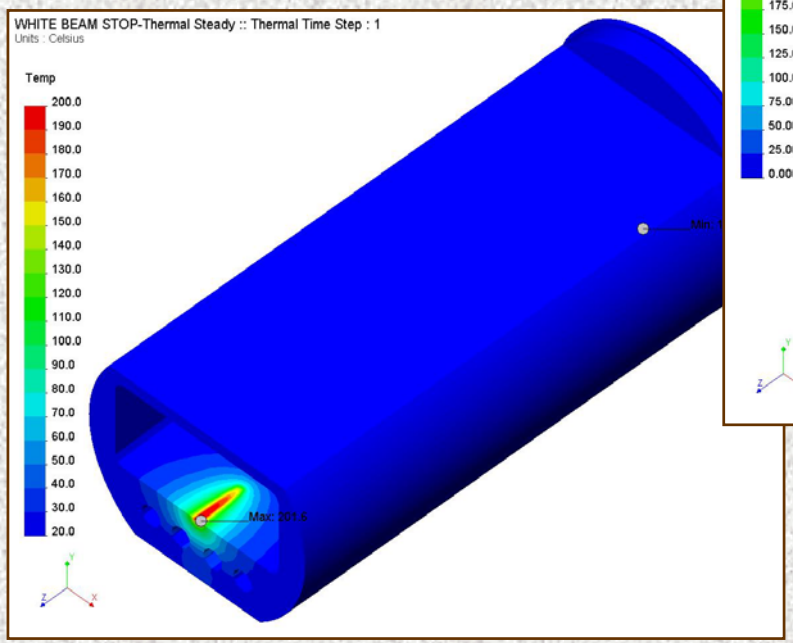

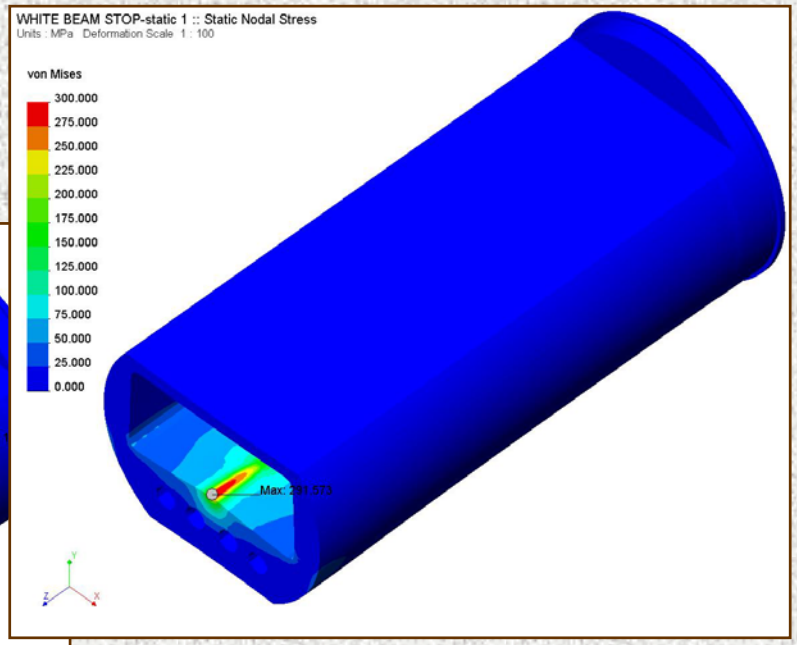

For incidence angle α= 1.5° and coefficient of heat transfer h = 15 kW/m^{2}K (spiral inserts)

$T_{max} \cong 200$ °C, no boiling **$\sigma_{max} < 300$ MPa**

Finite Element Method Analysis

2. What-if scenarios (steady state)

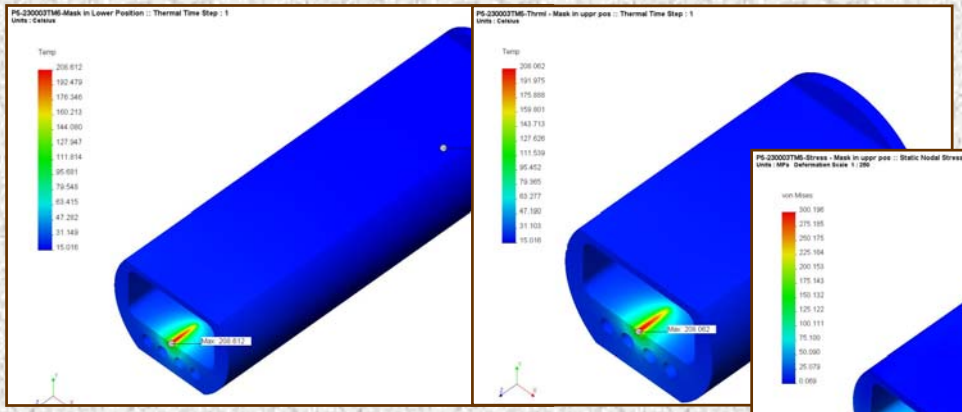

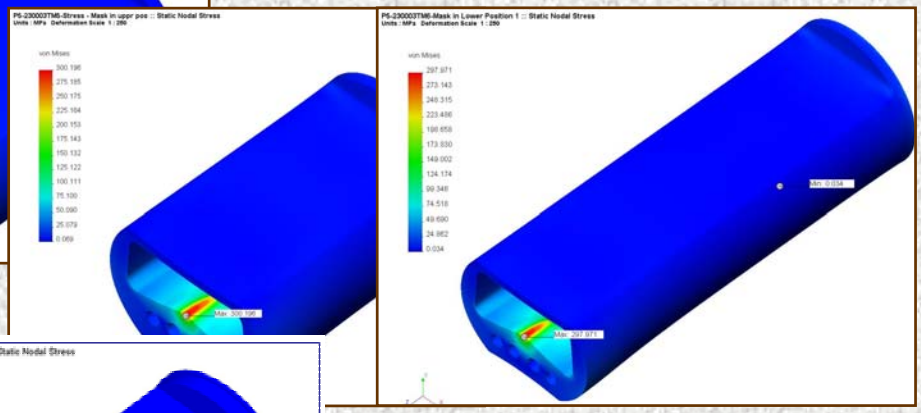

2.1 Change in the position of the exit mask causes only minor changes in temperature and stress values

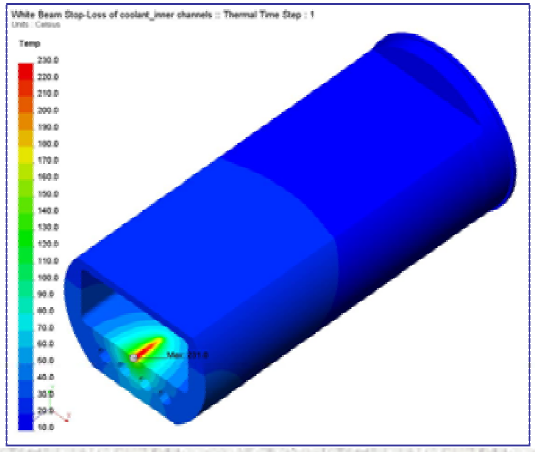

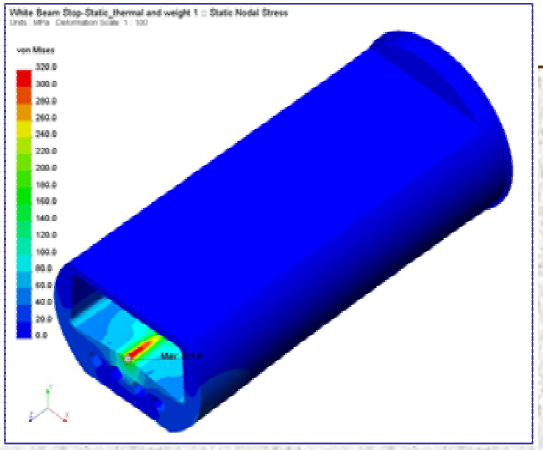

2.2 Partial loss of coolant

inner cooling channels blocked:

T_{max} < 235 °C, no boiling

σ_{max} = 315 Mpa > 300 MPa

Finite Element Analysis

3. What-if scenarios (transient)

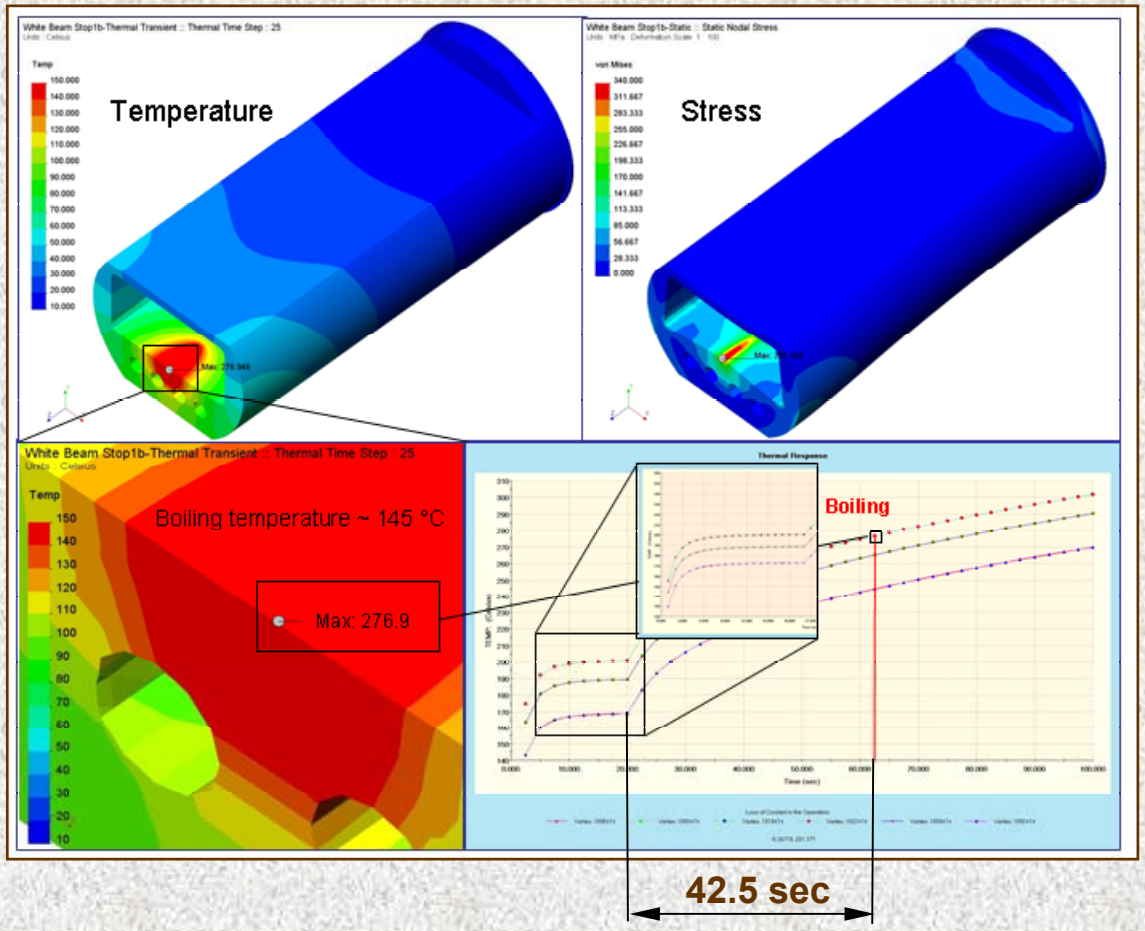

Catastrophic failure occurs in <45 sec after the loss of coolant:

σ_{max} = 340 Mpa > 300 MPa

T_{max} < 280° C

$T_{wall} \cong$ 145° C, onset of boiling

Design Changes

Old white-beam stop

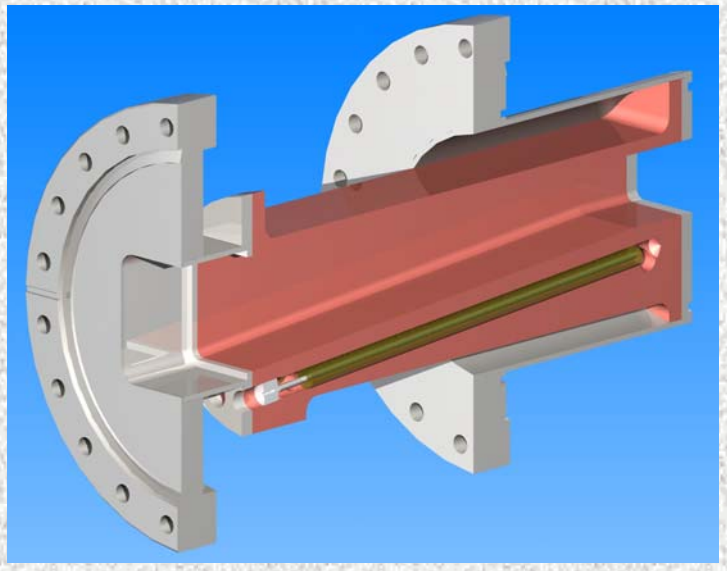

Angle of incidence: 4.5 °
Copper mesh, h = 20 kW/m^{2}K
Overall length: 250 mm

New white-beam stop

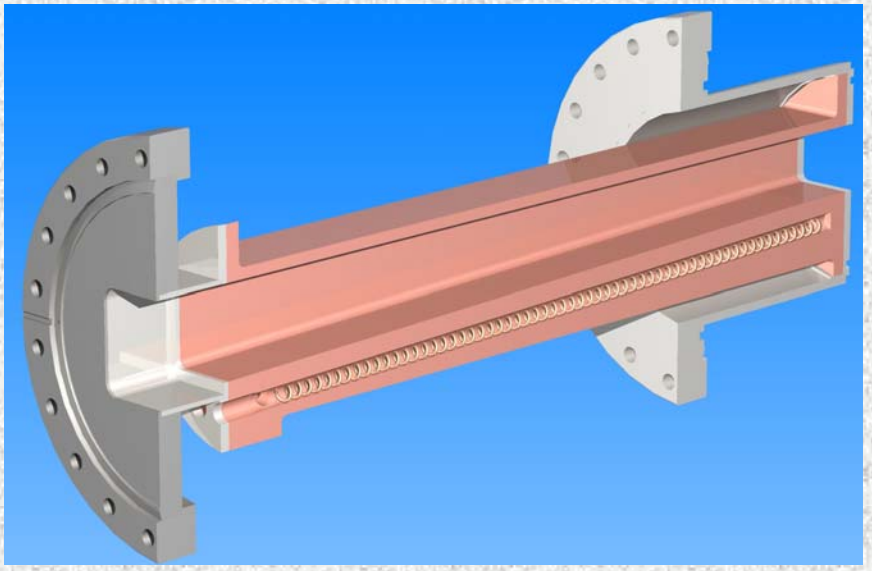

Angle of incidence: 1.5 °
Copper coil, h = 15 kW/m^{2}K
Overall length: 430 mm

Conclusions

A new white-beam stop was designed that:

1. can withstand the increased heat loads that accompany three collinear undulators,
2. can be easily integrated with the existing design of the P5 shutter.
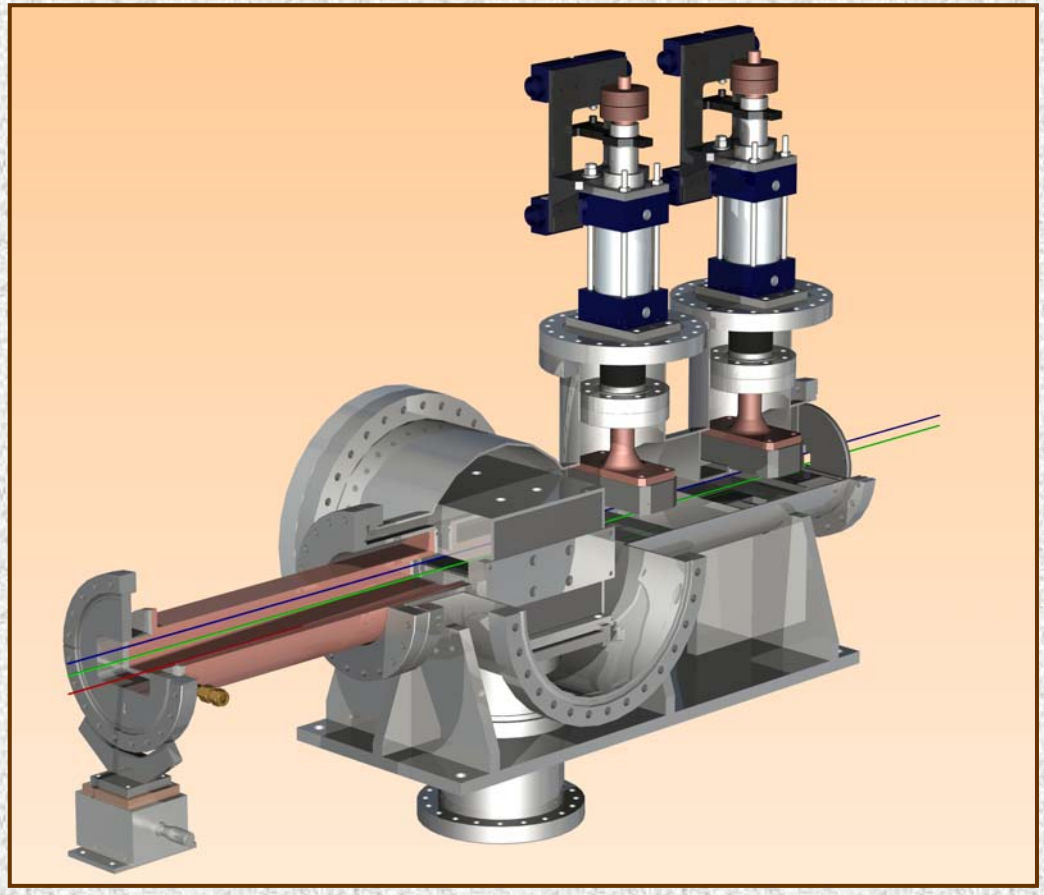
The results of the FEA show that the new design will provide reliable operation of the integral shutter. The only condition that can cause catastrophic failure is total loss of coolant.