qRIXS Spectrometer Design

- Resonant Inelastic X-Ray Scattering (RIXS) with the capability to vary the momentum transfer (△q) (qRIXS)

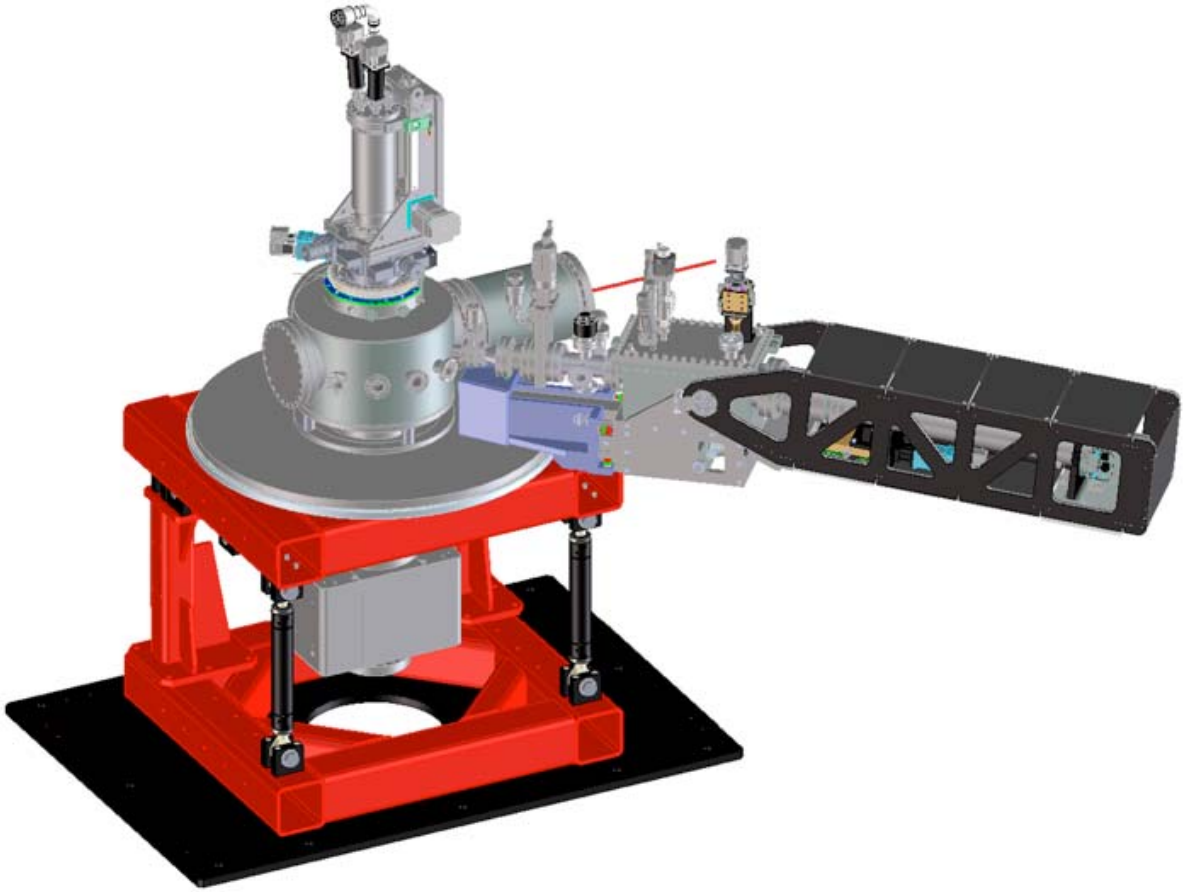

Background - Endstation Overview

- Scientific goals (brief)
- Overview of endstation project goals
- Key components of design
  - Optical layout & Design
  - “Kinematic” interchangeable mounting system
  - Detector positioning - Swing arm design

Scientific goals

- Energy Range 100 eV - 1.2 KeV
- Moderate resolving power, High through put

– Resolving power >5,000 @ O K edge (540eV)

drops to ~3,300 at 1,000eV

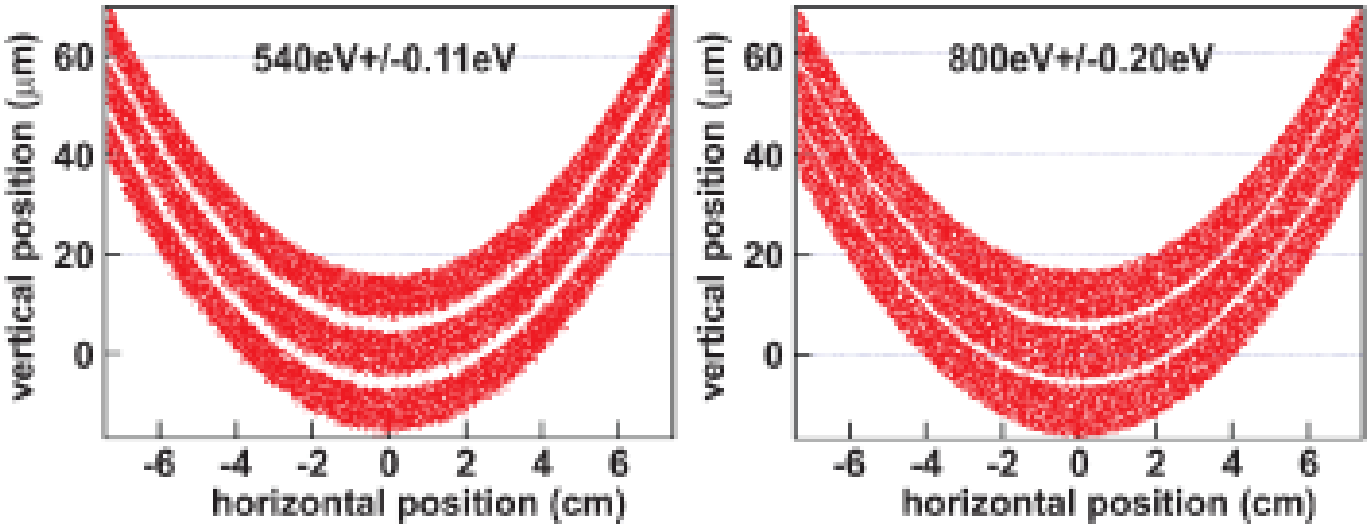

SHADOW simulation showing the resolving power at 540eV (left panel) and 800eV (right panel).

Scientific goals & Design Requirements

- Compact size
  - Opportunity to use several spectrometers simultaneously to cover a large horizontal angle
- Modular Design
  - Easy to transport, setup, align
- Design trade off
  - Resolving power usually scales with the length
  - Throughput usually scales inversely with the length squared

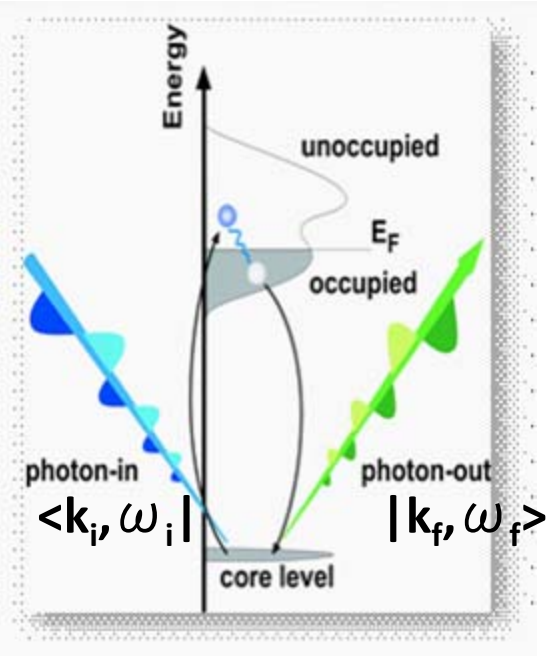

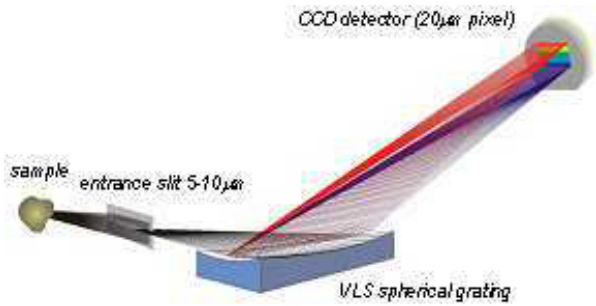

Background Endstation Overview

- Planned To be used at ALS Beamline 8.0.1.2, LCLS, and TLS
  - Backscattering Range: 25^0 to 155^0
    - Accomplished with +/- 15^0 chamber rotation and movement of spectrometer arm from port to port

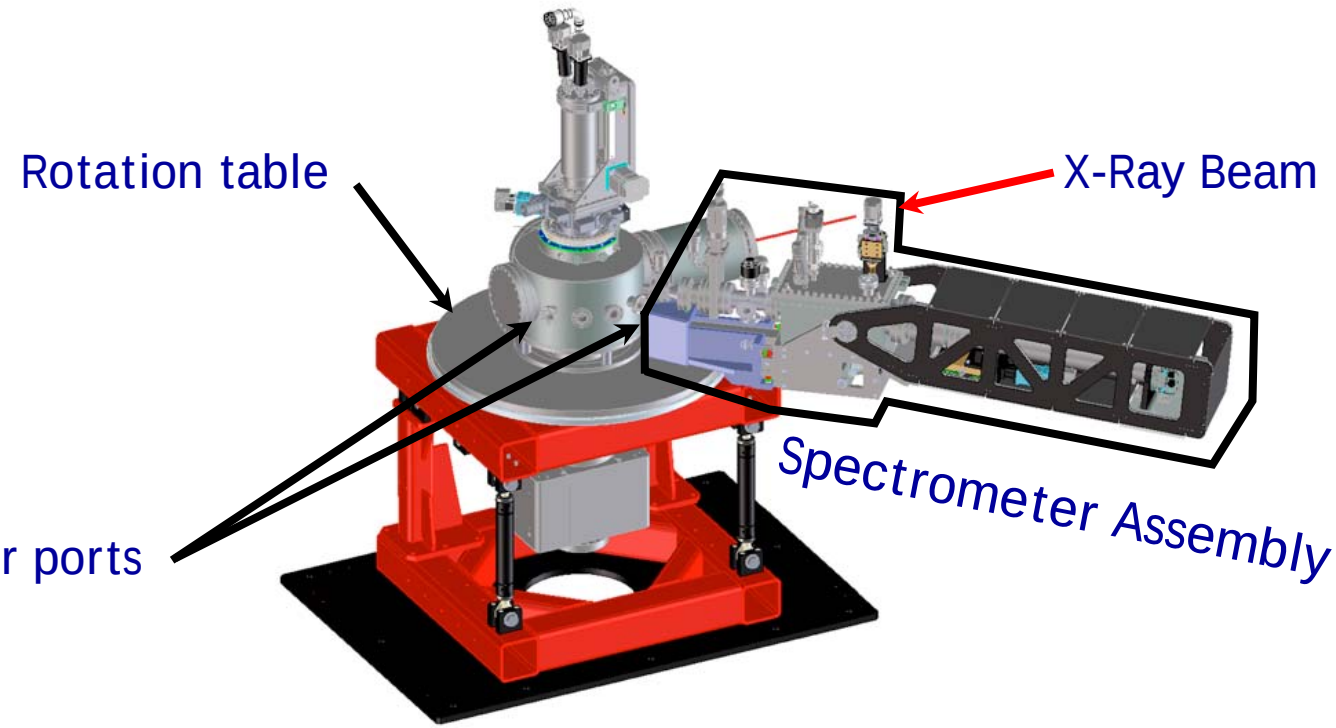

Background Endstation Overview

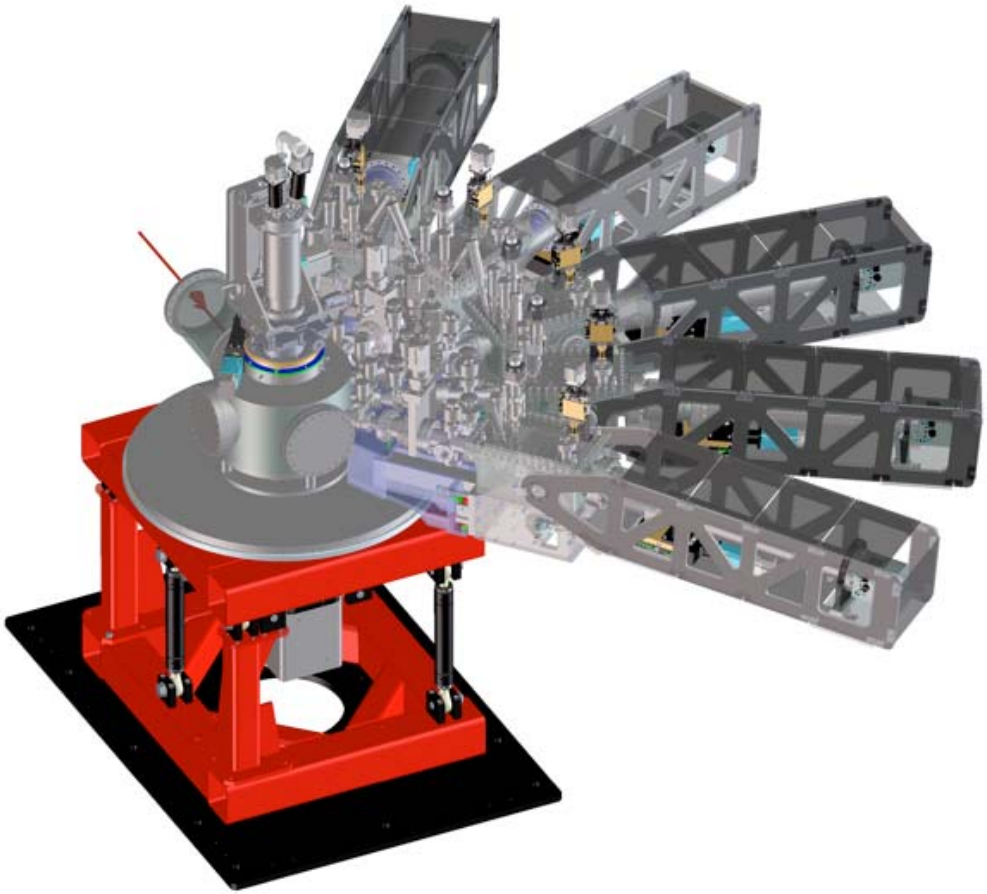

- Endstation will have capability to accommodate spectrometers on all 5 ports

Background Endstation Overview

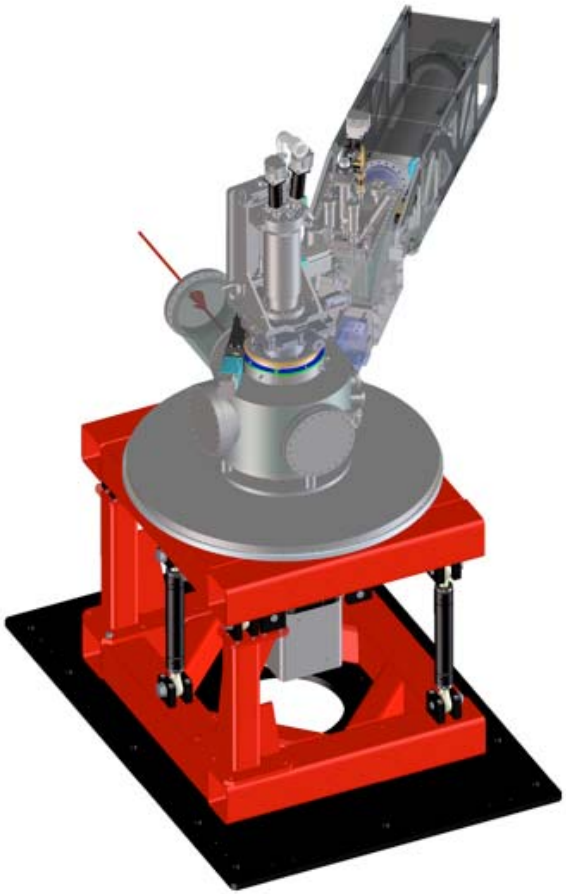

- Endstation will have capability to accommodate spectrometers on all 5 ports

Background Endstation Overview

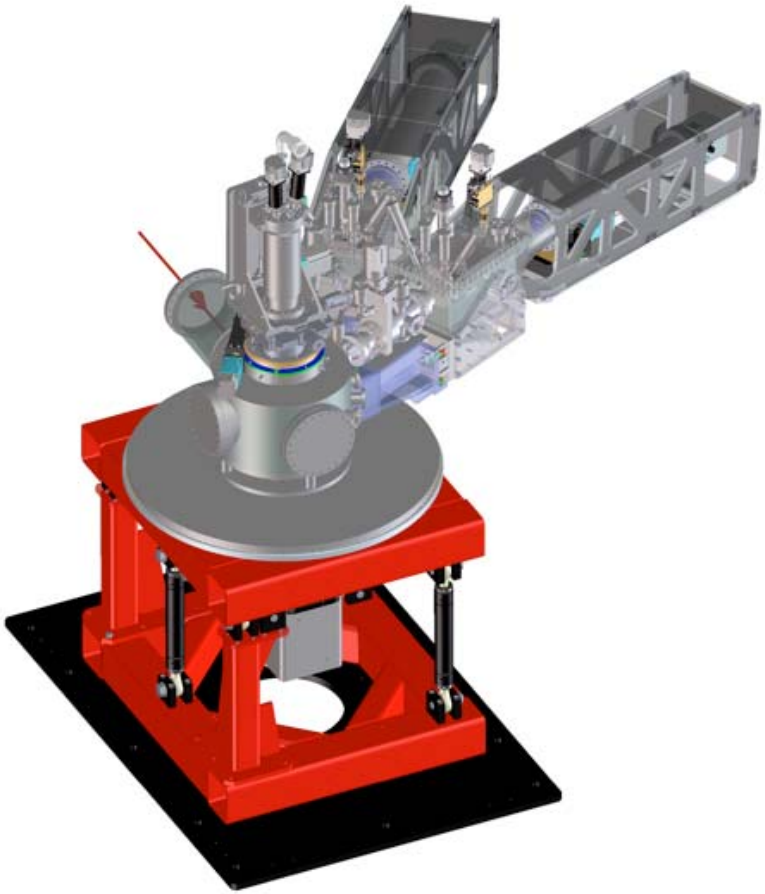

- Endstation will have capability to accommodate spectrometers on all 5 ports

Background Endstation Overview

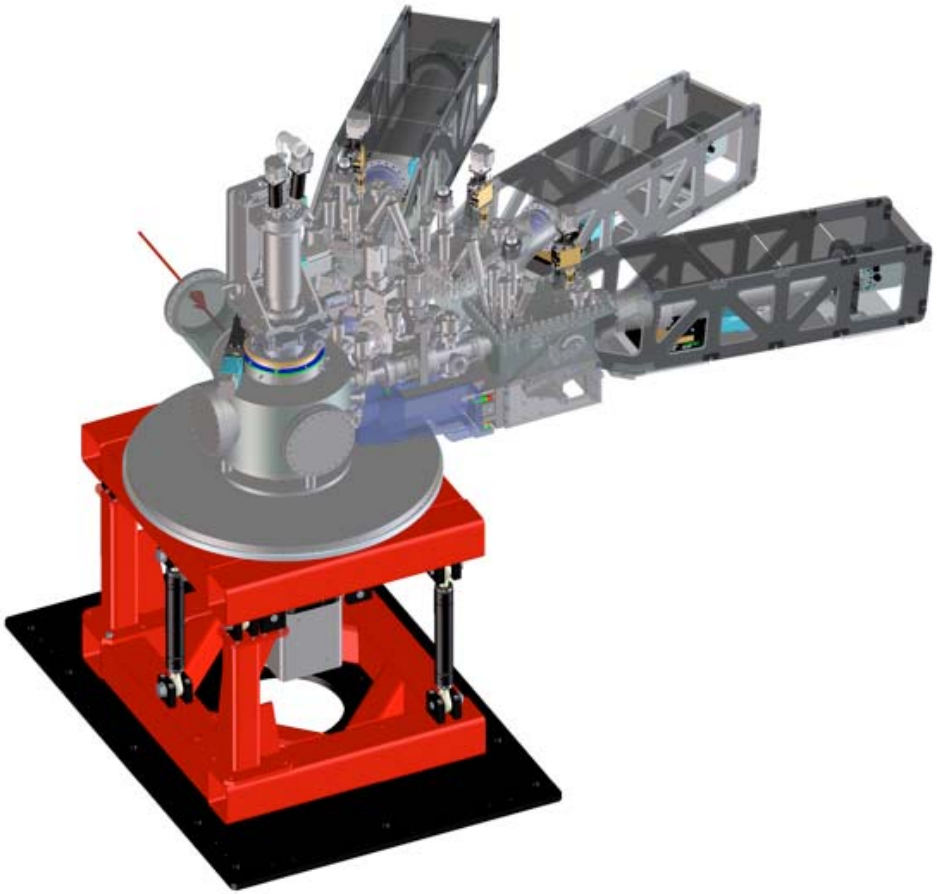

- Endstation will have capability to accommodate spectrometers on all 5 ports

Background Endstation Overview

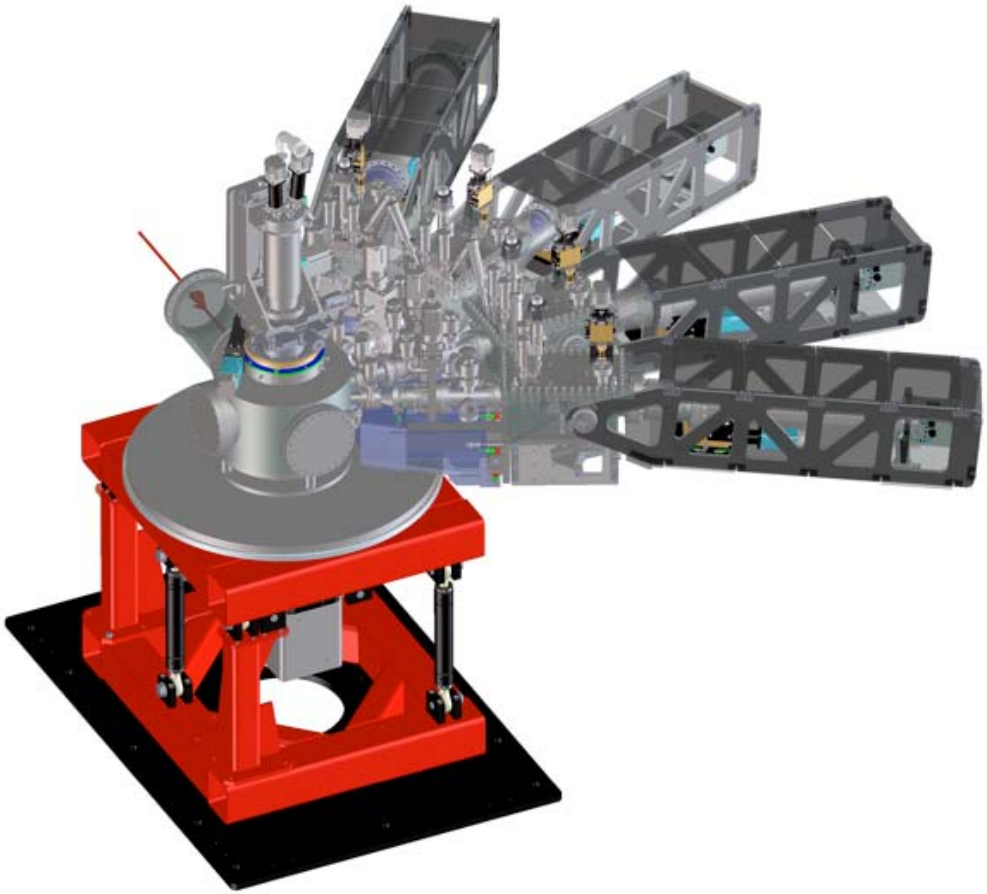

- Endstation will have capability to accommodate spectrometers on all 5 ports

Background Endstation Overview

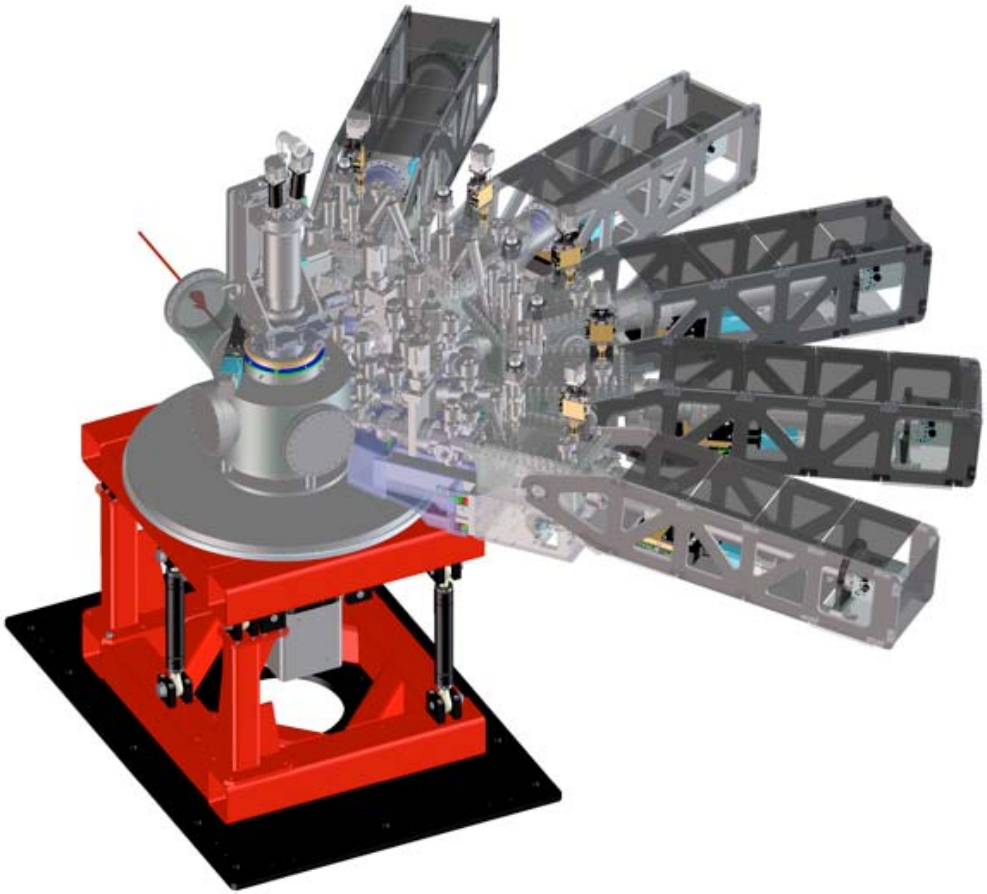

- Endstation will have capability to accommodate spectrometers on all 5 ports

Background Endstation Overview

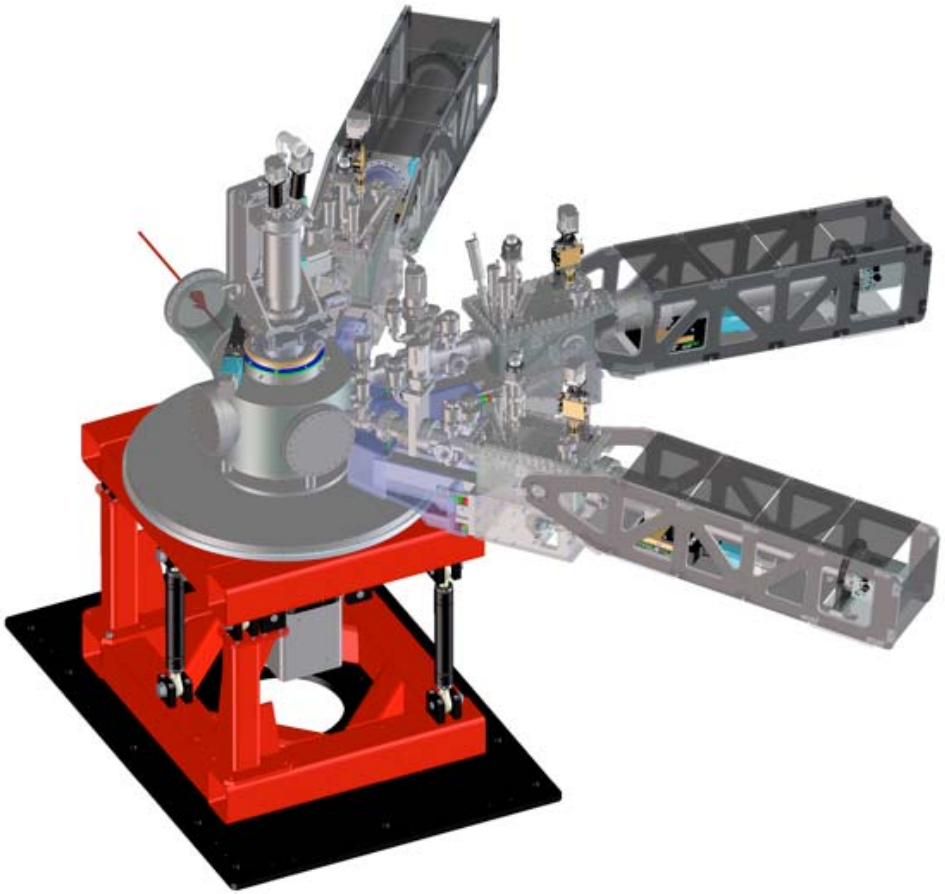

- Three spectrometers for first installation

Background Endstation Overview

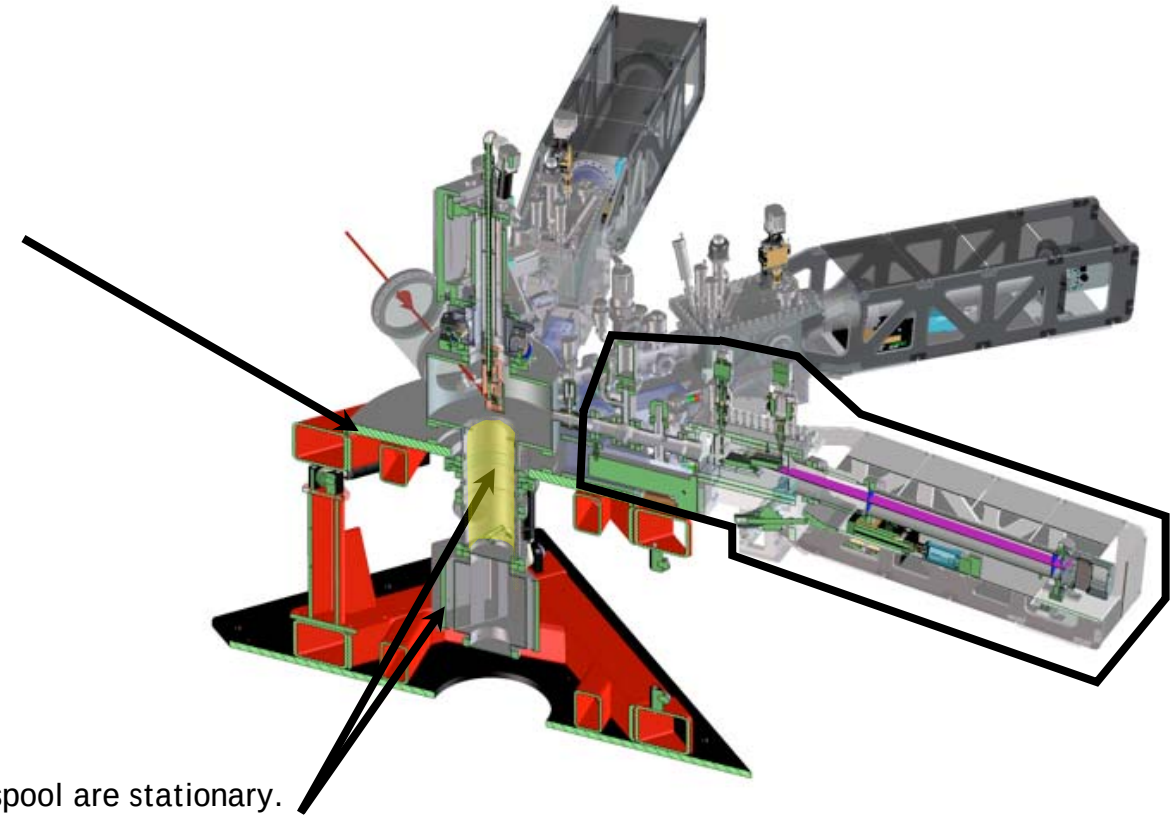

- Endstation will have capability to accommodate spectrometers on all 5 ports

Spectrometer Layout

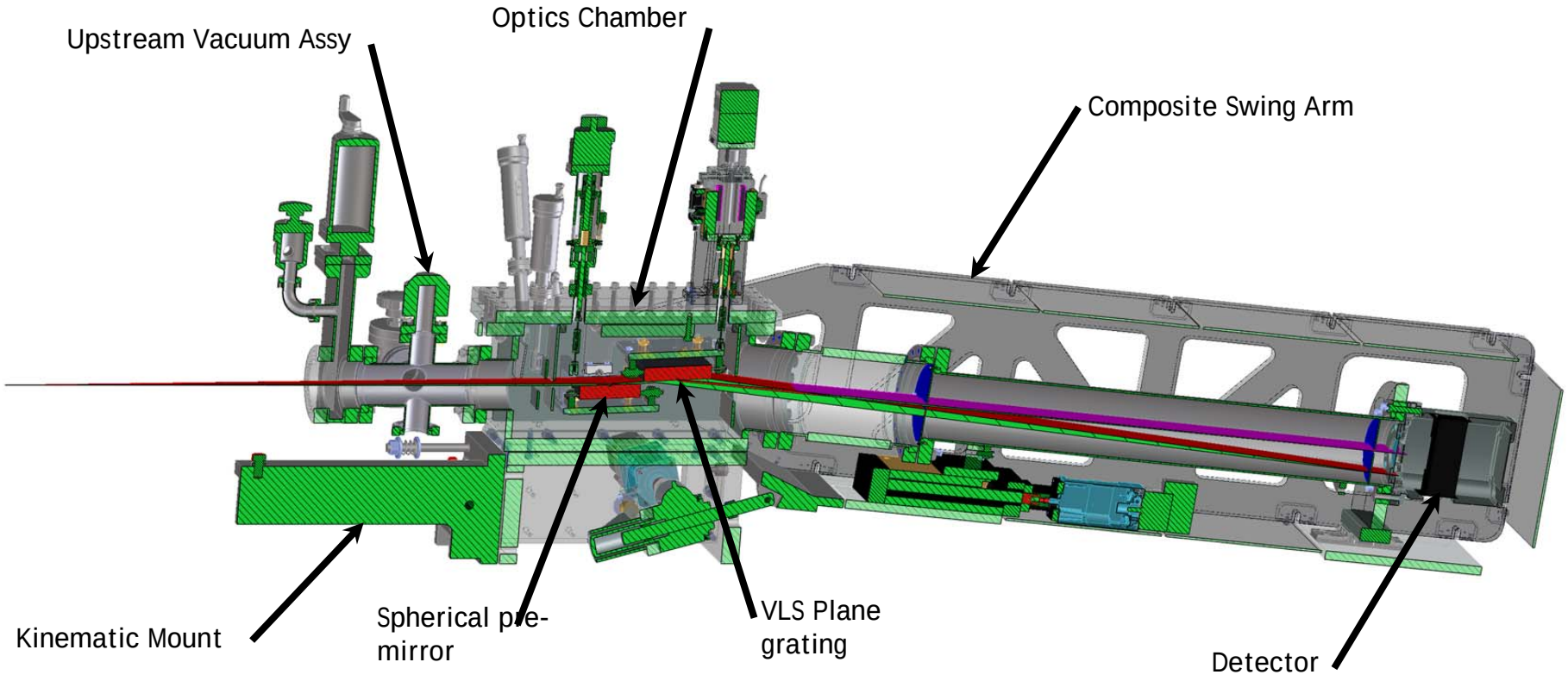

- Spectrometer Envelope Dimensions: 74” Length x 17” Width x 28” Height
- Horizontal acceptance 74 mr

Spectrometer Fundamentals

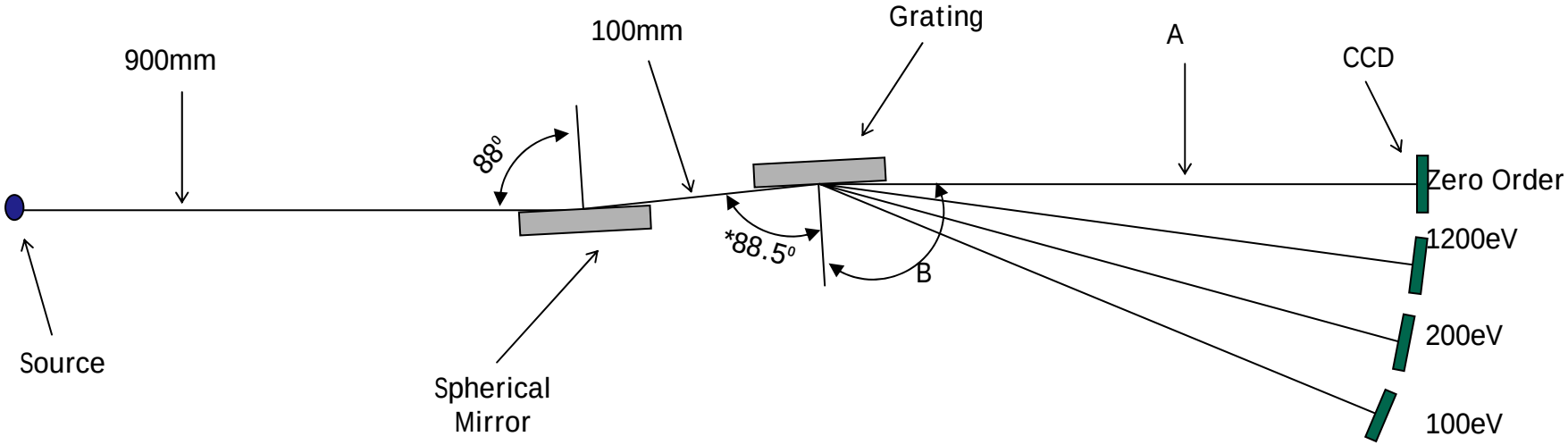

Beam	Dimension A (mm)	Angle B (°)
Zero Order	1100	88
1200eV	1100.9	85.7
200eV	1094	80
100eV	1086	75.91

* For Zero Order, grating angle is set to 88°

Spectrometer Full Beam Capacity

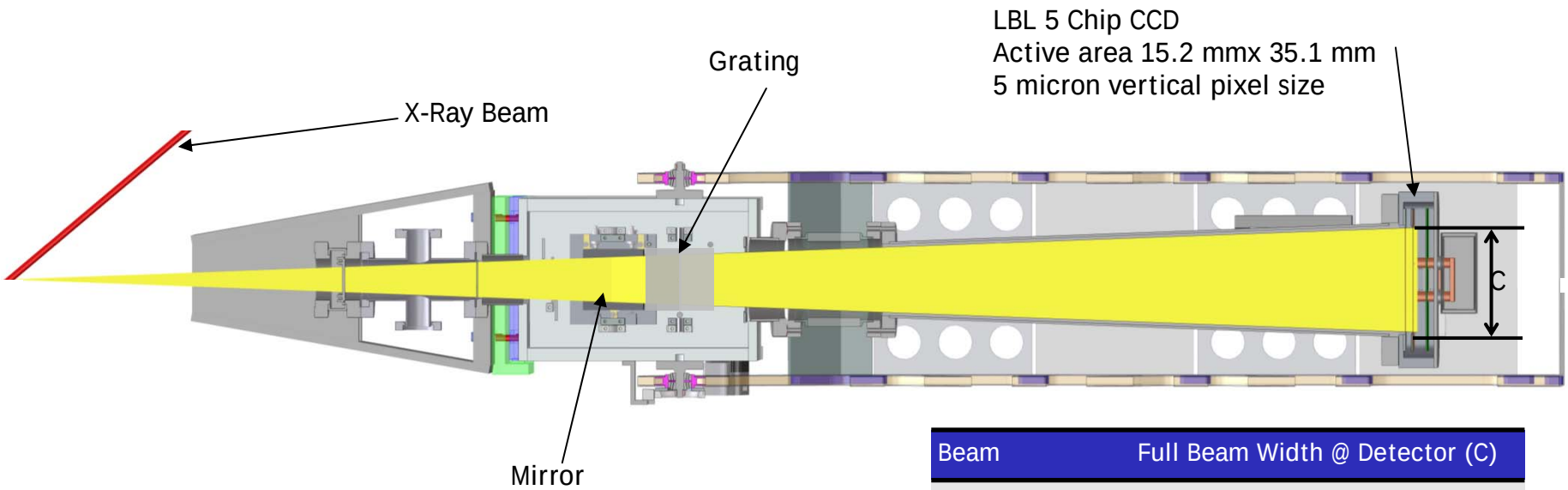

Beam	Full Beam Width @ Detector (C)
Zero Order	155.42
1200eV	155.44
200eV	154.28
100eV	152.74

- Full Beam Fan:
  - 74mrad Horizontal Divergence
    - Source to Grating Center = 1000mm
    - Grating Clear Aperture= 74mm

Background Endstation Overview

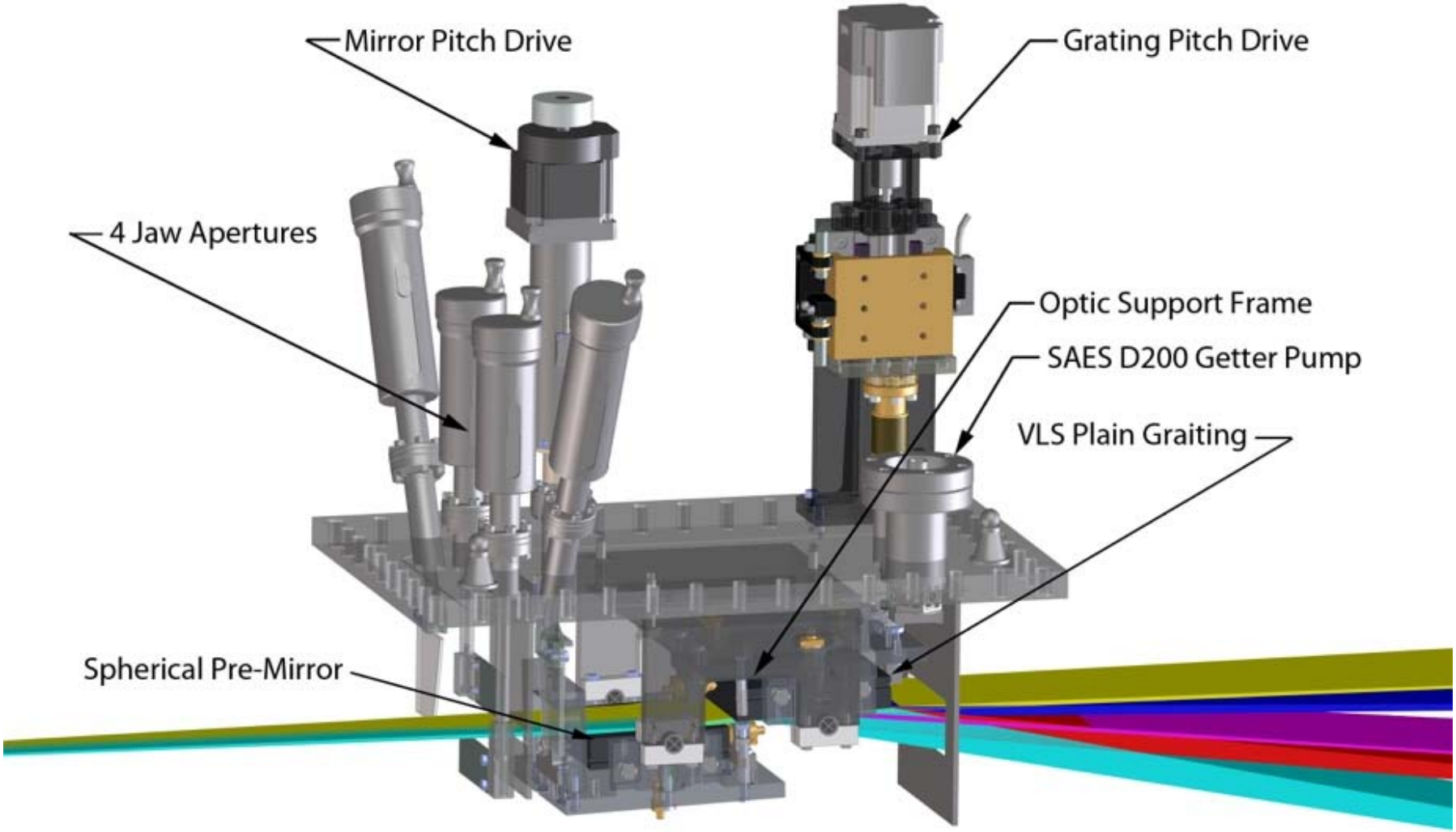

Based on Hettrick-Underwood layout, Aluminum wire seal based on Cornell process

Mirror & Grating Assembly

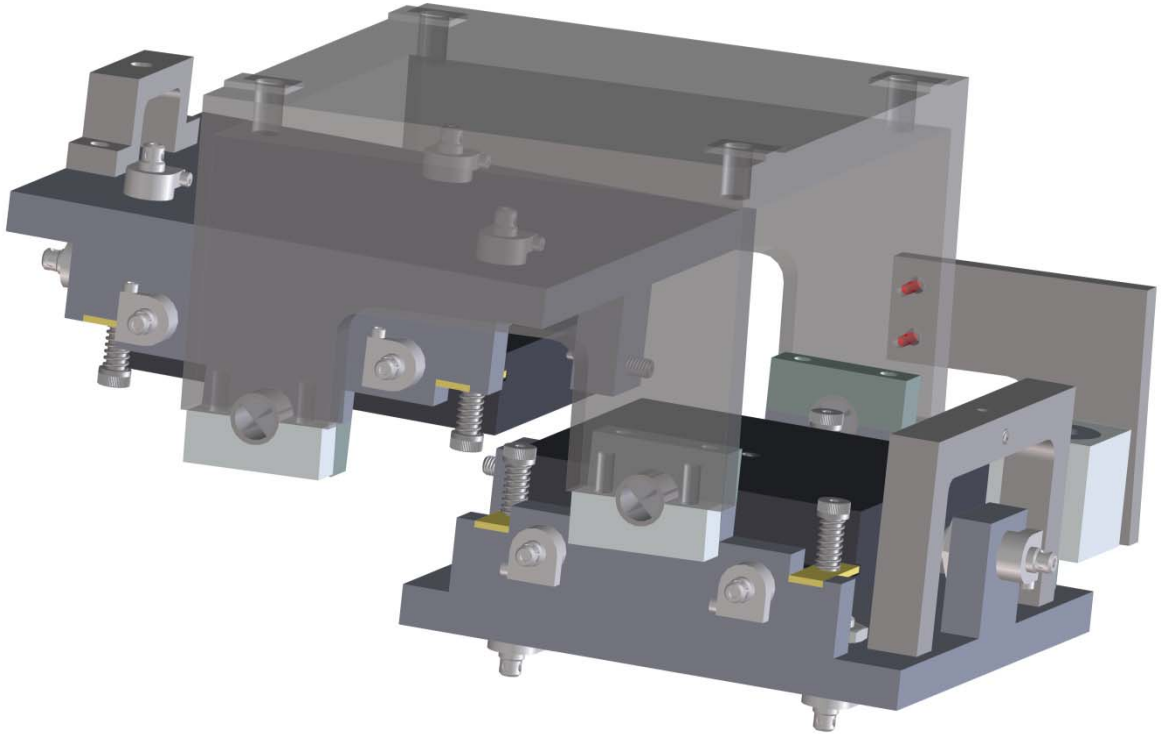

- Relative position set by solid aluminum mount fabricated & bolted to optics chamber lid.
  - Approximate Overall Dimensions: 5.5” L x 6.2” W x 3.4” H 25 micron
- 6 DOF adjustability on Mirror and Grating:
  - Siskiyou Adjustment Screws ¼”-100
  - Spring plungers & shoulder screws with spring provide reaction force
- Riverhawk Flex Pivot for pitch adjustment

Kinematic Mounting & Chamber Support

- Concept:
  - Interchange spectrometers and port locations without readjustment
- Interfaces with adjustable mount on bearing plate
  - 6 Precision surfaces (possibly flat)
- Positioning Requirements:
  - X – 500µm, Y- 200 µm, Z - 25 µm

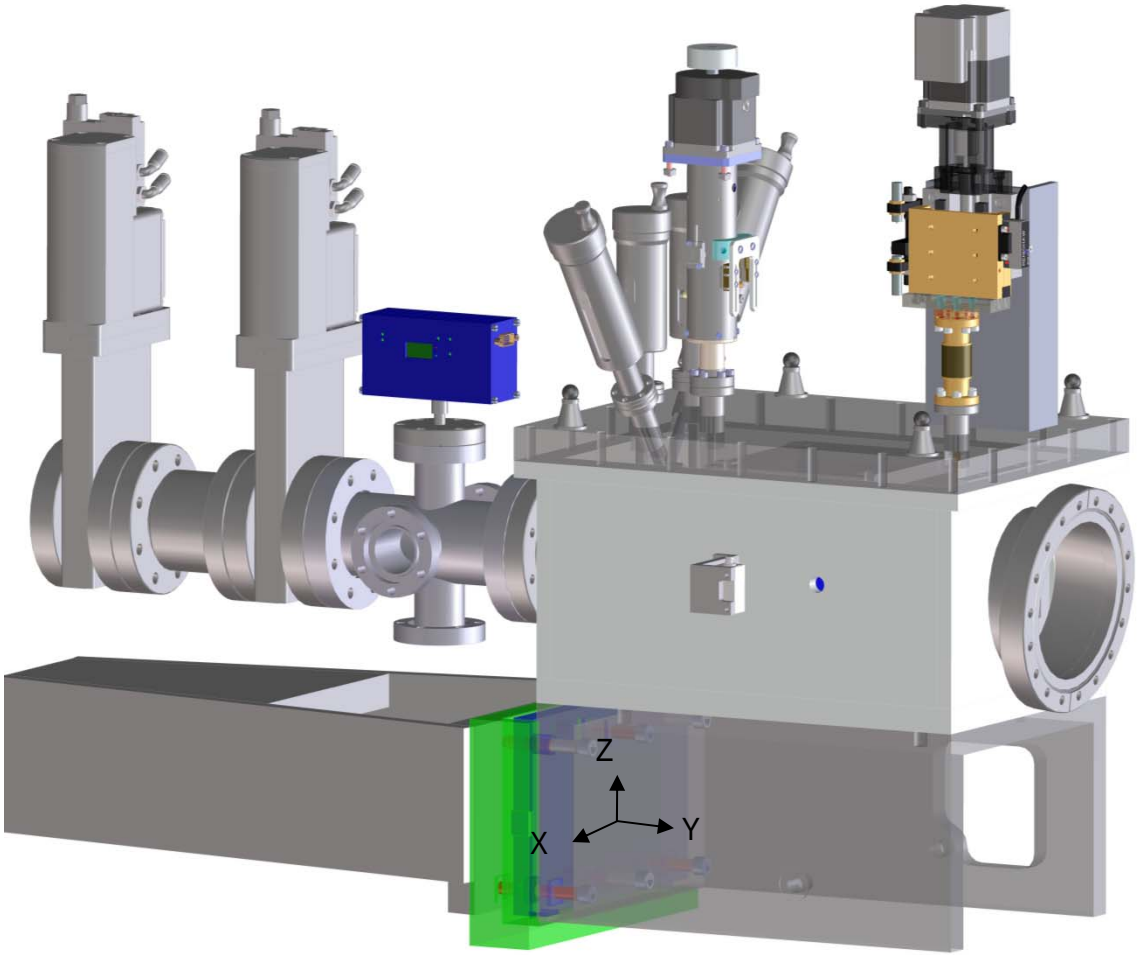

Flat Surfaces Based Mount

- 6 Flat surfaces provide interface between spectrometer and endstation mount
- Critical Mount Features:
  - Planar contact points (or one slightly Convex) (A-B-C and D-E)
  - Perpendicularity of planar surfaces (ex. A,B,C to D,E & F)
  - No individual surface adjustment, will require **precision machining**
- Clamping Force provided by 3 bolts

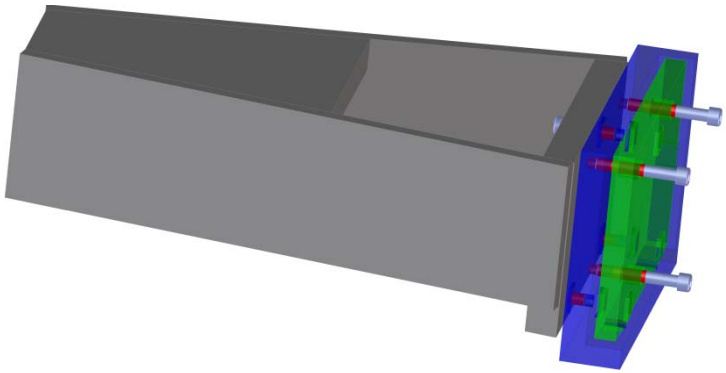

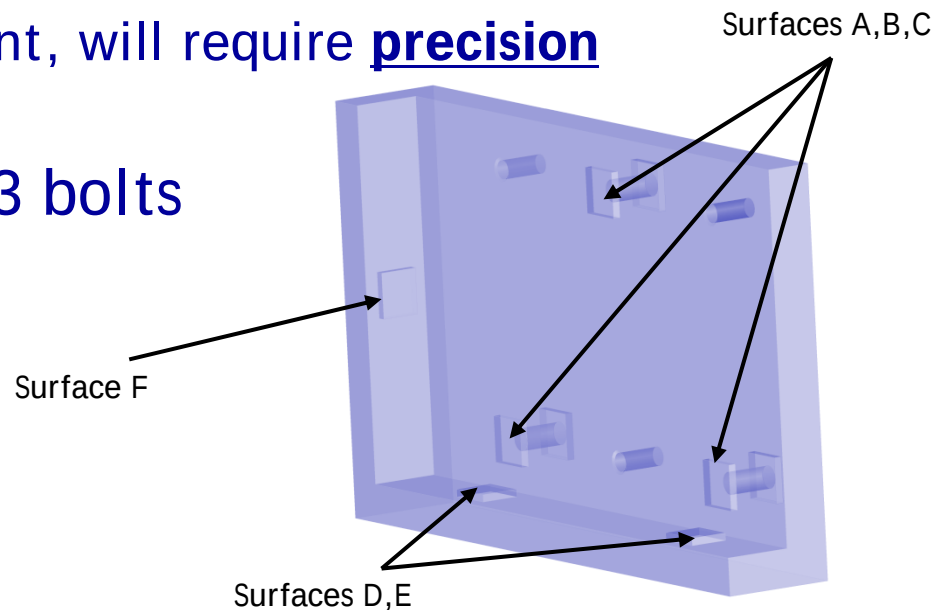

Spherolinder Based Kinematic Mount

- G2 Engineering 1” Spherolinder Assemblies

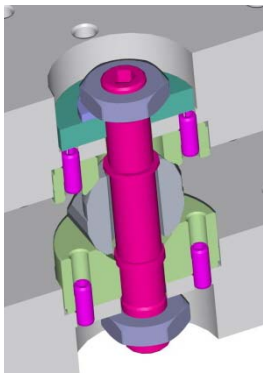

- The Spherolinder mount is derived from the classic 3-groove repeatable kinematic mount by replacing each mediating sphere with a Spherolinder - a solid object whose patented shape is a concentric combination of a half-sphere and a half-cylinder.
- The load capacity of a classic 3-groove mount is limited by the point contacts that are formed between the spheres and the V-grooves. When placed in the same grooves, the Spherolinder eliminates these single-point contacts, without degrading the kinematicity of the mount.
- Only 3 Spherolinder Assemblies are required since each constrains multiple DOF. It is important to note this causes coupling between DOF, all alignment adjustments will impact multiple DOF.

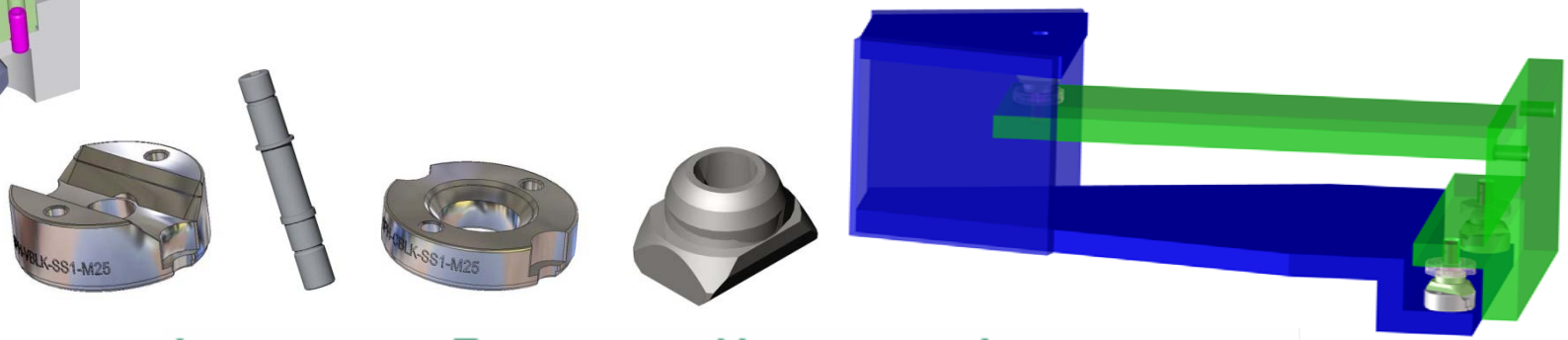

Kinematic Mounting & Chamber Support

- 6 point 3-2-1 mount hardened contact surfaces
- 6 Flat surfaces on endstation side
- 6 Convex (large radius) surfaces on the spectrometer side
- Both sides aligned to an artifact on the CMM

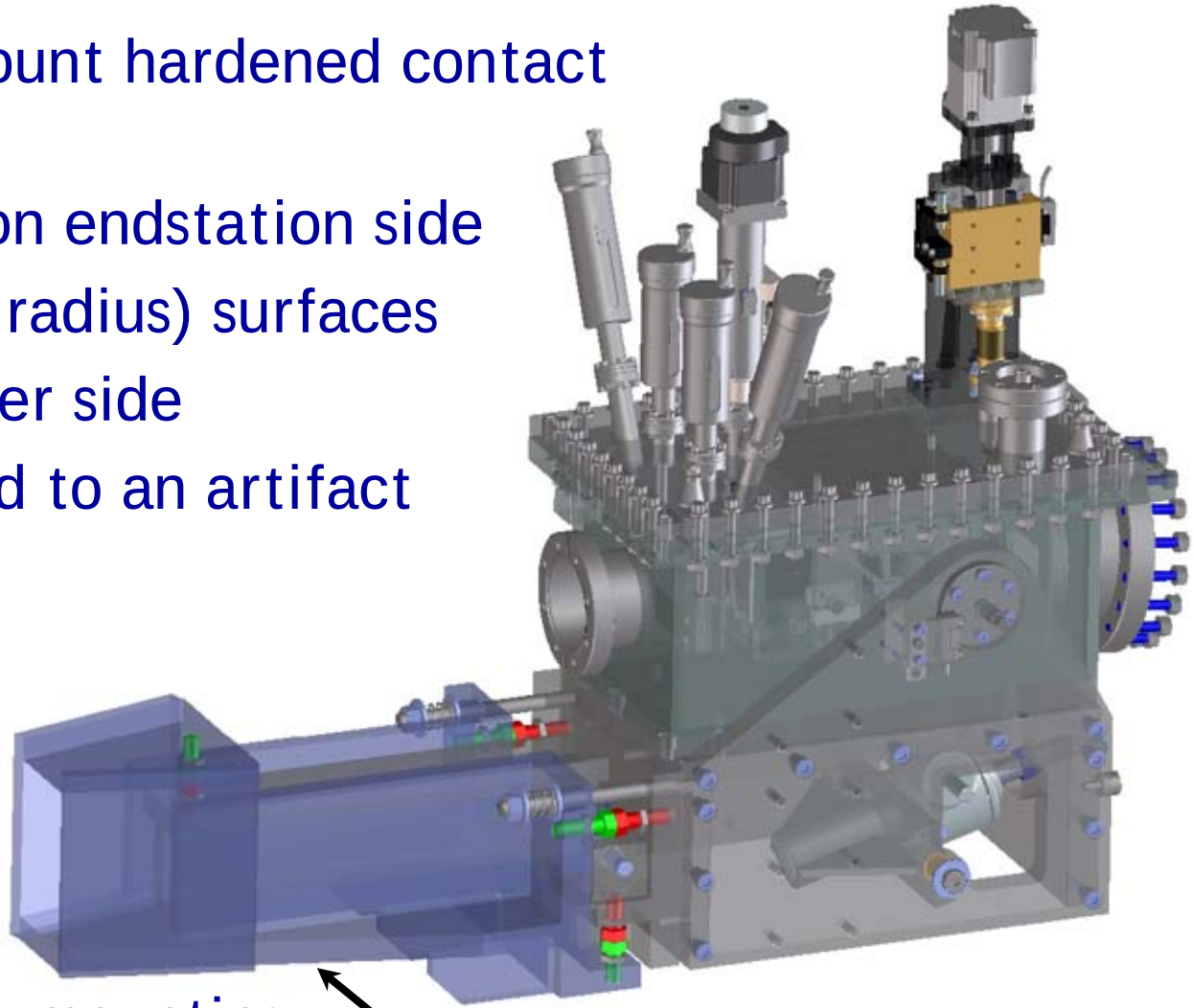

Endstation turntable mounting

Adjustable Bolt Concept

Spectrometer side (grey)
mounted to spectrometer chamber

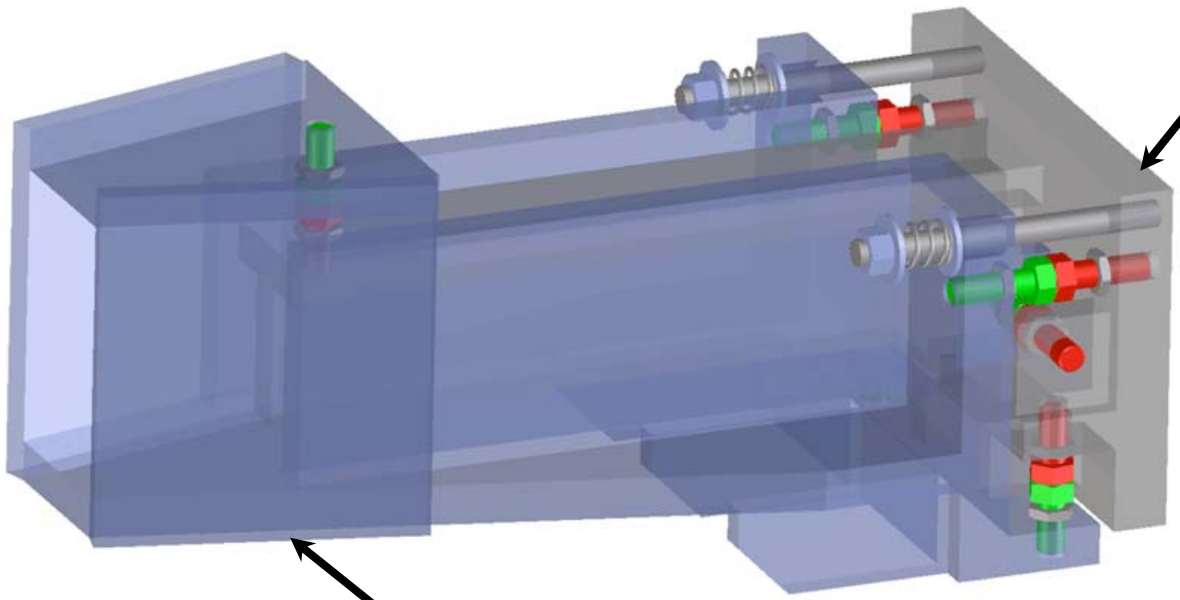

Endstation side (blue)
mounted to turn table

Adjustable Bolt Concept

- 6 point 3-2-1 mount - Spectrometer side

2 Horizontal along the beam direction

1 Horizontal perpendicular

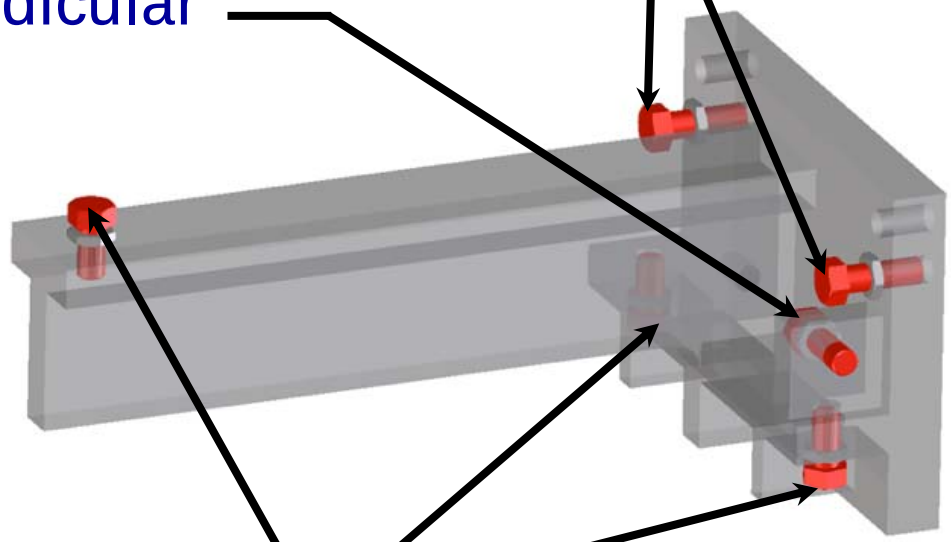

3 Vertical mounting points

One inverted to take advantage of the mass of the spectrometer for nesting load

Adjustable Bolt Concept

- 6 point 3-2-1 mount - Spectrometer side

2 Horizontal along the beam direction

1 Horizontal perpendicular

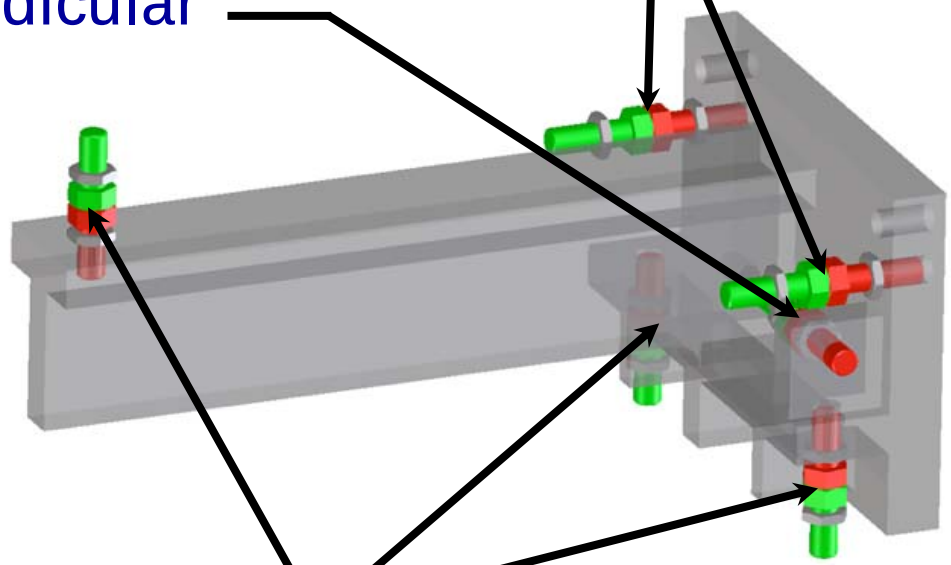

3 Vertical mounting points

One inverted to take advantage of the mass of the spectrometer for nesting load

Adjustable Bolt Concept

- 6 point 3-2-1 mount - Endstation side

2 Horizontal along the beam direction

1 Horizontal perpendicular

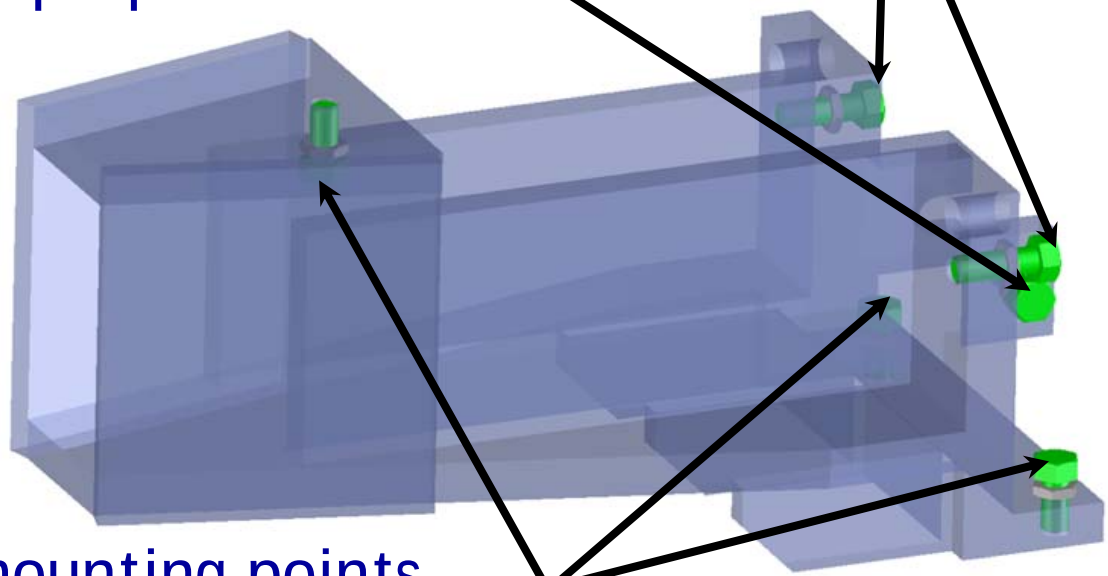

3 Vertical mounting points

One inverted to take advantage of the mass of the spectrometer for nesting load

Detector Positioning

Existing Swing Arms

Early concept

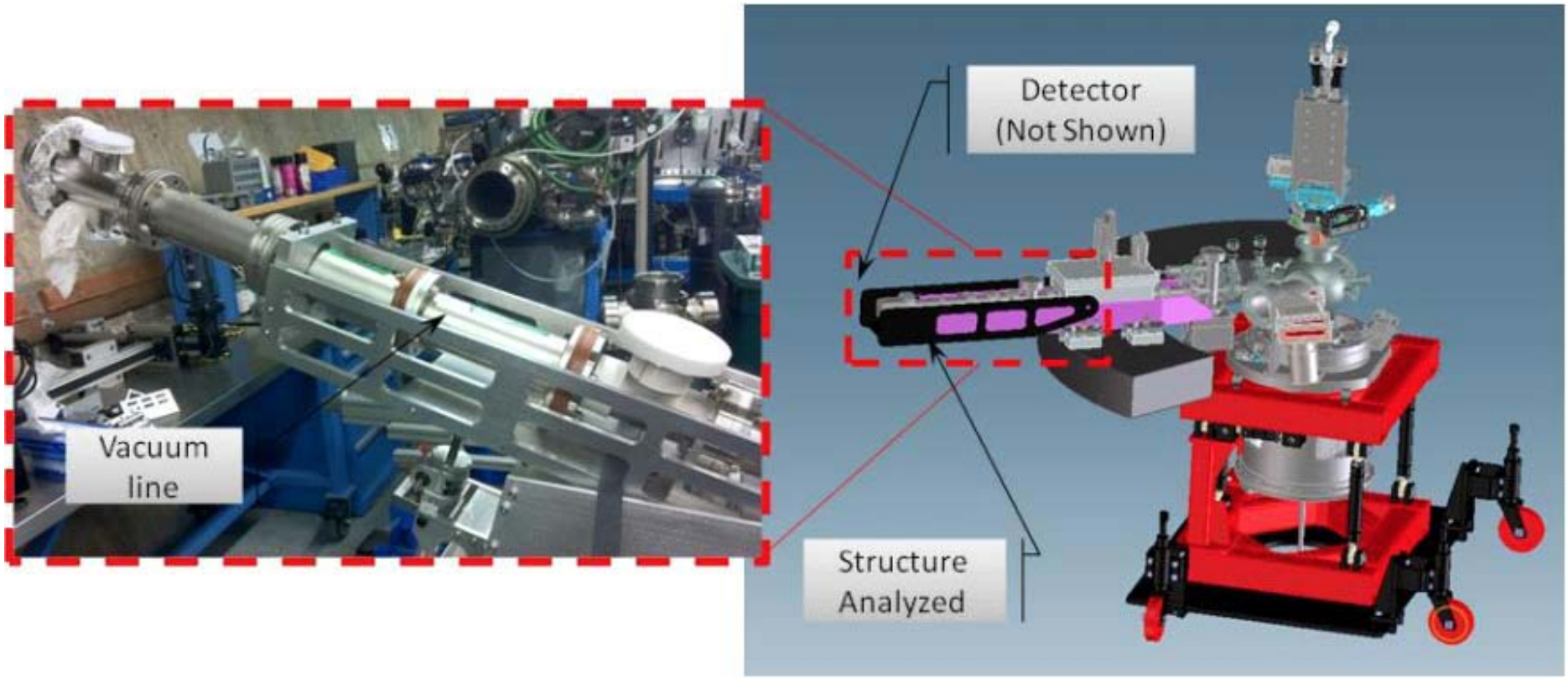

Detector Positioning

Composite Swing Arm

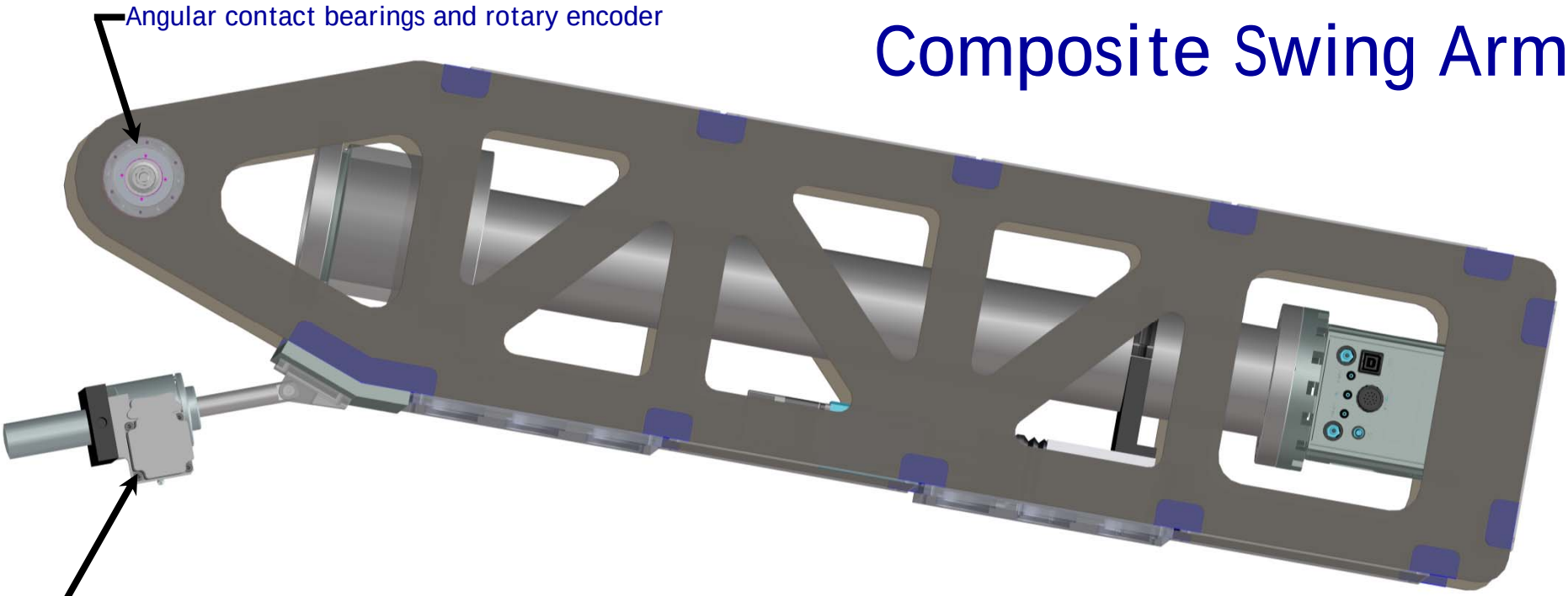

Worm Gear Screw Jack

–Load Capacity: 1,000lbs

–20 to 1 Gear Ratio

Motor: IMS Double Stack

Rotation Range: +/- 6°

- Sides Panels
  - CN60 1.2mm facesheets enclosing ½" honeycomb
- Top & Bottom Panels:
  - 2mm solid CN60 Panels
  - Aluminum Panels for Screw Jack, Linear Slide and Linear Stage Mount
- Modular Design:
  - Inserts & spacing to allow for interchangeable top & bottom panels

Swing Arm Analysis - Scope

- Material Trade
  - Composite vs. Aluminum
  - H/C vs. Solid laminate
  - Quasi-isotropic Layups
- Stiffness Check
  - Stability and Deflection
  - 1G Lateral and Vertical
  - Ground vibration response
- Strength Check
  - Interface loads
  - FE Global strains

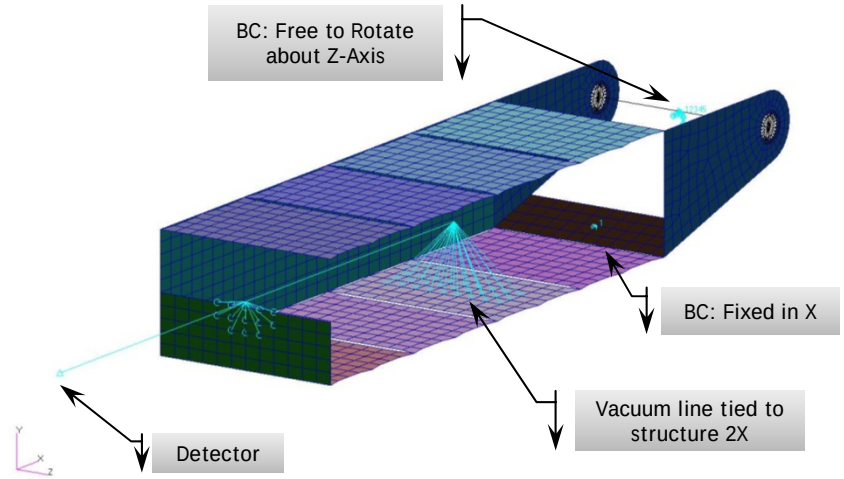

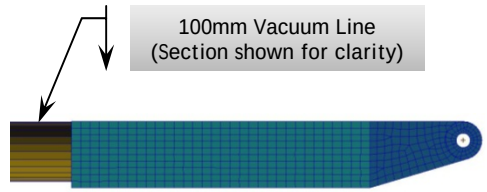

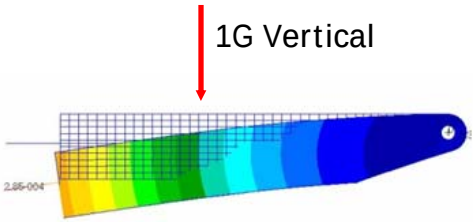

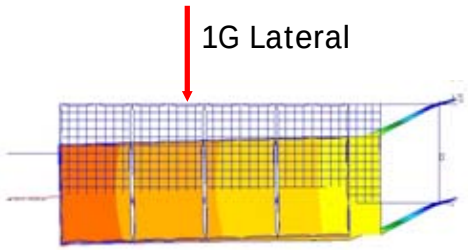

Swing Arm Concept

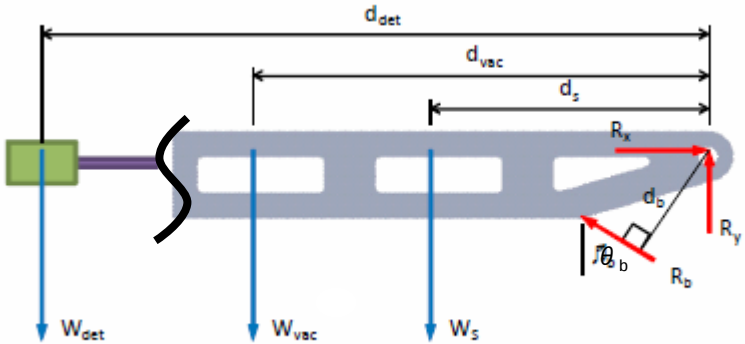

Free Body Diagram	
W_{det}	39.4lbf
d_{det}	48in
W_{vac}	25.4lbf
d_{vac}	36in
W_s	10lbf
d_s	25.6in
d_b	8.53in
θ_B	75.5
R_b	358.92lbf
R_y	-15.07lbf
R_x	347.49lbf
$R_{bearing}$	347.82lbf

- Material Trade
  - Composite vs. Aluminum
  - H/C vs. Solid laminate
  - Quasi-isotropic Layups
- Stiffness Check
  - Stability and Deflection
  - 1G Lateral and Vertical
  - Ground vibration response
- Strength Check
  - Interface loads
  - FE Global strains

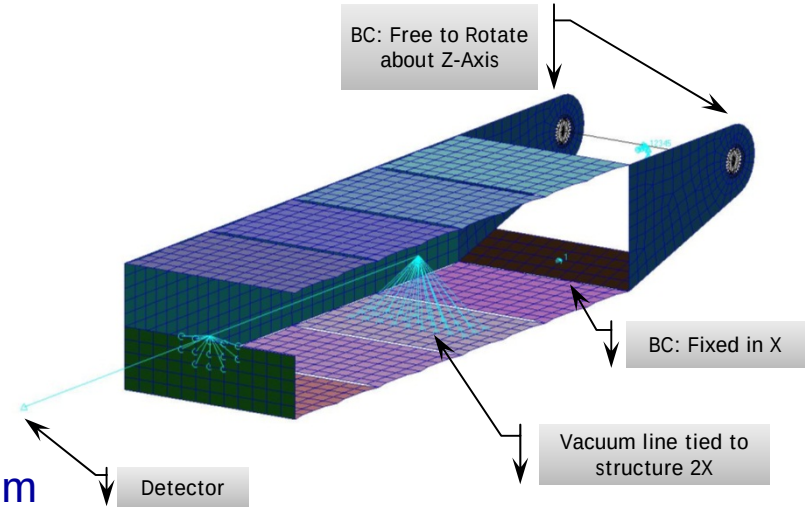

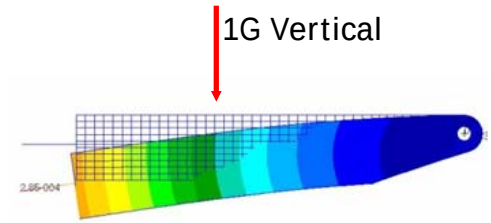

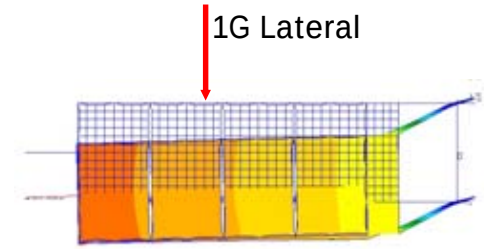

Swing Arm Analysis - Results

- Stability
  - ALS base level input
  - FE Model transmissibility
  - RMS δ Requirement, 1.44 μm
  - RMS δ Prediction, 0.07 μm

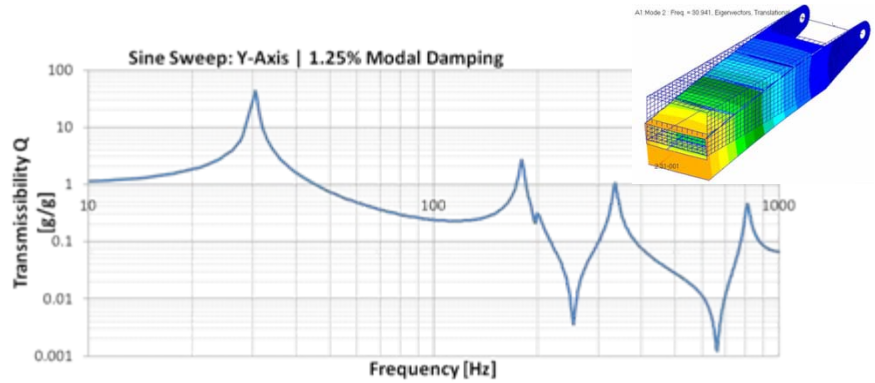

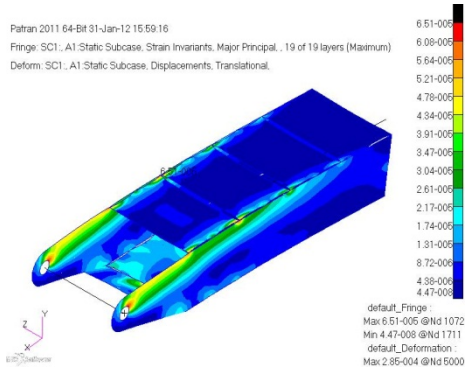

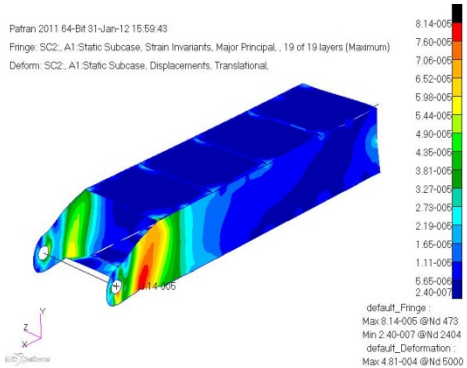

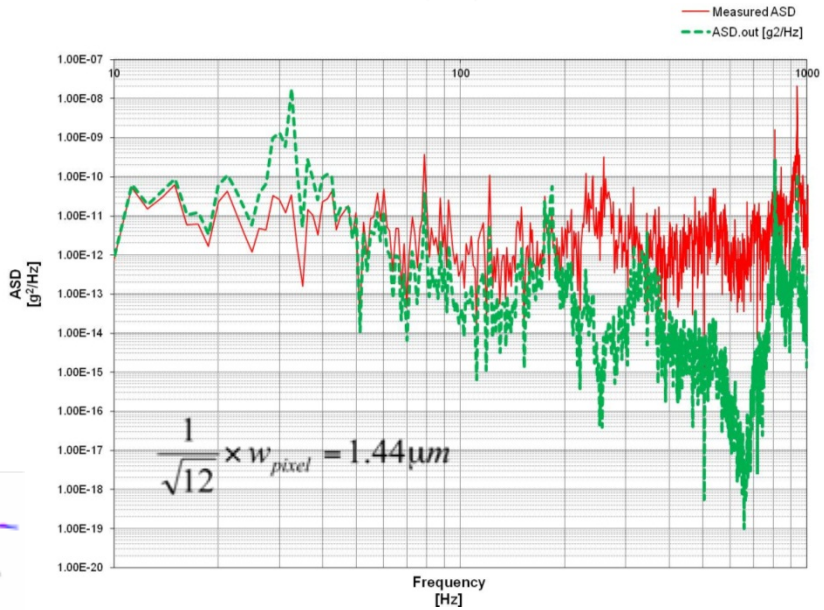

47 Hz

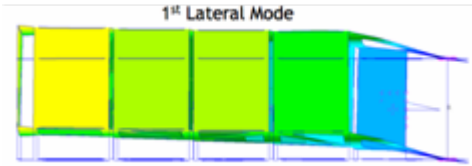

29.6 Hz

Summary

- Four spectrometers is now in production
- The detailed design for the endstation is now in process.

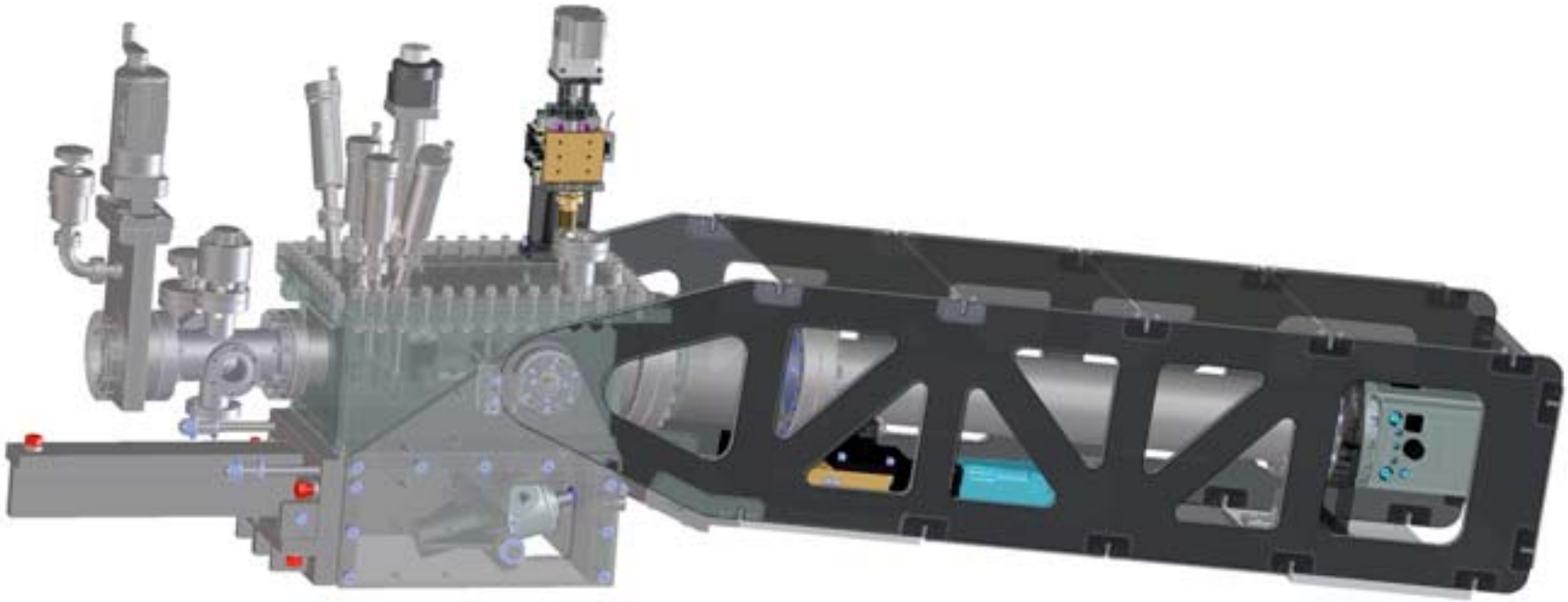

Thank You

- Dennis Baum, Adam Brown, Kelly Hanzel
  - Small Project Engineering
- Yi-De Chuang, Zahid Hussain, Jinghua Guo
  - ALS Scientific Support Group
- Eric Anderssen, Paul Perry, Joseph Silber
  - LBNL Composites Group
- Nicholas Kelez
  - SLAC

Optics Positioning Requirements

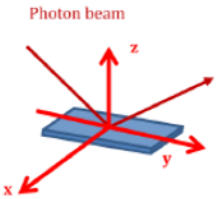

- Spherical Mirror Alignment & Adjustment

	Required Alignment Tolerance (Desired Value)	In Process Adjustment Required
X	500µm (100µm)	N/A
Y	500µm (100µm)	N/A
Z	**25µm (10µm)**	N/A
θ_x	0.01°	+/-0.5° (0.002° Resolution)
θ_y	0.05° (0.01°)	N/A
θ_z	N/A	N/A

- Grating Alignment & Adjustment

	Required Alignment Tolerance (Desired Value)	In Process Adjustment Required
X	500µm (200µm)	N/A
Y	200µm	N/A
Z	**25µm (10µm)**	N/A
θ_x	0.02°	+/-0.5° (0.002° Resolution)
θ_y	0.01°	N/A
θ_z	0.05°	N/A