Overview of engineering projects for the ESRF Upgrade beamlines

Philippe Marion

on behalf of the ESRF engineering groups

Contact: marion@esrf.fr

Outline:

A selection of outstanding mechanical engineering projects developed for the ESRF Upgrade Beamlines (UPBLs) …

(ESRF upgrade phase 1: 2009-2015)

- **Mechanical systems for large X-Ray mirrors *(presented by R. Baker this morning)***
- **Mechanical devices for Compound Refractive Lenses (CRLs)**
- **Nano end station projects & Compact Kirkpatrick Baez (KB) systems**
- **Large experimental devices: UPBL7 Spectrometer, UPBL6 X-ray Raman spectrometer, UPBL9a SAXS tube**

Compound Refractive Lenses & associated mechanics

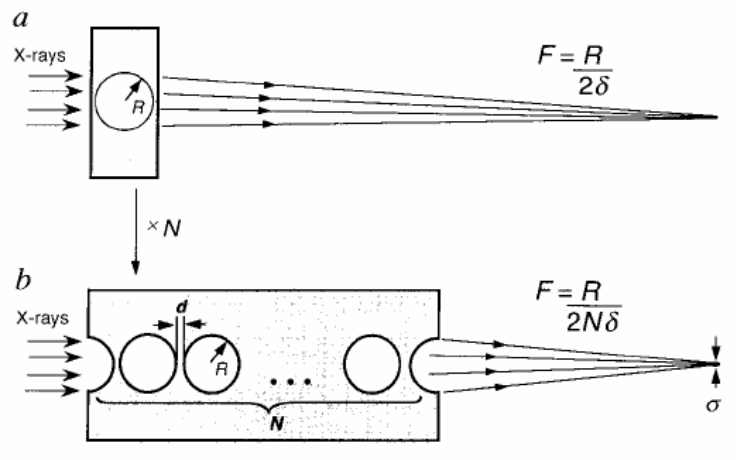

NATURE · VOL 384 · 7 NOVEMBER 1996

A compound refractive lens for focusing high-energy X-rays

A. Snigirev*, V. Kohn†, I. Snigireva* & B. Lengeler*‡

* European Synchrotron Radiation Facility, BP220, F-38043 Grenoble Cedex, France
† Kurchatov, I. V., Institute of Atomic Energy, 123182 Moscow, Russia

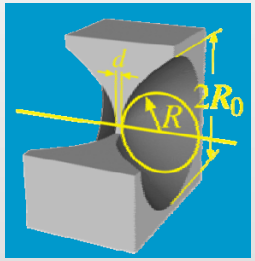

Parabolic Compound Refractive Lenses

Collaboration with B.Lengeler
RXOPTICS Aachen, Germany

CRLs are particularly well adapted at medium / high energy

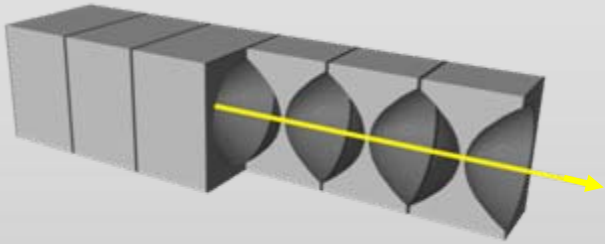

$$F = \frac{R}{2N\delta}$$

$$\delta = f(E)$$

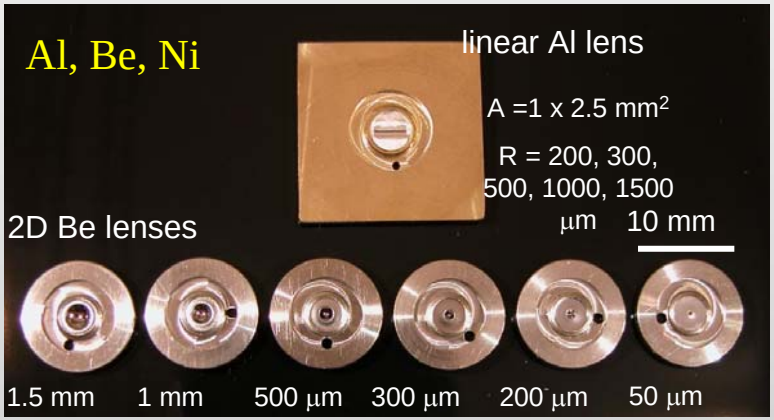

The number of lenses (up to 200 lenses) must be changed when E and F varies

=> Transfocator = mechanical system for inserting variable numbers of lenses in the beam

Use of CRLs in UPBLs optics schemes

Compound Refractive Lenses will be used by many ESRF Upgrade Beamlines …

Upgrade Beamline		E (keV)	White beam CRLs/transfocator	Monochr. beam CRLs/transfocator	Sample focusing CRLs
UPBL1	Diffr. imaging for nano-analysis	4-55		1 Tr.	1 set
UPBL2	High energy	50-150	1 Tr.	2 Tr.	
UPBL4	NINA (nano)	5-70			
UPBL6	IXS - XRE	5-20			
UPBL7	RIXS-XMCD	0.3-2.5			
UPBL9a	TRUSAXS	12		1 Tr.	
UPBL9b	Time resolved	10-60		1 Tr.?	
UPBL10	MASSIF (MX)	5-20	1 set	2 Tr.	
UPBL11	TEXAS	7-20			
ID10 refurb.			1 Tr.	1 Tr.	1 set
ID19 refurb.		10-150	1 Tr.		

CRLs / associated mechanics / transfocators

- **CRLs are relatively easy to adjust and positioning precision is generally less demanding than for reflective optics (mirrors) :**

  Radial alignment : misalignment = 10 to 50μm (10-20% of lens radius) acceptable in most cases

  •Engineering developments underway for specific applications:

  > More precise alignment strategies when needed

  > Enhanced cooling (white beam applications)

Transfocators developments

Transfocators enable to insert in/out of the beam a defined number of lenses

pneumatic actuation

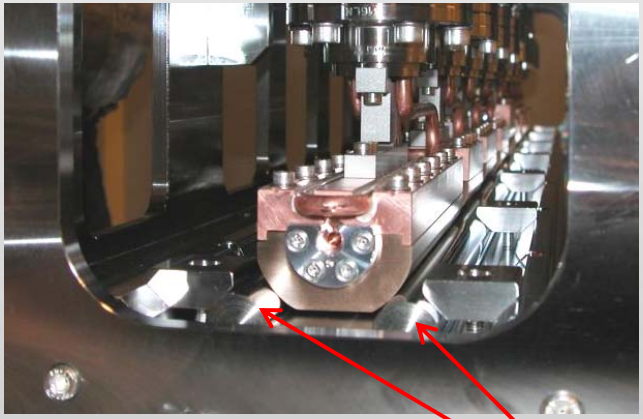

alignment of lenses cartridges by contact on straight reference bars
alignment: 10-50μm

Optics responsible: A.Snigirev

Mechanical eng. coordinator: M. Mattenet

Transfocators

Generic designs of transfocators developed …

White beam transfocator watercooled

9 actuators

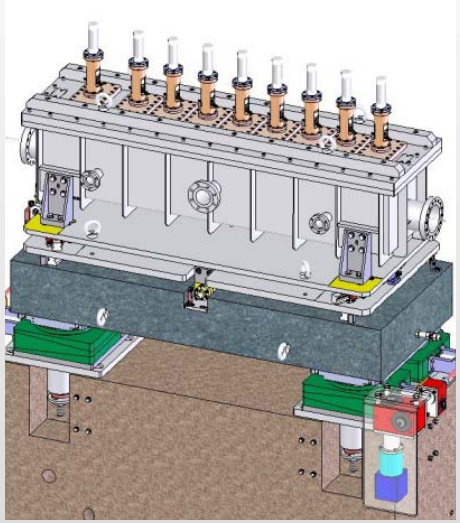

Monochr. beam transfocator

UHV

9 actuators

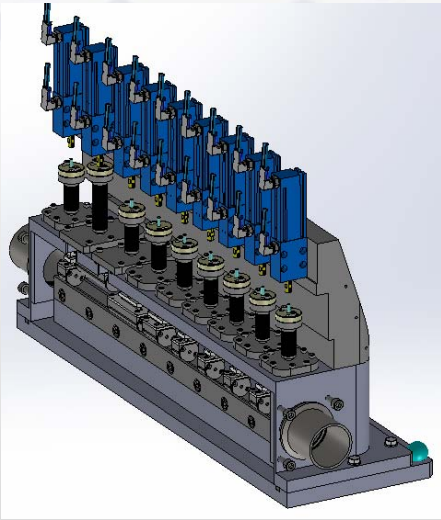

Monochr. beam transfocator

Compact (lg 180mm), non UHV

6 actuators

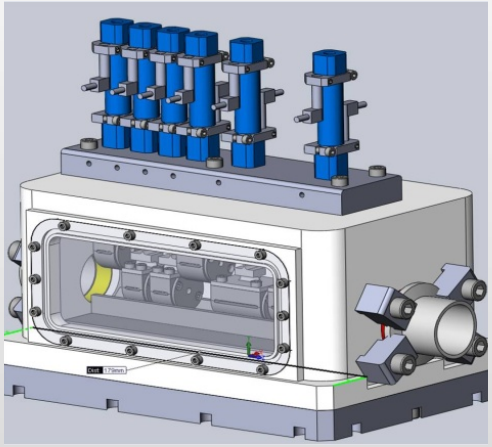

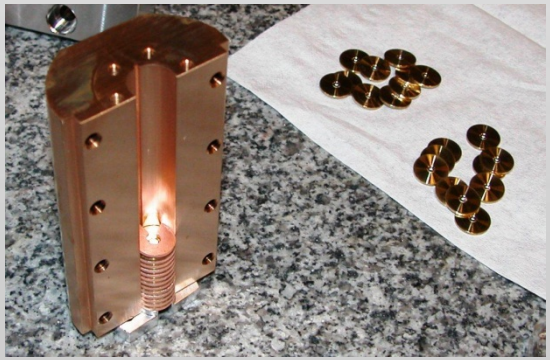

A selection of outstanding mechanical engineering projects developed for the ESRF Upgrade Beamlines (UPBLs) …

(ESRF upgrade phase 1: 2009-2015)

- Mechanical systems for large X-Ray mirrors
- Mechanical devices for Compound Refractive Lenses (CRLs)
- **Nano end station projects & Compact Kirkpatrick Baez (KB) systems**
- Large experimental devices: UPBL7 Spectrometer, UPBL6 X-ray Raman spectrometer, UPBL9a SAXS tube

Nano stations and compact KB developments

An illustration of ESRF nano end station developments will be presented by Francois Villar this afternoon (*"Sample Stage Positioning for the Nano-imaging Branch of UPBL4-NINA"*)

- Design choices are intended to master the positioning errors (kinematic design, symetric design, reduce heat sources…)
- Online metrology in all d.o.f. is a key feature

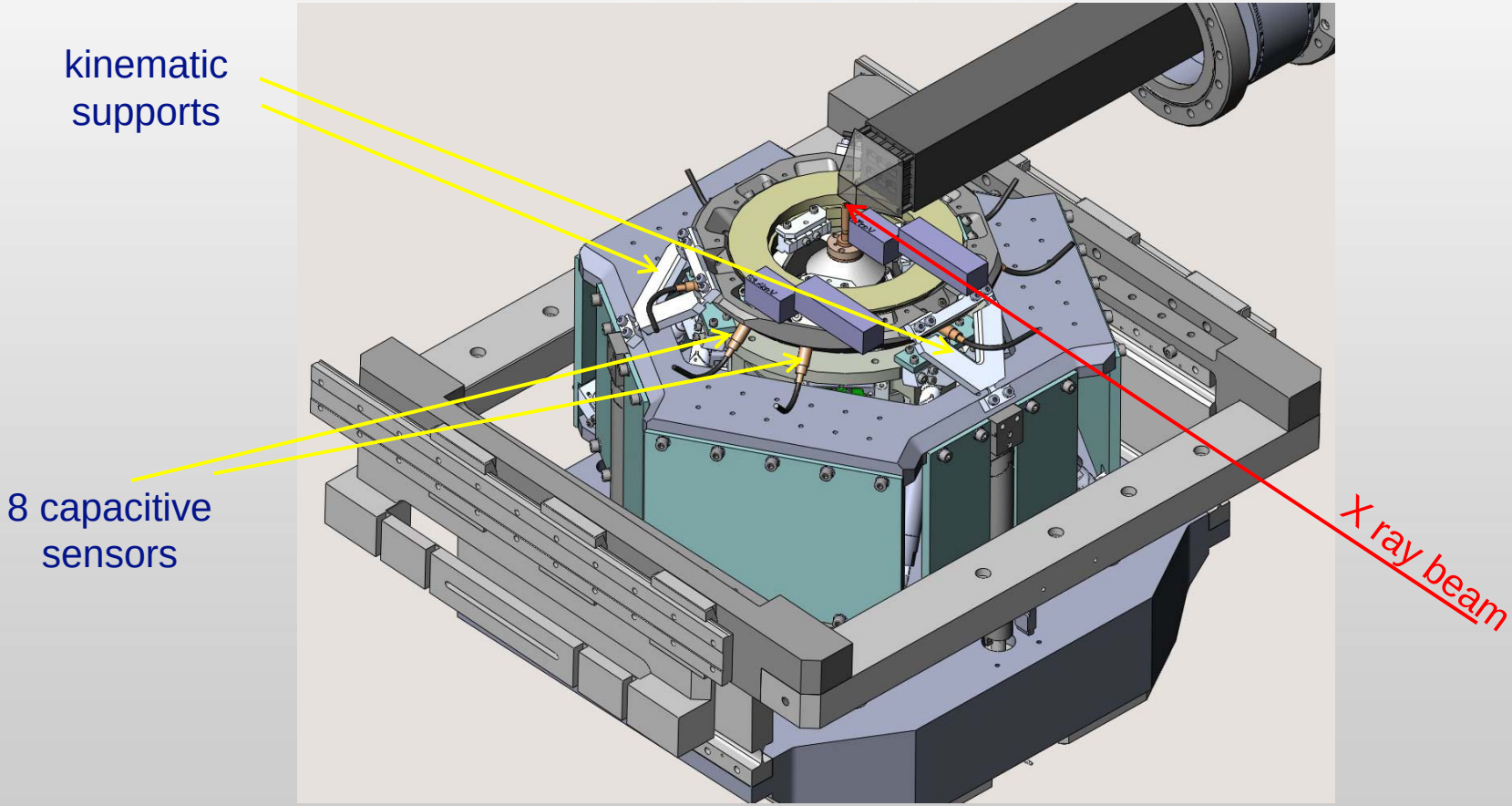

Nano stations and compact KB developments

Organisation of Nano developments: The design of a Nano end station requires a very close collaboration between ….

Mechanical engineers
kinematic/deterministic design,
vibration & thermal stability

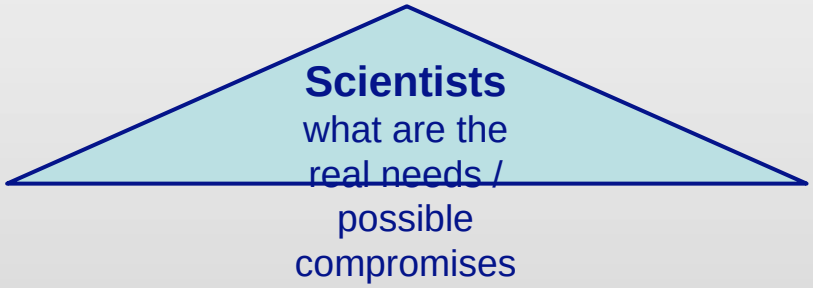

Metrology engineers
online metrology
systems, extensive
calibration phase

Control engineers
real time corrections

It is essential to involve in these nano projects control engineers with the required specific skills is essential

Compact KB systems for nano- focusing

Mechanical engineer: R. Baker **Optics engineer: R. Barrett**

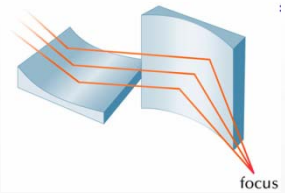

Compact Kirkpatrick Baez systems are being developped for the UPBL4 NI nano end station.

Focus size: 15 x 15nm

Two KBs for two different energies, in a very limited space.

This development will be based on the compact KB systems recently developped and tested at ESRF ID13, presented below.

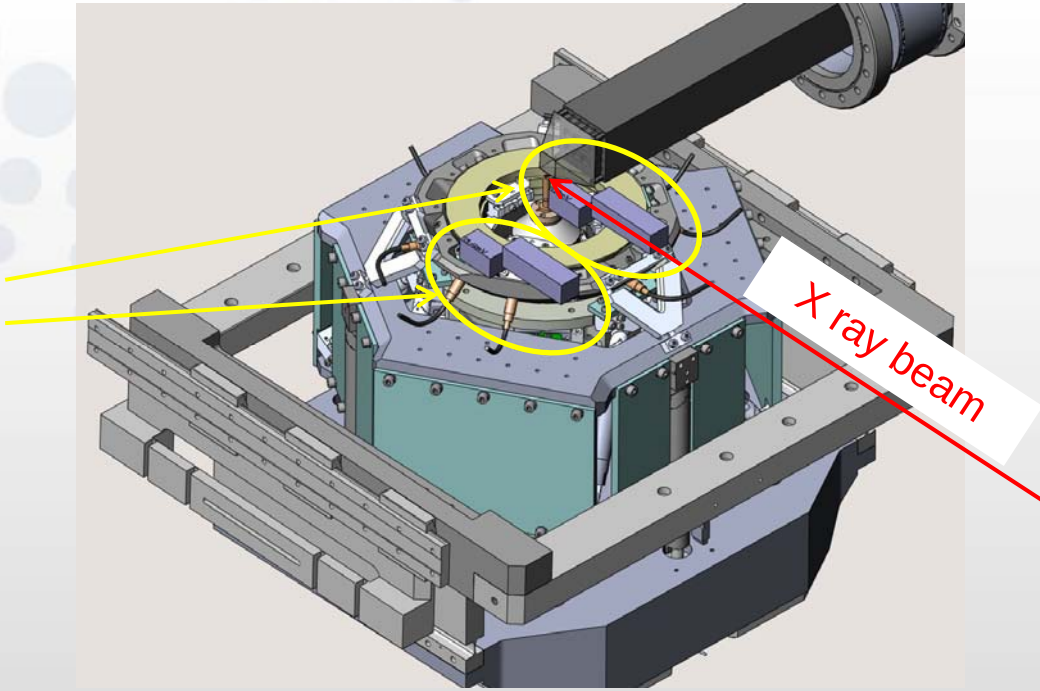

ID13 Compact KB System

- **The system is designed to focus hard X-rays (up to 13keV) to achieve a focal spot size less than 100 x 100 nm^2.**
- **A compact Kirkpatrick Baez focusing mirror system with a length along the beam axis of 75 mm.**
- **The focus spot is situated 24 mm downstream of the end of the KB system**
- **Horizontally focusing mirror only 20mm long**

  => very limited space

Compact KB systems for nano- focusing

ID13 Compact KB System (continued)

- Local radius of curvature varies between 27 and 12 m over the 20 mm length of the horizontally focusing mirror.
- Spherically polished superpolished substrates: profile coated with Pt to give elliptical figure (APS optics group)

	Vertical Focusing (VF)	Horizontal Focusing (HF)
Entrance arm, p [m]	98	98
Exit arm, q [mm]	77.5	37
Incidence angle, [mrad]	3.9	
Accepted aperture [µm]	135	78
Target slope error [µrad rms]	0.27	0.5

Compact KB systems for nano- focusing

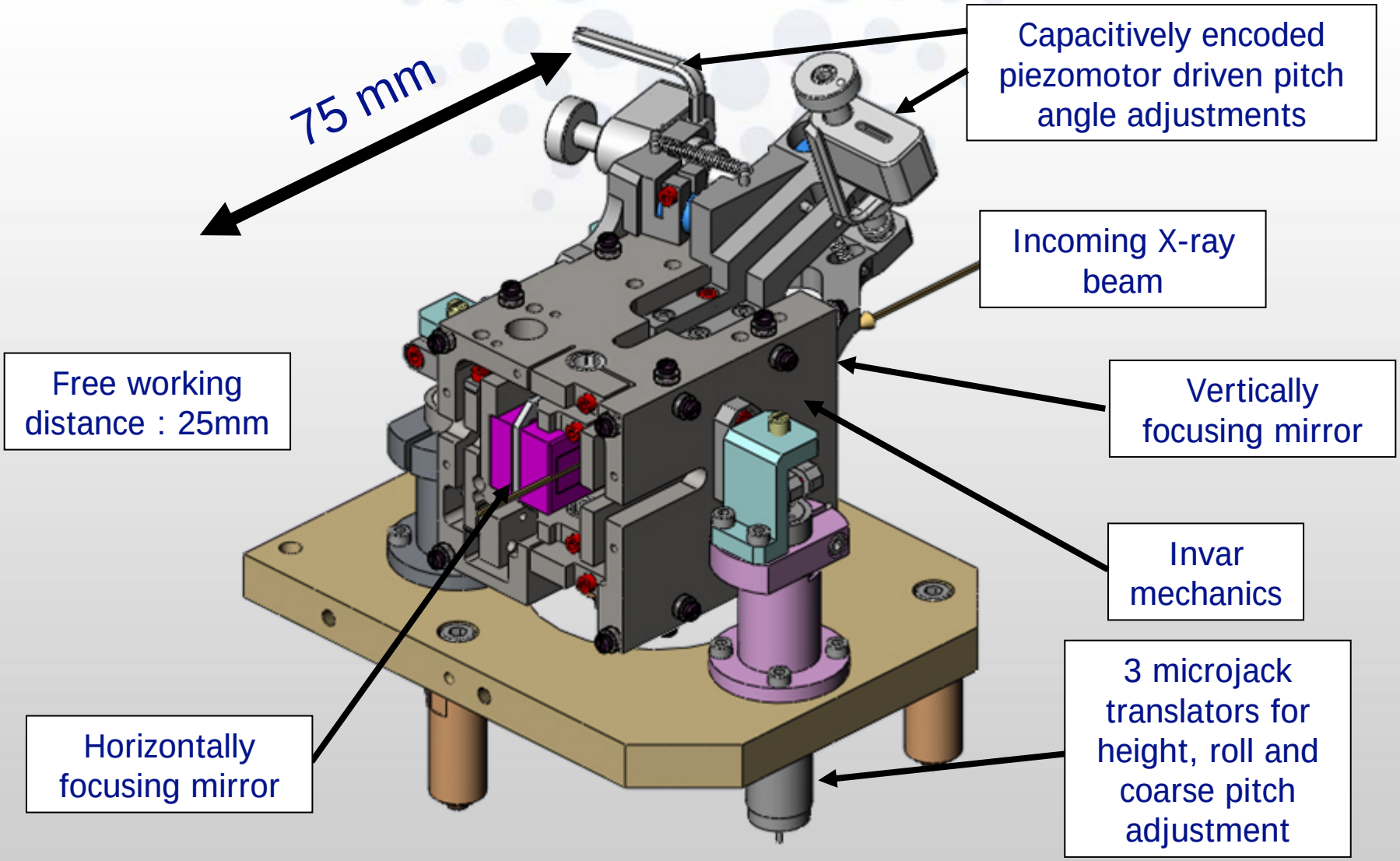

Compact KB systems for nano- focusing

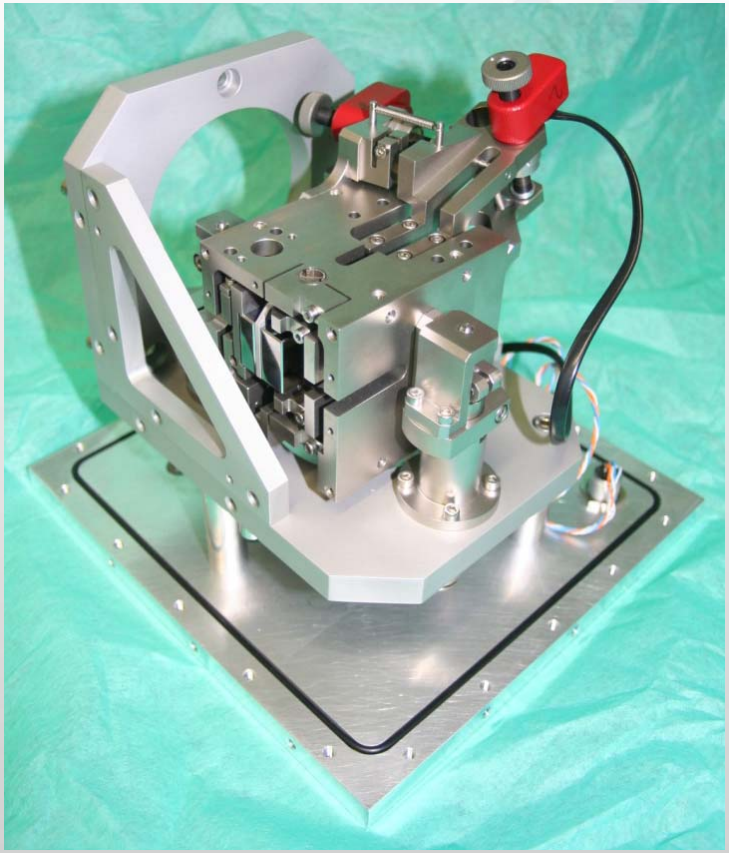

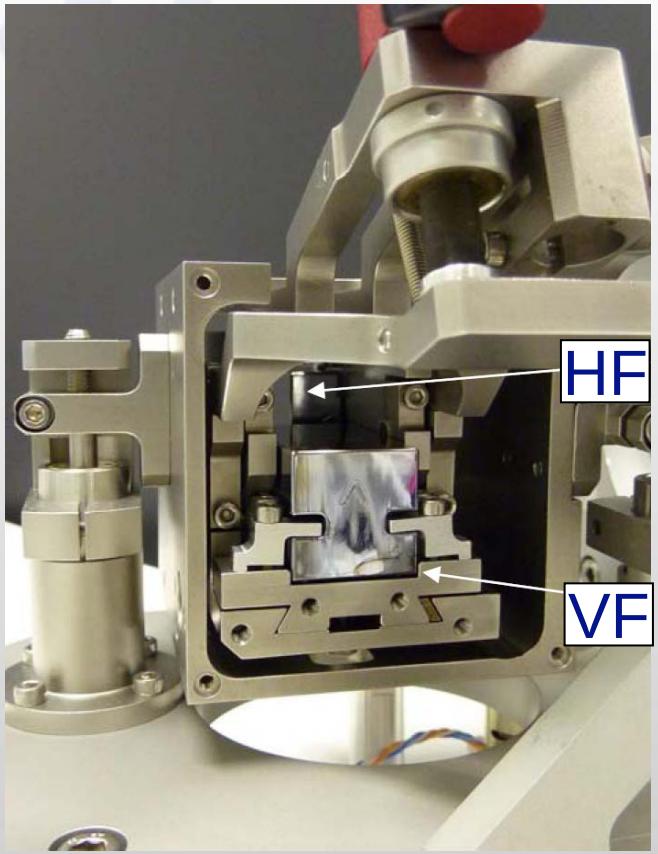

A selection of outstanding mechanical engineering projects developed for the ESRF Upgrade Beamlines (UPBLs) …

(ESRF upgrade phase 1: 2009-2015)

- **Mechanical systems for large X-Ray mirrors**
- **Mechanical devices for Compound Refractive Lenses (CRLs)**
- **Nano end station projects & Compact Kirkpatrick Baez (KB) systems**
- **Large experimental devices: UPBL7 Spectrometer, UPBL6 X-ray Raman spectrometer, UPBL9a SAXS tube**

The UPBL7 RIXS spectrometer (1/3)

UPBL7: soft X-ray beamline (300 to 2500 eV) - 2 end stations RIXS and XMCD
RIXS (resonant inelastic X-ray scattering) spectrometer designed for high energy resolution (25meV at 900eV)

Principle: the energy spectrum emitted by the sample is dispersed by the grating in the vertical plane . Each energy exits at a different θy angle. The vertical and horizontal motions of the detector allow to record the energy window of interest in its focal plane. The collimating mirror increases the collected flux of radiation.

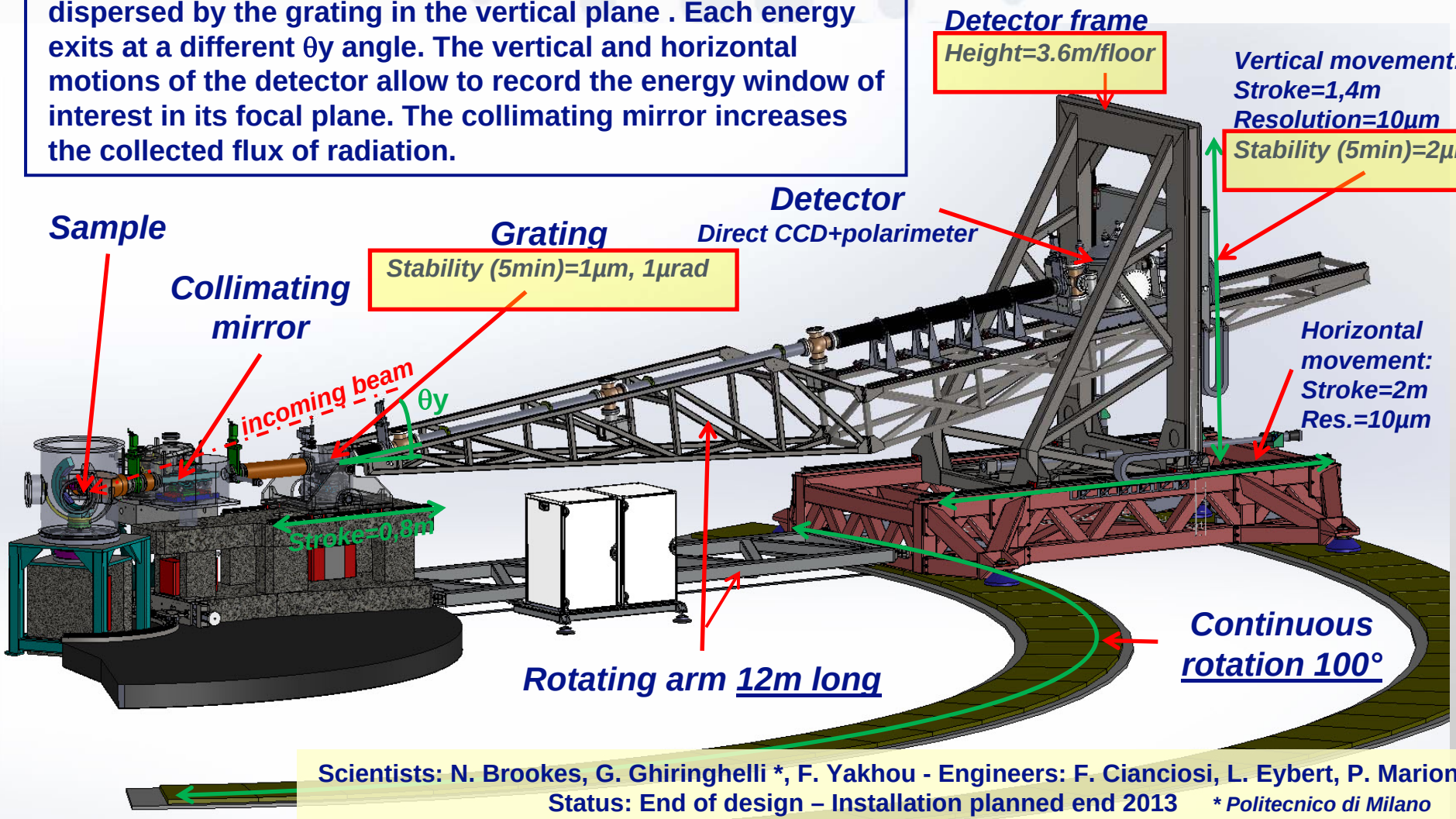

Scientists: N. Brookes, G. Ghiringhelli *, F. Yakhou - Engineers: F. Cianciosi, L. Eybert, P. Marion
Status: End of design – Installation planned end 2013 ** Politecnico di Milano*

The UPBL7 RIXS spectrometer (2/3)

How to ensure high stability on such large structures ?

- Temperature stability of exp. room: +/- 0.3 ^{0} C
- High stiffness airpads on granite / tiles floor (2 versions)
- Optimisation by careful FEA calculations of the design of large support frames. Selection of stiff translation components

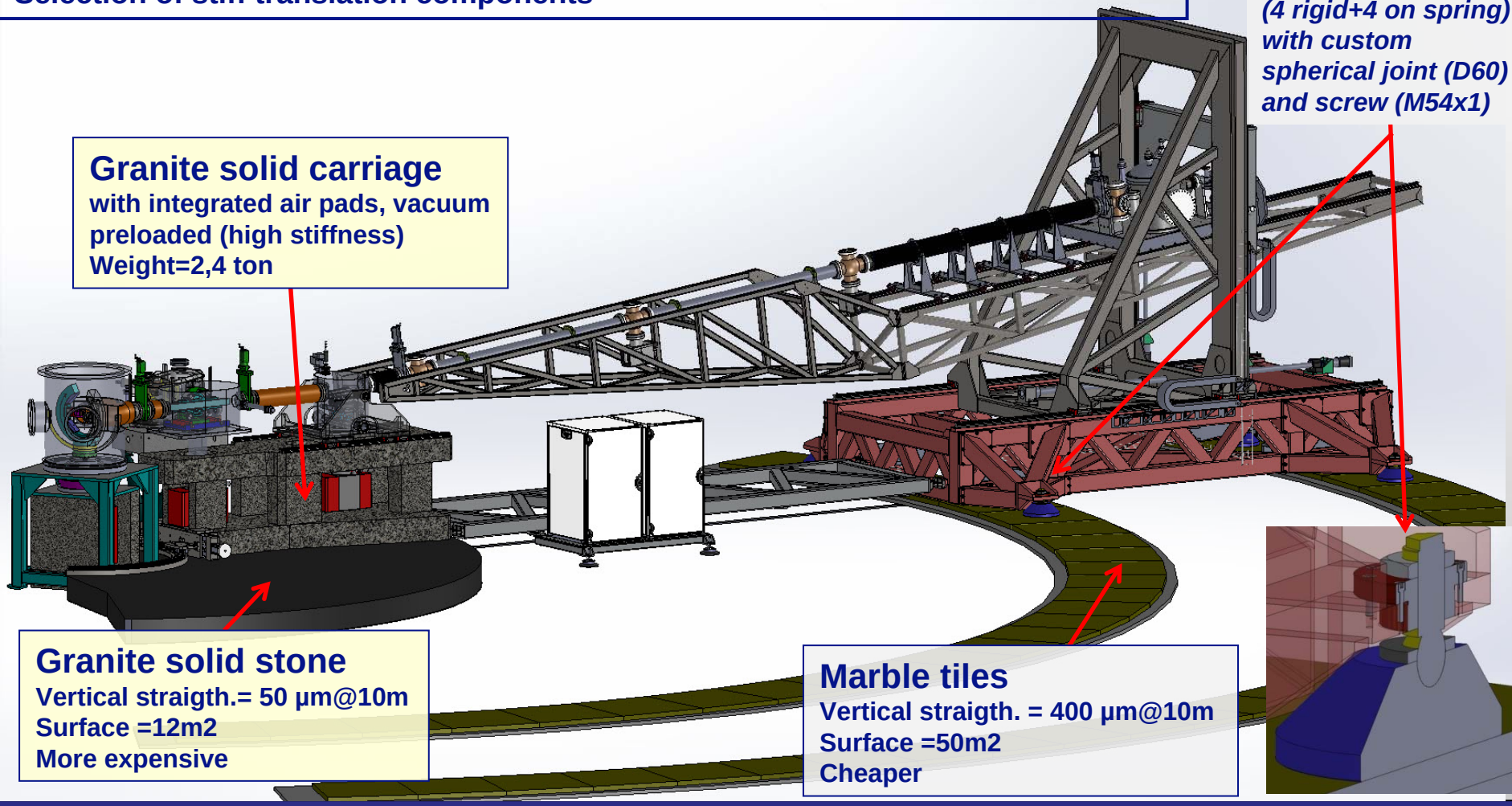

The UPBL7 RIXS spectrometer (3/3)

How to ensure high stability on such large structures?

- **Optimisation by careful FEA calculations of the design of large support frames.**

Selection of stiff translation components

FEM modal analysis of the detector frame:
Results: 1° freq=18,5Hz, structure weight =3ton.

Oversized rails and roller carriages
(Schneeberger MR45-B, coupled for X mov.)

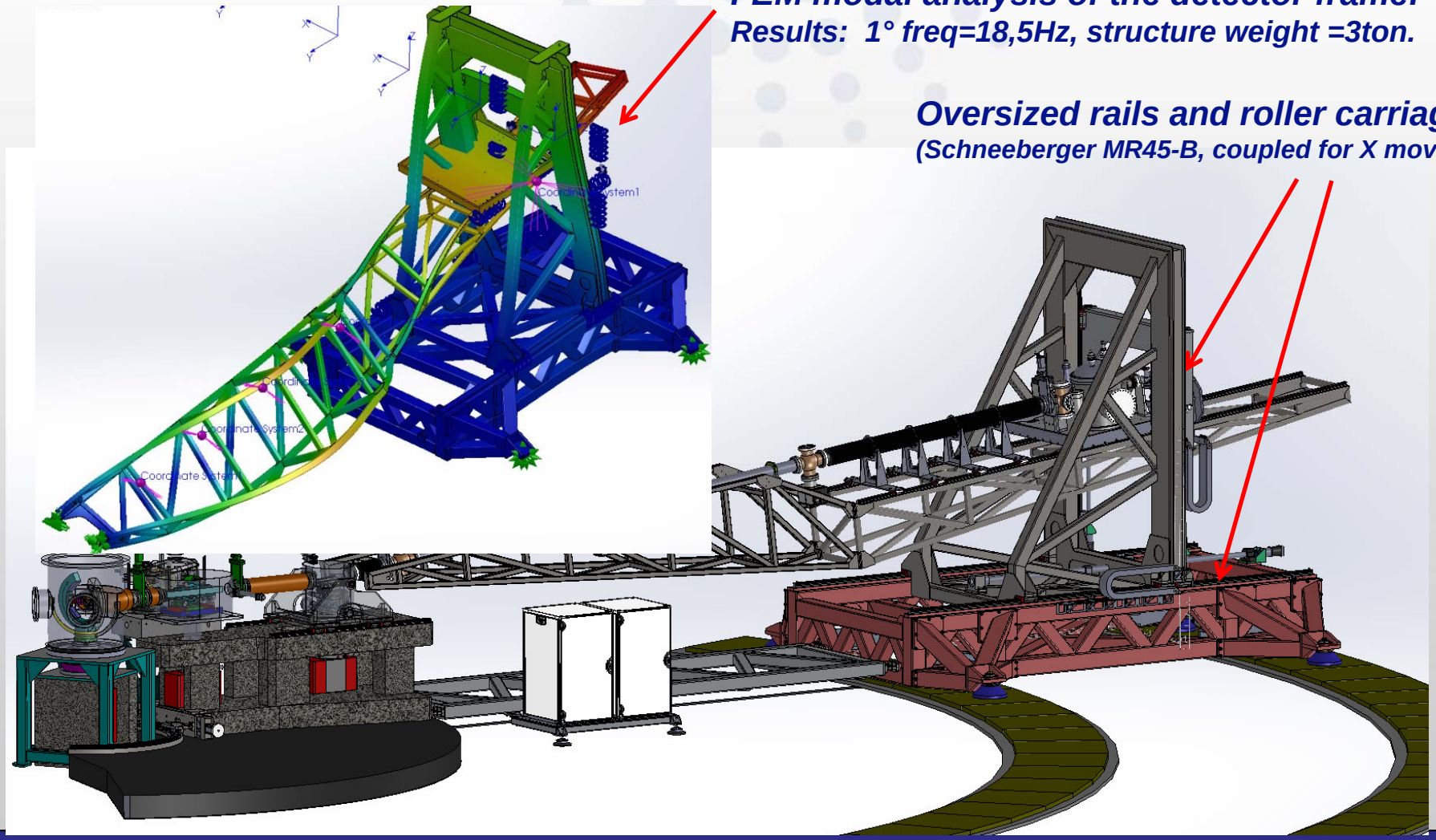

The UPBL6 X-ray Raman spectrometer (1/3)

UPBL6: Inelastic X-ray scattering and X-ray emission (5-20 keV) - Two end station X-ray Raman

Objective of the design: a large number of analyzer-crystals can measure the scattered beam in positions corresponding to a well defined momentum transfer q.

6 units can be set at different angles and measure simultaneously. Each unit encloses 12 analyser crystals.

=> 72 crystals.

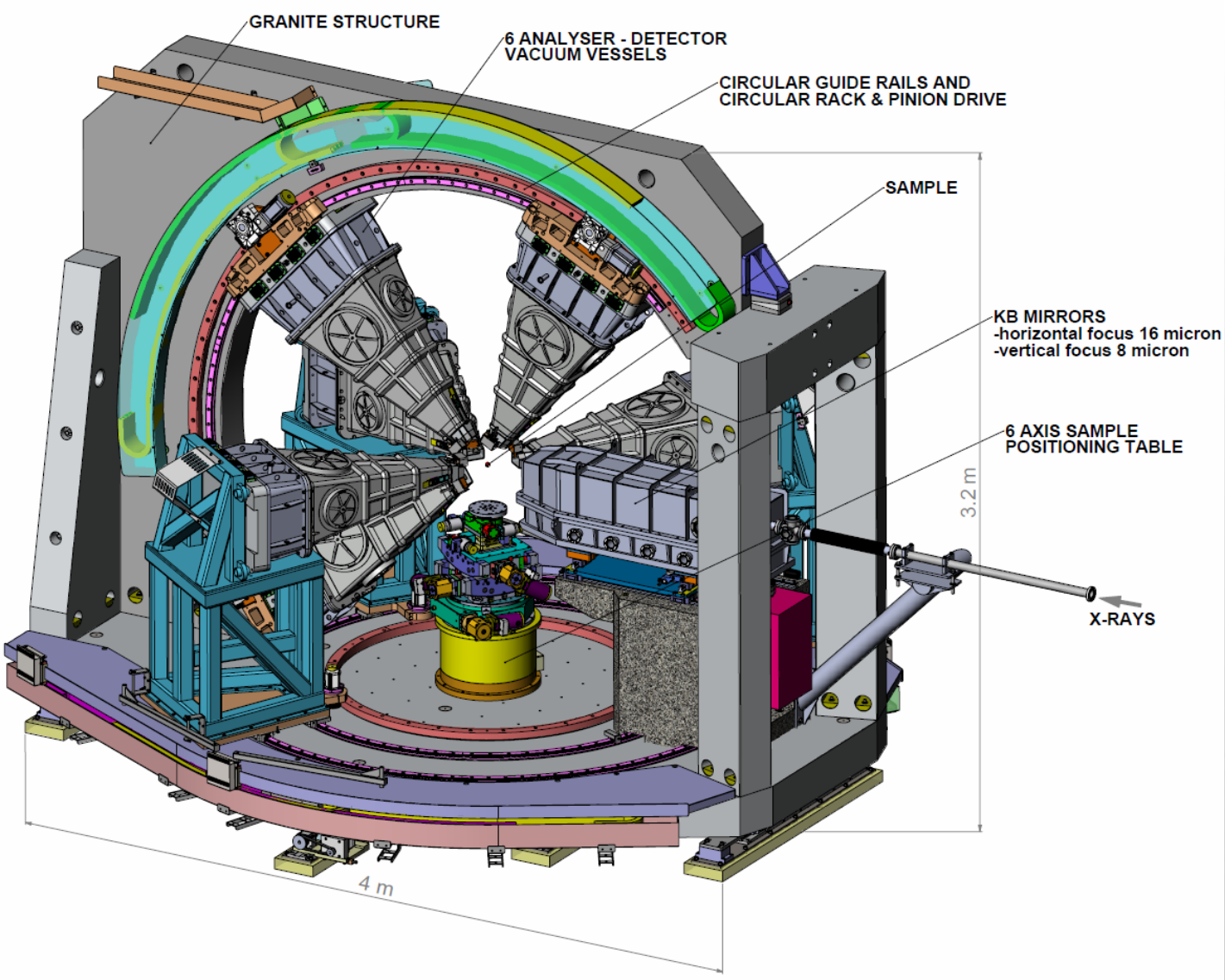

Scientist: G. Monaco
Engineers: K. P. Martel
Current status: Installation

The UPBL6 X-ray Raman spectrometer (2/3)

The twelve crystals of each analyser unit are adjusted to focus the scattered beam on the same detector (Rowland geometry). Stability required for focussed spot on the detector: <55μm.

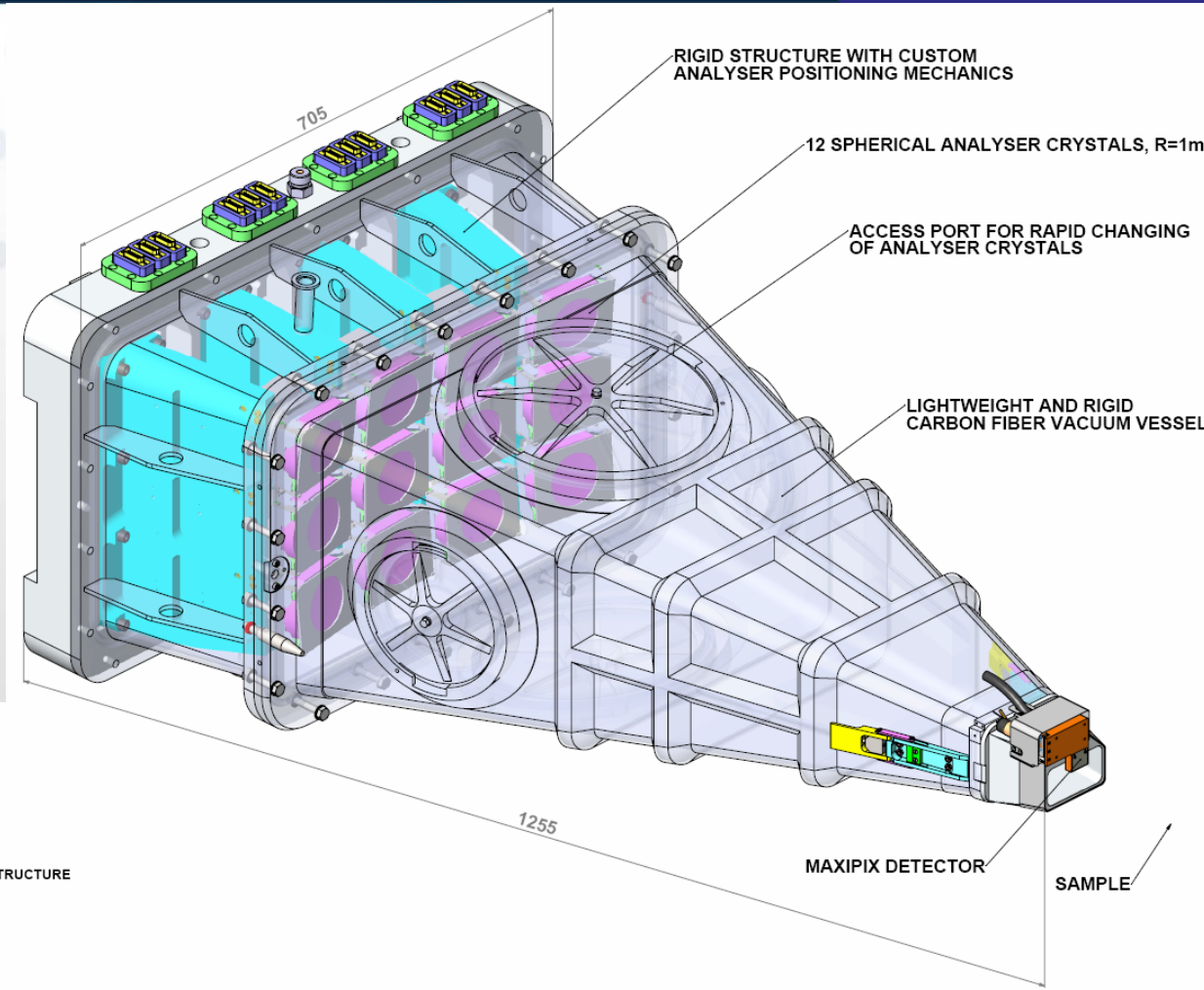

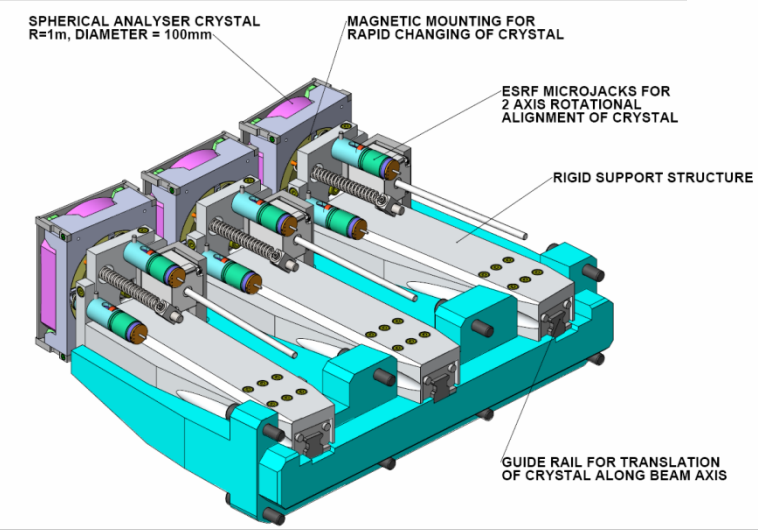

The UPBL6 X-ray Raman spectrometer (3/3)

The "cathedral"

Sphere of confusion (vertical and horizontal rails): 100μm (measured)

Temporary metrology supports

Carbon fiber vacuum chambers

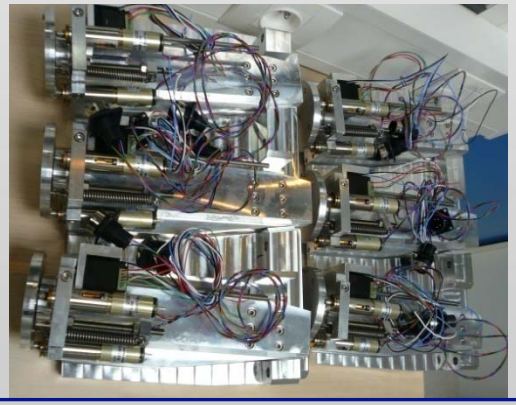

Crystals compact motorisation

The UPBL9a SAXS Tube (1/2)

UPBL9a (ID02): Time-Resolved Ultra Small-Angle X-ray Scattering (TRUSAXS) – Energy: 12keV

Scientists: T.Narayanan, P.Boesecke, M.Sztucki **Engineers: S.Guillet, J.Lenardon, P.Van Vaerenbergh**

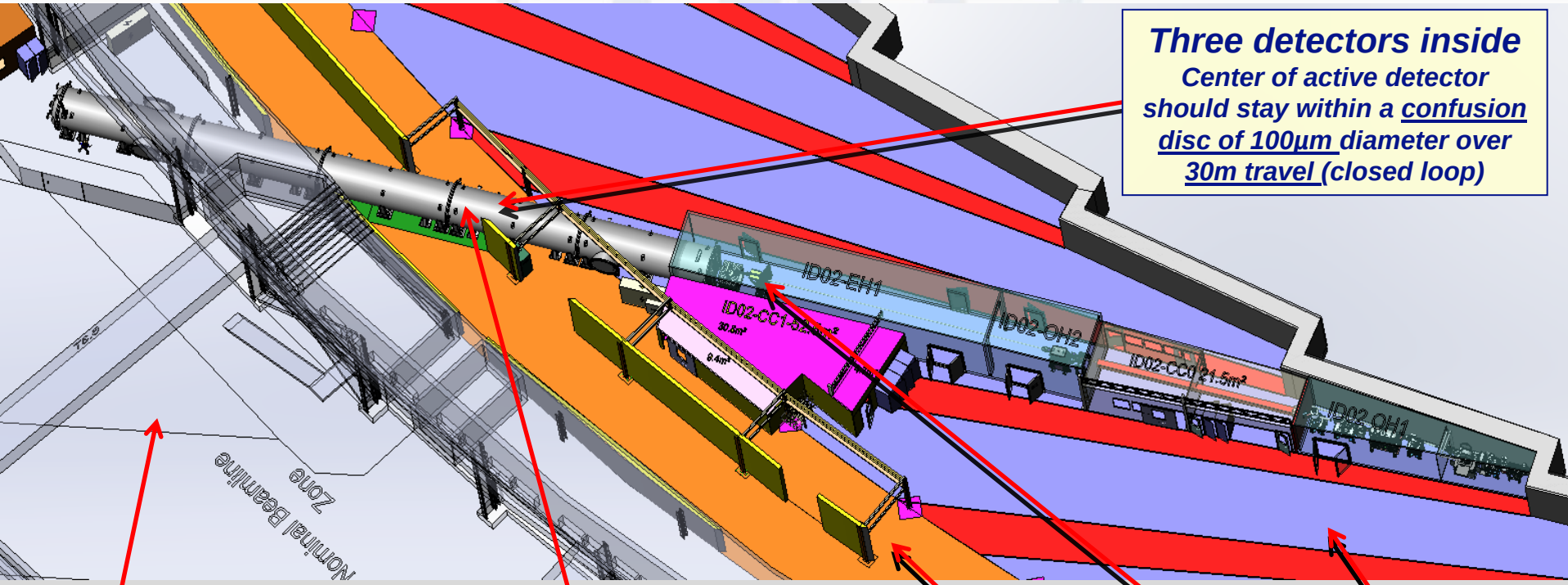

Three detectors inside
Center of active detector should stay within a confusion disc of 100µm diameter over 30m travel (closed loop)

New slab EXPH2

Tube
Length = 32 m Diameter = 2 m
Weight = 39t 5 sections

Material : 304L Stainless steel
Thickness = 8mm (incl. radiation protection shield)

Vacuum = 10-2mbar (in 2hrs pumping, 100m3)

Freeway

Sample

Current slab EXPH1

The UPBL9a SAXS Tube (2/2)

Laser alignment system
Laser parallel to the X beam from the back (in house devt)

Wagon
1.7m(l)x1.4m(w)x1.3m(h)
Aluminium, weight ~1t
Air inside. Carrying 3 detectors

YZ2 translation table
Detector changing and positionning
Range (resol.) : Y = ±320mm (1µm)
Z = ±87mm (1µm)

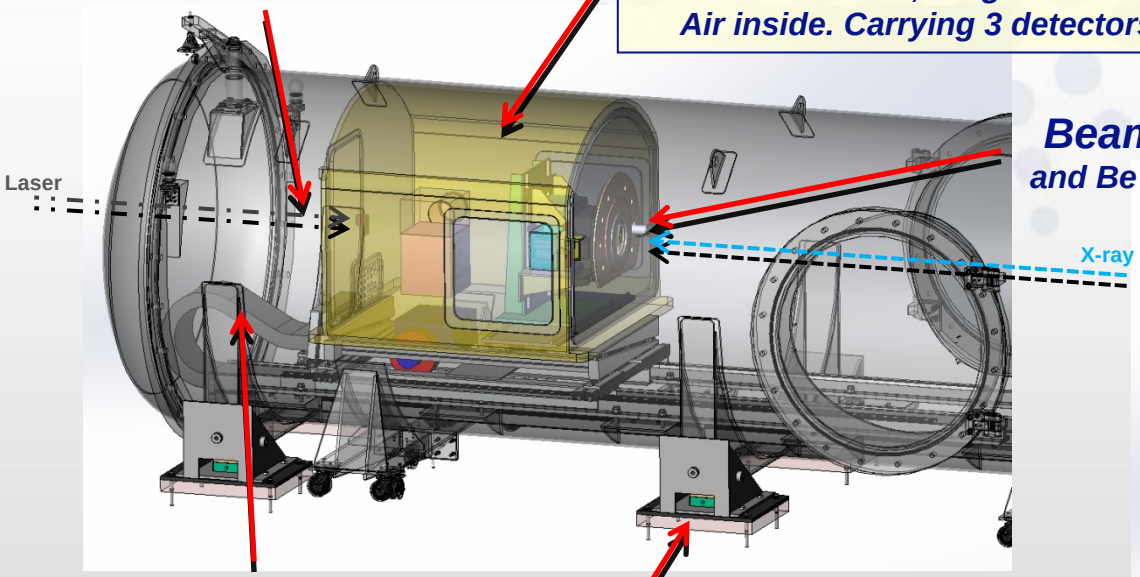

Beamstop
and Be window

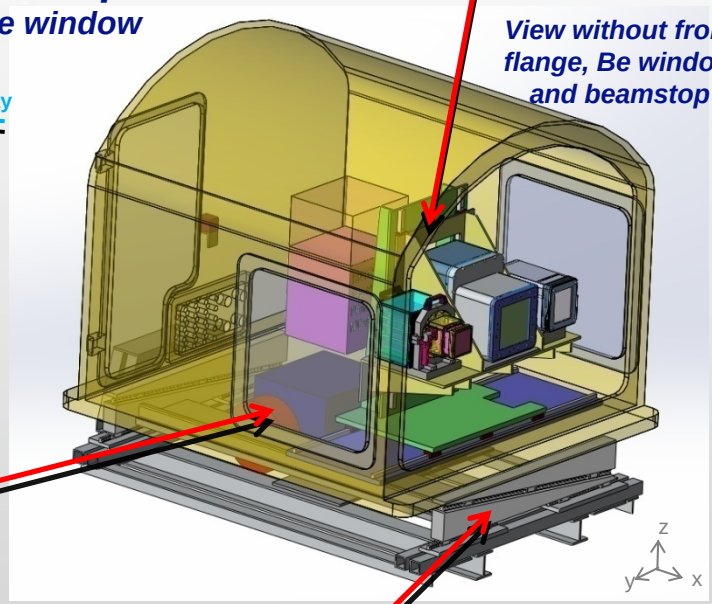

Accessories
outside the tube
(Pipe&cable inside cable carrier)

Feet
Z adjustment

Motor and encoder
Central rack and pinion under the wagon

YZ1 translation table
Active alignment : closed loop with laser alignment system.
Confusion disc of 100µm diam. over 30m
Range (resol.) : Y = ±10mm (1µm)
Z = ±10mm (0.25µm)

- Pre-study : ESRF engineers
- Study, manufacturing and installation : Cadinox – AVS (SP) 14months

Commissionning starts on Nov. 2013

Summary

In the frame of the ESRF ugrade phase 1, the following engineering developments for the new beamlines are underway:

- A Working Group has developped and fully characterised generic systems for the high stability high resolution positioning of large X-ray mirrors

- CRLs are used on several beamlines and associated mechanical devices like transfocators inserting lenses in and out with adequate alignment tolerances are being developed and built.

- Nano end station projects under development are based on deterministic mechanical design, online position metrology, error corrections and advanced control.

- KB systems with high compacity, high stabilty. are in development for nano end stations.

-The design and construction of several large experimental stations (spectrometers, SAXS tube) is underway. This type of project involves considerable engineering resources. Commercial bricks (sub-assemblies) may be used, however, it is strongly recommended to have the general design done by in house engineers, with a lot of exchanges with the scientists, in order to perfectly adapt the design choices to what is really needed and convenient for the experiment.

THANK YOU FOR YOUR ATTENTION !

Many thanks to the ESRF egineers and scientists who contributed to these slides