Optimisation of X-Ray mirror mounting: test bench and results.

Muriel Mattenet[1], Robert Baker[1], Ray Barrett[1], Carole Clavel[1], Yves Dabin[1], Laurent Eybert[1], Jacques Guillemin[2], Marc Lesourd[1], Trevor Mairs[1], and Emmanuel Taurel[1].

[1]*ESRF, B.P. 220, F-38043 Grenoble Cedex, France*
[2]*SPRETEC, 19 rue des Ciments, 38180, Seyssins, France*

SUMMARY

1- INTRODUCTION: AIM OF THIS WORK

Build a test bench to characterize and optimize key parts of our generic mirror assembly

2- DESCRIPTION OF THE TEST BENCH

→ *Analyze the thermal behavior*
→ *Analyze the vibration behavior*

3- APPLICATIONS

→ *"V and ball" kinematic mount versus flexures kinematic mount*
→ *Feasibility of thermal sliding system versus flexure system*

4- CONCLUSION

2- THE TEST BENCH

FUNCTIONALITIES:

- ✓ **Apply temperature gradients thanks to resistors connected to a power supply.**
- ✓ **Register automatically temperatures via thermocouples.**
- ✓ **Register tilts and radius of curvature of the mirror thanks to an interferometer.**
- ✓ **Measure the vibrations thanks to accelerometers.**
- ✓ **Execute the data treatment with Matlab.**

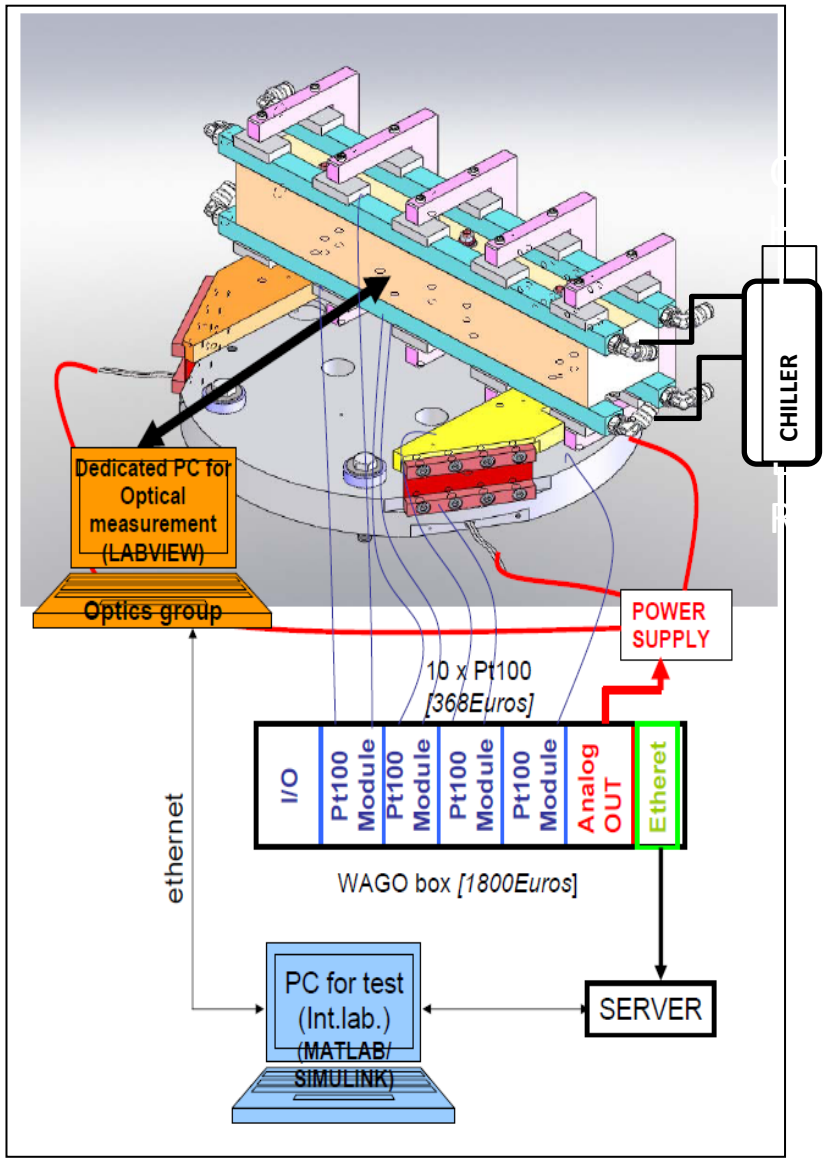

3- APPLICATIONS

“V and ball” kinematic mount versus flexure kinematic mount

3-1 “V and ball” kinematic mount

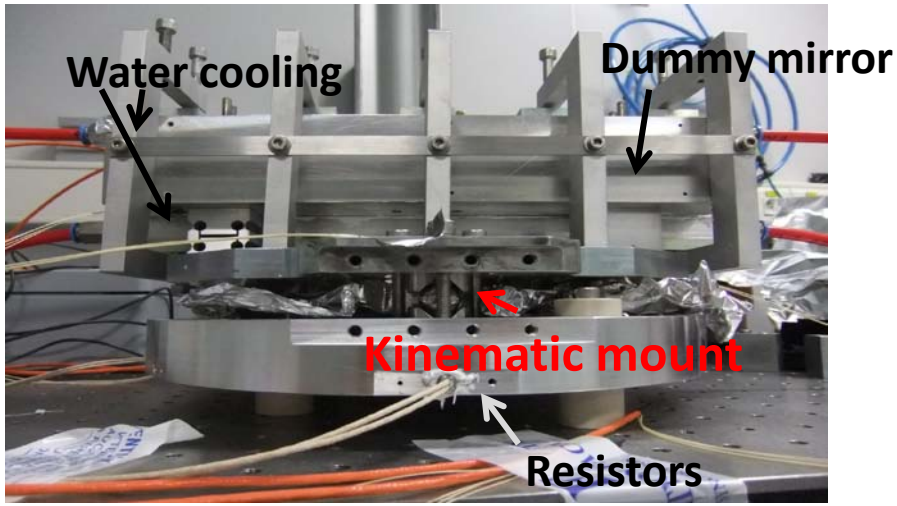

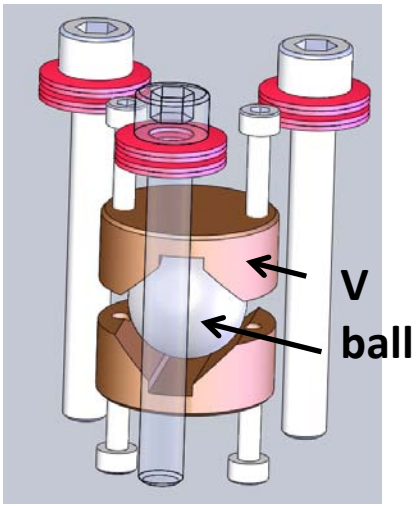

3-2 Flexures mount

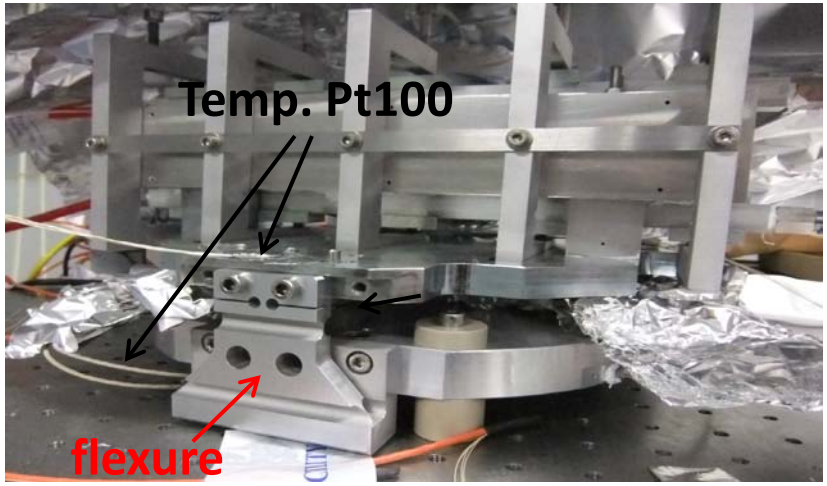

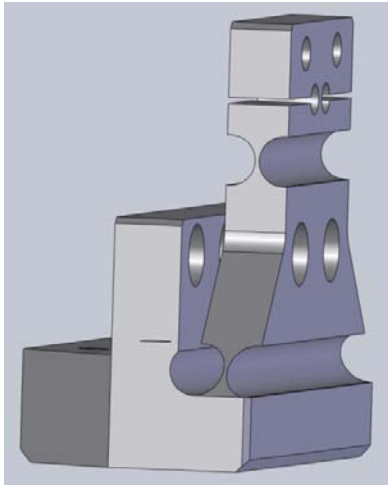

Temperature cycle applied to the basis (Power = 26W)

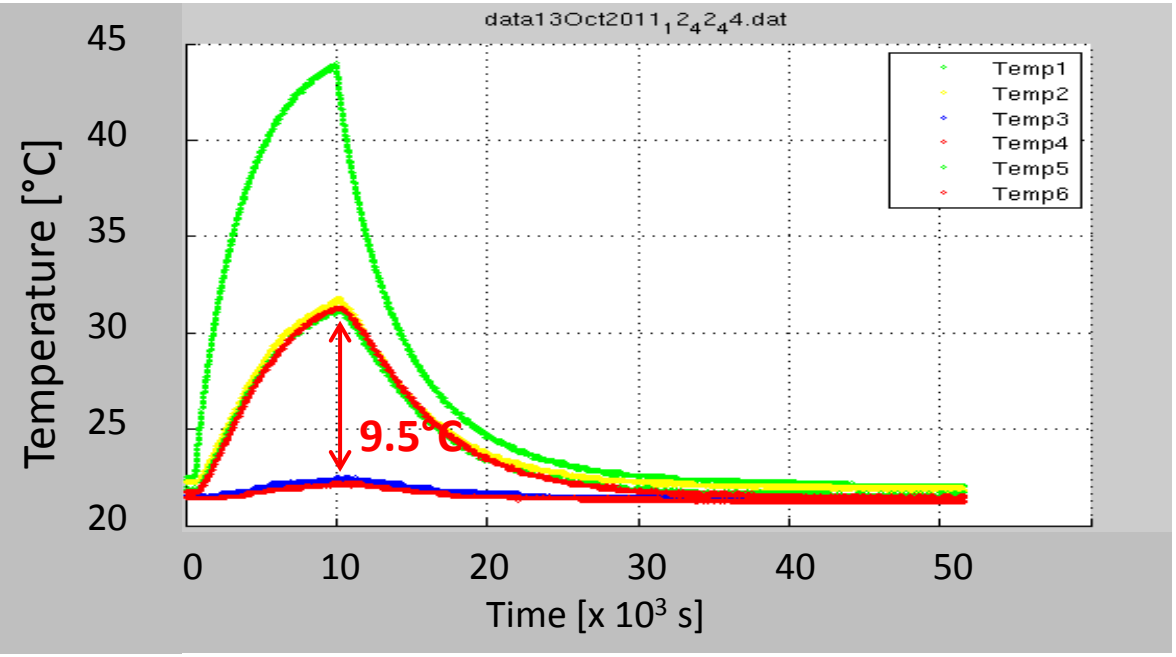

3 Flexures. The temperature difference *between the support and the mirror is 9.5°C.*

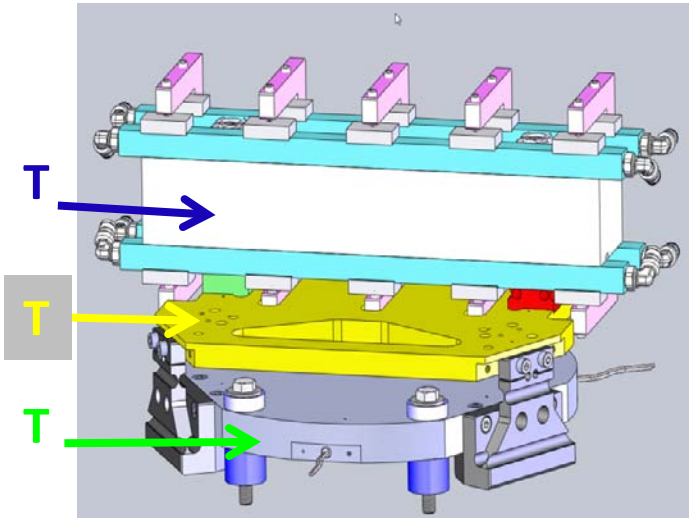

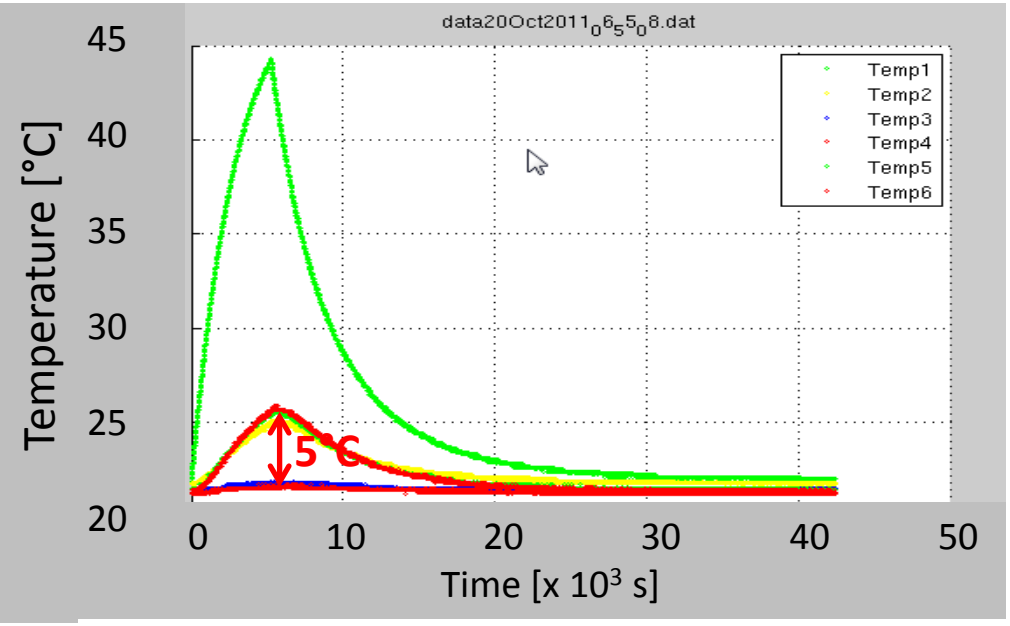

3 Balls in V mounts. The temperature difference *between the support and the mirror is 5°C.*

The minimum delta T between support and mirror, the best.

Temperature cycle applied to the mirror itself (from 20.5C to 40.5C)

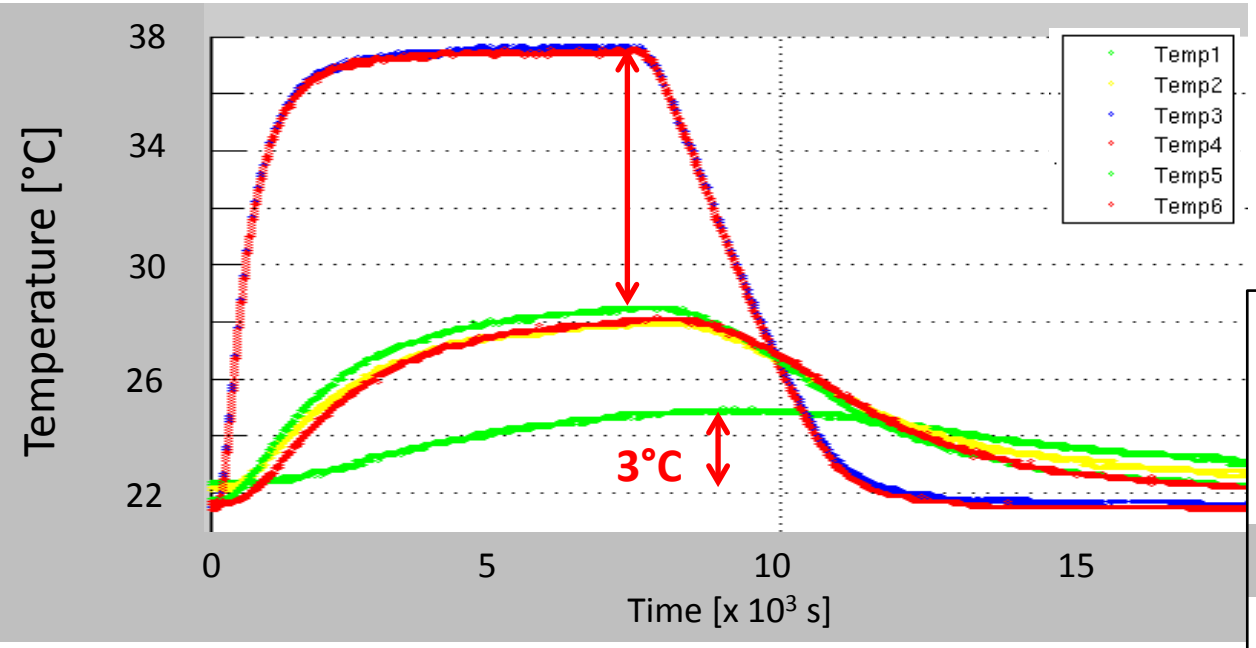

3 Flexures. The temperature of *the basis fluctuates more (3°C)*

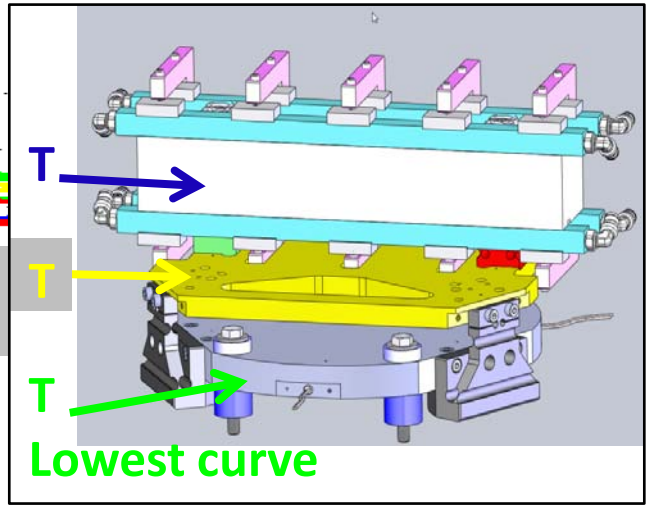

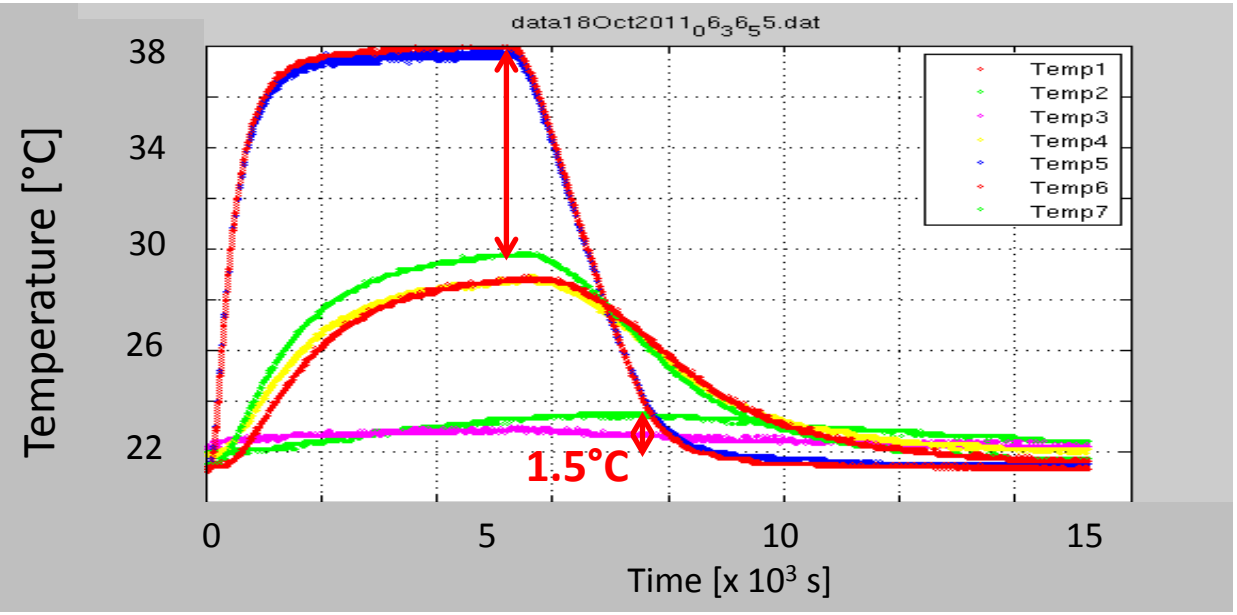

3 Balls in V mounts. The temperature of *the basis fluctuates twice less (1.5C)*

The minimum T gradient for the support is the best.

Vibration behavior

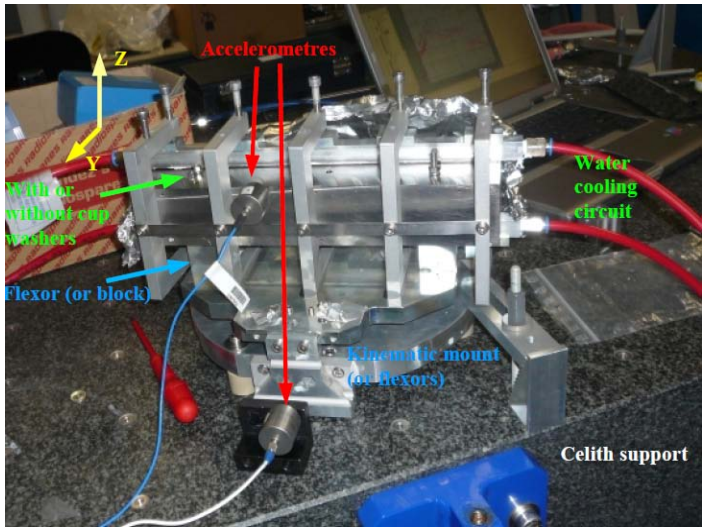

The accelerometers are fixed :
- on the marble
- on the basis
- and on the mirror

Mirror:8kg

Initial load of 13kg:

Flexure mount: 128Hz (X and Z) - 134Hz (X,Y and Z)

"V and ball" mount: 150Hz (Y and Z) - 175Hz (X,Y and Z)

Additional load of 11Kg (total = 24Kg)

Flexure mount: 62.5Hz (X and Z) - 123Hz (Y and Z)

"V and ball" mount: 49Hz (X and Z) - 81Hz (Y and Z)

Results analysis and optimization

Points in favor of the "V and ball" mount versus flexure mount. We shown that for the "V and Ball" system

-The thermal response time, ie the mechanical stabilization time, is shorter.

-The temperature gradient induced in the mirror and its close support is smaller.

- Up to the nominal load condition 11Kg, the first natural frequency is higher.

IMPROVEMENTS of the weak points of the "V and Ball" mount.

- *The first natural frequency is lower for heavy loads and the mounting is more difficult:*

→ This is due to the spring washers that we put to fix the balls. Then we replace it by specific screws with flexure. We can now tighten the balls and nevertheless let them roll.

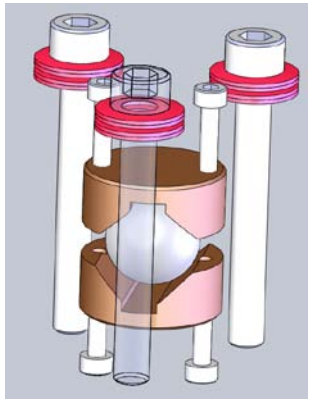

With spring washers

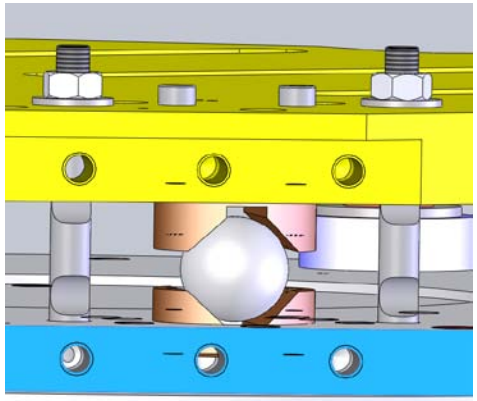

Mounting with two flexure screws

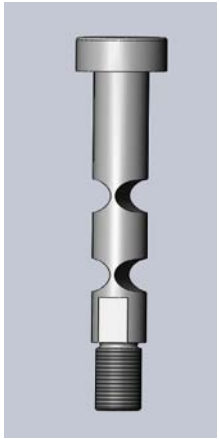

- *No damage in time:*

→Depending of the tighten torque, the ball may be marked. We replaced it by ceramic balls with a higher Brinell coefficient.

Stainstell: 250 HB versus ceramic: 550HB

→ Ceramic balls are even better for thermal isolation.

Feasibility of a thermal sliding system

Thermal sliding head versus flexure system.

Problem to be solved: When we bake out a double mirror, the piece which links the two Z head may extend up to 1mm or 2mm. Therefore a system must be able to take this extension.

Two options were envisaged: flexures able to take a large displacement or a thermal sliding system.

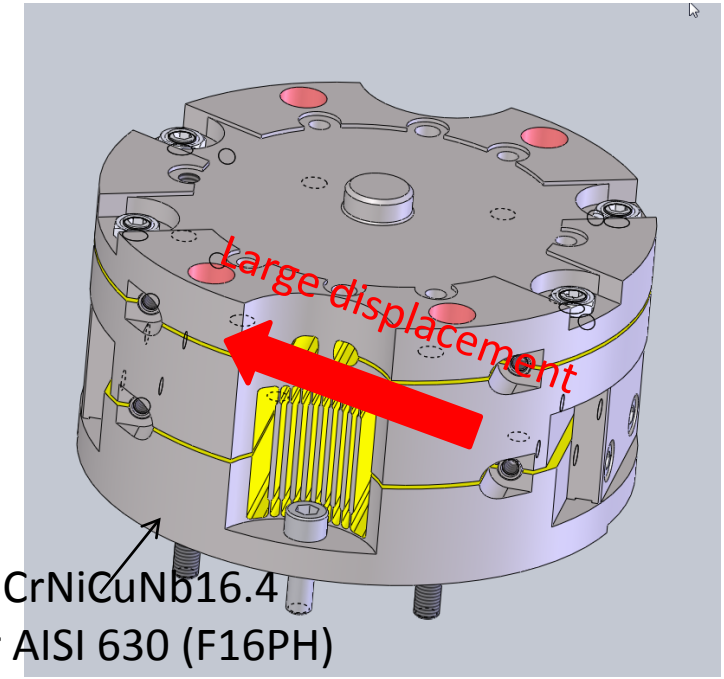

Principle based on deformation
Displacement up to 1mm
R. Baker talk

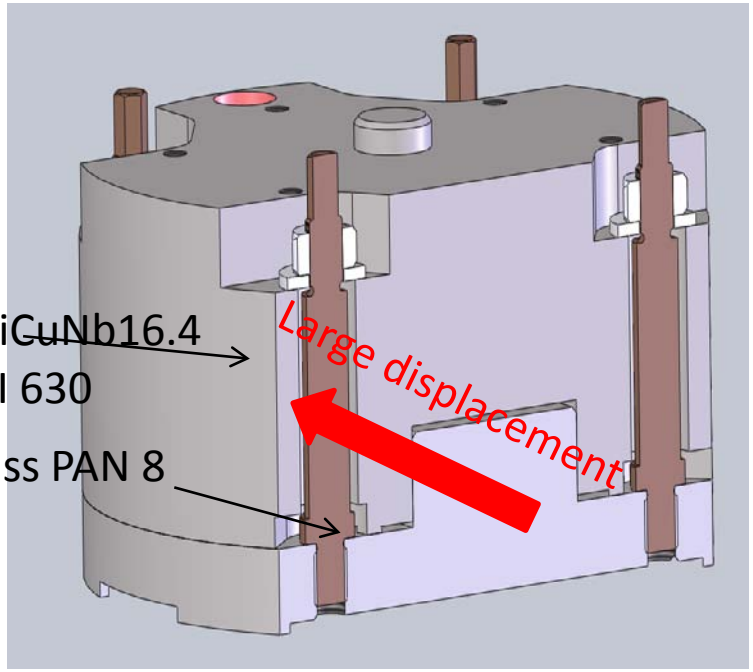

Principle based on sliding
Displacement up to 2 to 3mm

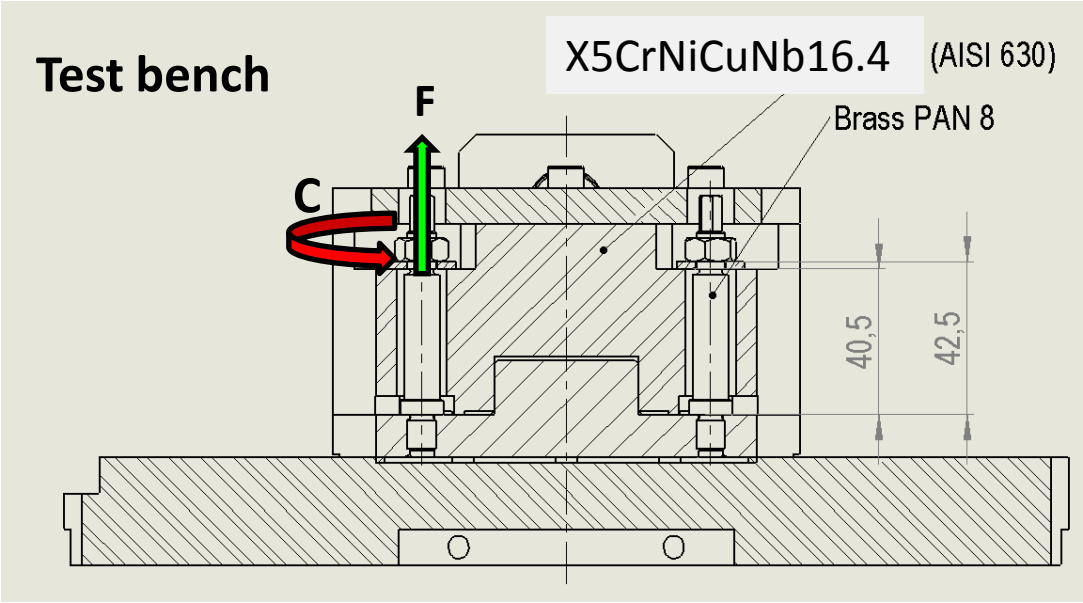

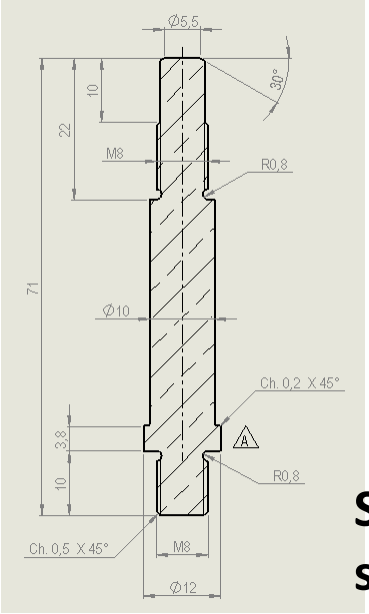

Special screw

Main characteristics of materials

Material properties	Brass PAN 8	AISI 630
E: Young Modulus [10^3Mpa]	115	197
α: expansion coefficient [10^{-6}m/m/K]	18	10.8

Results	C[N.m]	F[N]	Delta L[micron]
Analytical results	**2**	**952**	**4.5**
Finite element (COSMOS) results	**2**	**1041**	**4.45**

Theory

Two phenomena are considered in this system: the mechanical effect and the thermal effect.

1- The mechanical elongation of screws under stress:

- The torque applies to the fixation screws induces an axial force in the screws which can be quantify as follows.

According to the formulas from *Kellermann and Klein*:

$$F \cong \frac{C}{(P/2\Pi + 1.166 R_t \mu_t + R_h \mu_h)}$$

with

F : Tension in the screw [N]
C : tighten torque [N.m]
R_t : Mean thread radius [m]
μ_t : nut friction coefficient
R_h : Mean radius under nut [m]
μ_h : thread friction coefficient
P : step

- The stress induced in the screw creates an elongation of the screw according to *Hooke's law*:

$$\varepsilon = \frac{\sigma}{E}$$

with

σ : stress in the screw = F/A [tension/screw section: N/m²]
E : Young modulus [Mpa]
ε : Relative elongation [%]

2- Thermal expansion of material when heated

- When heated, mechanical pieces elongates according to the following law:

$$\Delta l = L.\alpha.\Delta_t$$

with

Δl : Elongation of the piece [m]
L : length of the piece [m]
α : expansion coefficient [10^{-6}m/m/K]
Δ_t : temperature gradient [K]

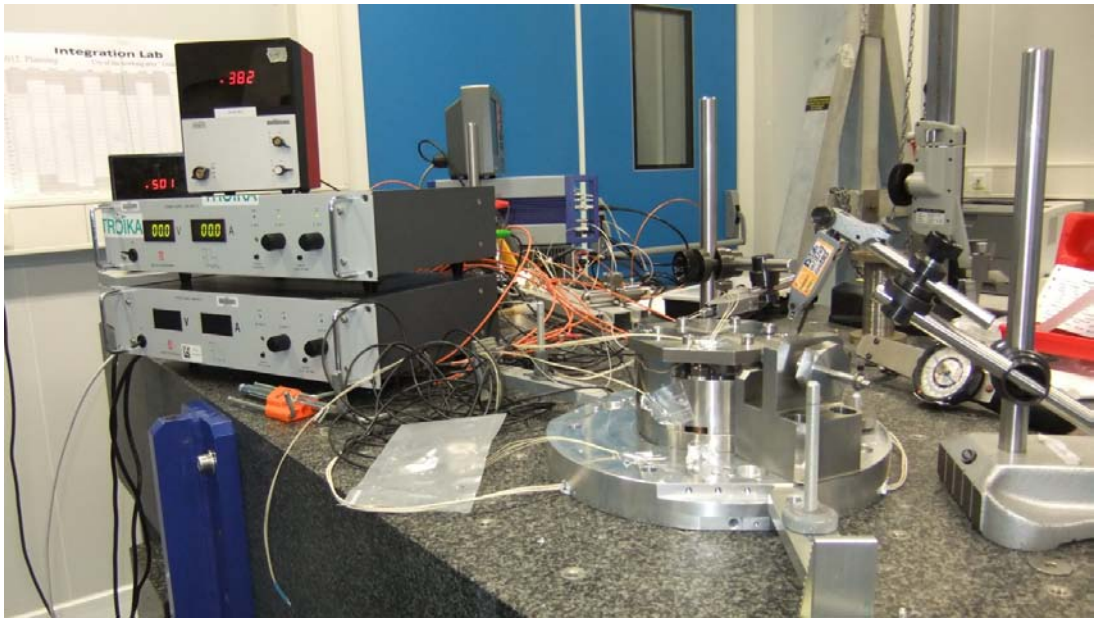
Integration Lab
TROIKA

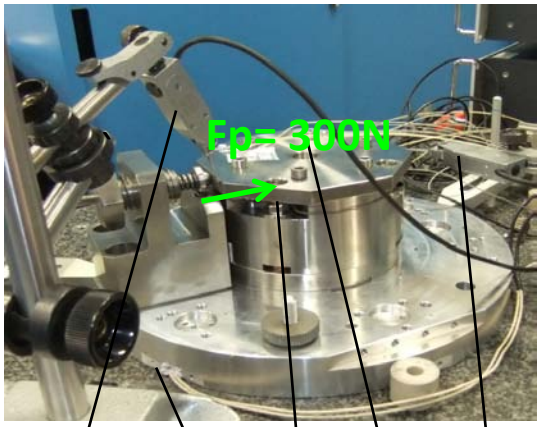
Fp= 300N
Sensor1 (S1)
Sensor2 (S2)
Resistors to heat the base
thermocouple
Resistance to heat the screws only

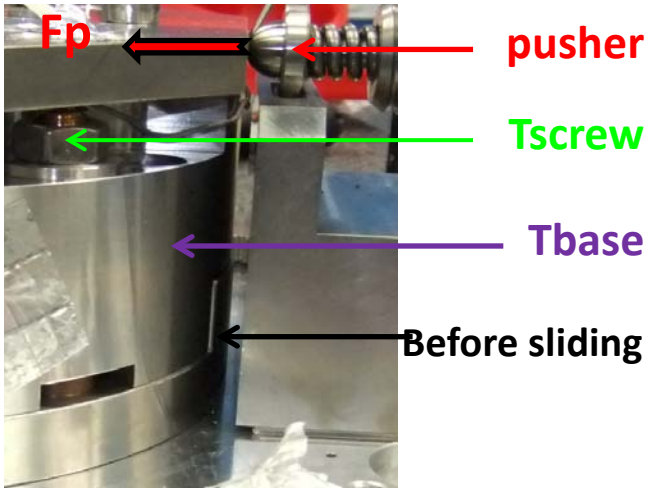
Fp
pusher
Tscrew
Tbase
Before sliding

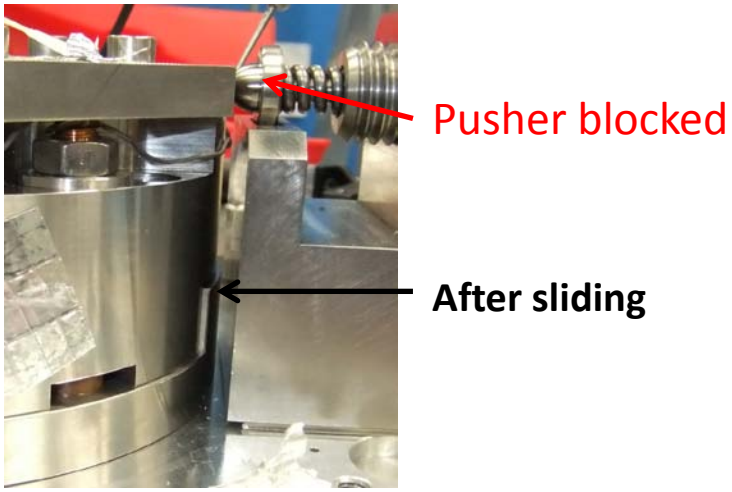
Pusher blocked
After sliding

Results when heating the screws only with different tightening torques

Screw tightness: 1N.m

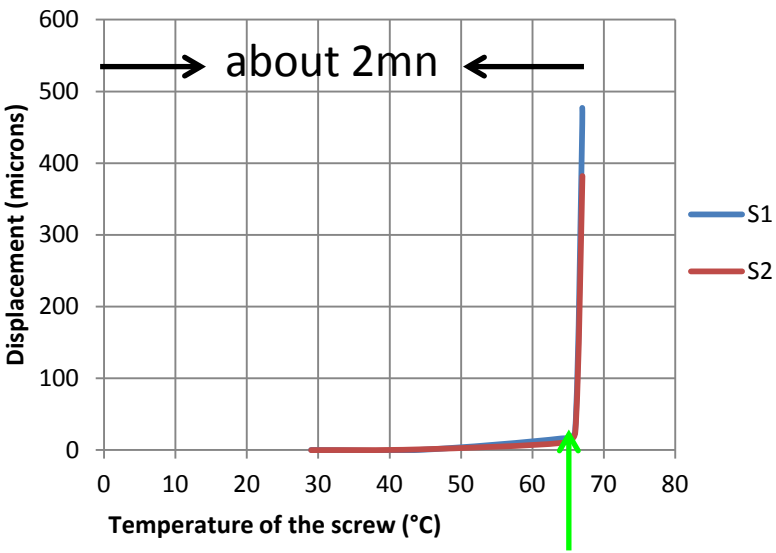

Tspecial screw = 67°C
Tbase = 24°C

Screw tightness: 2N.m

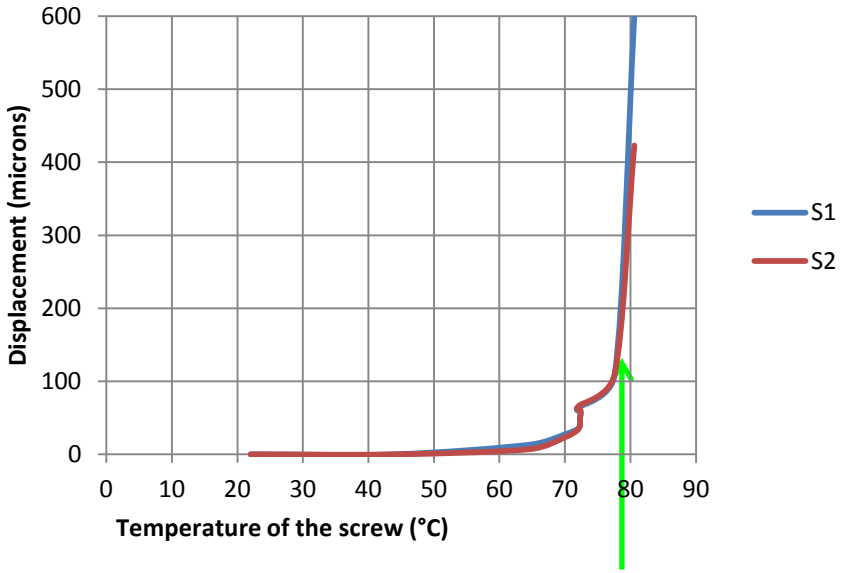

Tspecial screw = 79°C
Tbase = 42 °C

ΔI temp. (base –screw) = 33 microns.
ΔI (mechanics) = 2.2 microns
GAP ~ 31 microns

ΔI temp. (base –screw) = 34.8 microns.
ΔI (mechanics) = 4.5 microns
GAP ~ 30 microns

Estimation of the parameters for a real case of bake-out

If we want to make a bake out at 100°C. We know that we need a gap of about 30microns.
→ The temperature of the special screw will have to be at 107°C.

Vibration behavior

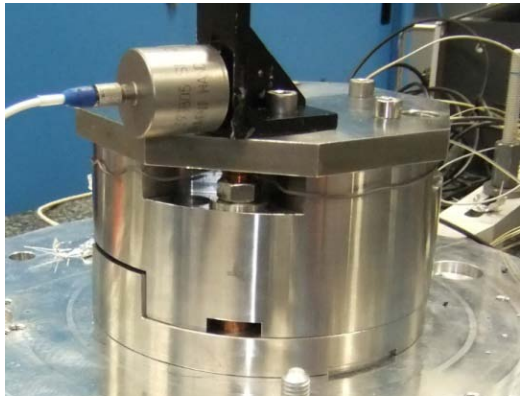

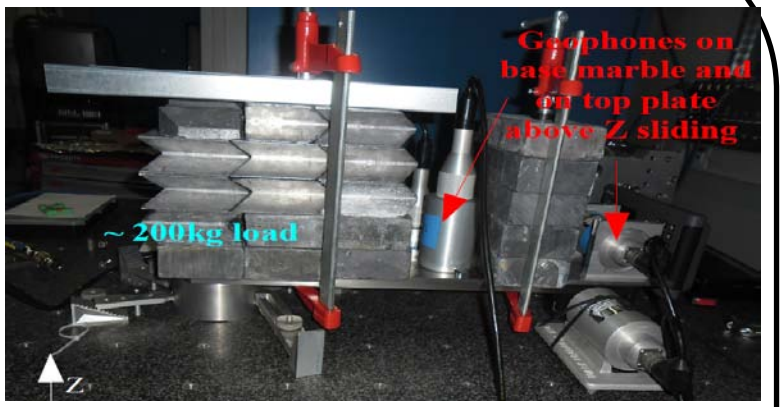

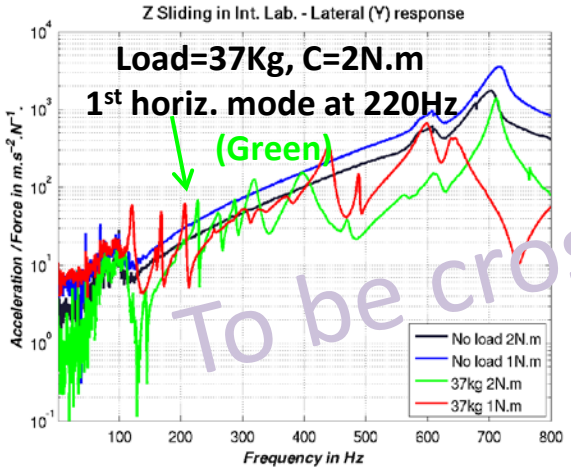

$$f = \frac{1}{2\Pi}\sqrt{\frac{K}{M}}$$

$$f_{100kg} \sim \frac{f_{37kg}}{1.64}$$

To be cross-checked

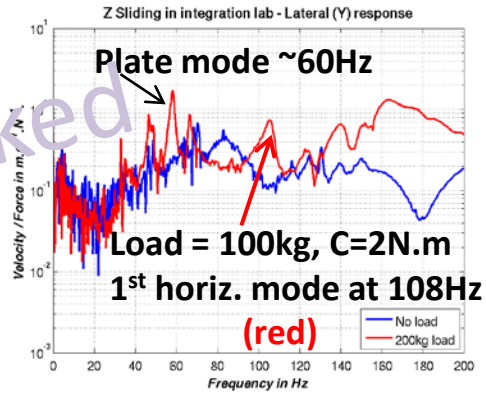

Flexure

200kg total
1st horiz mode: 47Hz

CONCLUSION and acknowledgment

✓ A test bench has been build for testing different mechanical options.

✓ A "V and ball" mirror mount has been qualified and optimize. ***It appears that a combined solution "V and ball"+ flexures screws is very promising.***

✓ Feasibility of a thermal sliding solution for mirror bake-out has been demonstrated. Industrial design is still to be done. ***It appears that a thermal sliding may be a good alternative to flexures.***

I would like to thank :

- All the co-authors for their help and advices.
- P.Marion, L. Zhang, D. Marin-Gaucherand, R. Hino, A. Thaï, T. Manning and G. Malandrino.
- The MEDSI organizers for accepting this talk.

THANK YOU FOR YOUR ATTENTION