Safety Analyses of NSLS-II Superconducting RF Cavities

Presenter: Viswanath Ravindranath

NSLS-II, Brookhaven National Laboratory, U.S.

Co-authors: Jim Rose, William Valet, William Gash, Payman Mortazavi, Sushil Sharma, Tom Schulthesis

Office of Science
U.S. DEPARTMENT OF ENERGY

BROOKHAVEN NATIONAL LABORATORY
BROOKHAVEN SCIENCE ASSOCIATES

Outline

Presentation Outline

- ❑Introduction
- ❑Pressure Vessel Safety Analyses

NSLS-II RF System Layout

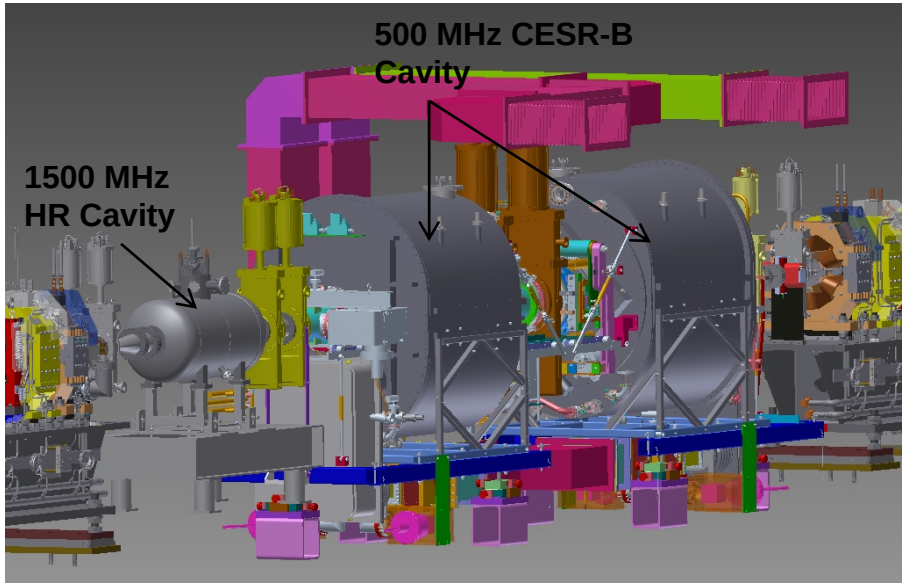

- The 3-GeV NSLS-II Storage ring will contain two superconducting RF sections
- Commissioning and operation of the SCRF cavities requires Safety Review and Approval by the Brookhaven National laboratory's Pressure and Cryogenic Safety Committee..

Introduction-Why Super-Conducting RF Cavity?

500 MHz CESR Cavity

1500 MHz Landau Cavity

- Cryogenically-Cooled Super-Conducting Cavities are increasingly being used at modern particle accelerators.
- Purpose: Recharge the electron beam that looses its energy in the form of synchrotron radiation
- **<u>Incentives for using Super-conducting RF cavities:</u>**
  - Ultra-low electrical resistivity and power dissipation- five orders of magnitude lower than for normal conducting RF cavities.
  - Net power savings even after considering the power required to maintain the SCRF at cryogenic temperature.
- **<u>Material of choice for SCRF is Niobium</u>**
- In the pure element category, Niobium has the highest critical temperature of 9.2 K
- Niobium is easy to machine and fabricate because of its high ductility at room temperature ~35-40%

Safety Regulations/Requirements for Cryo-System

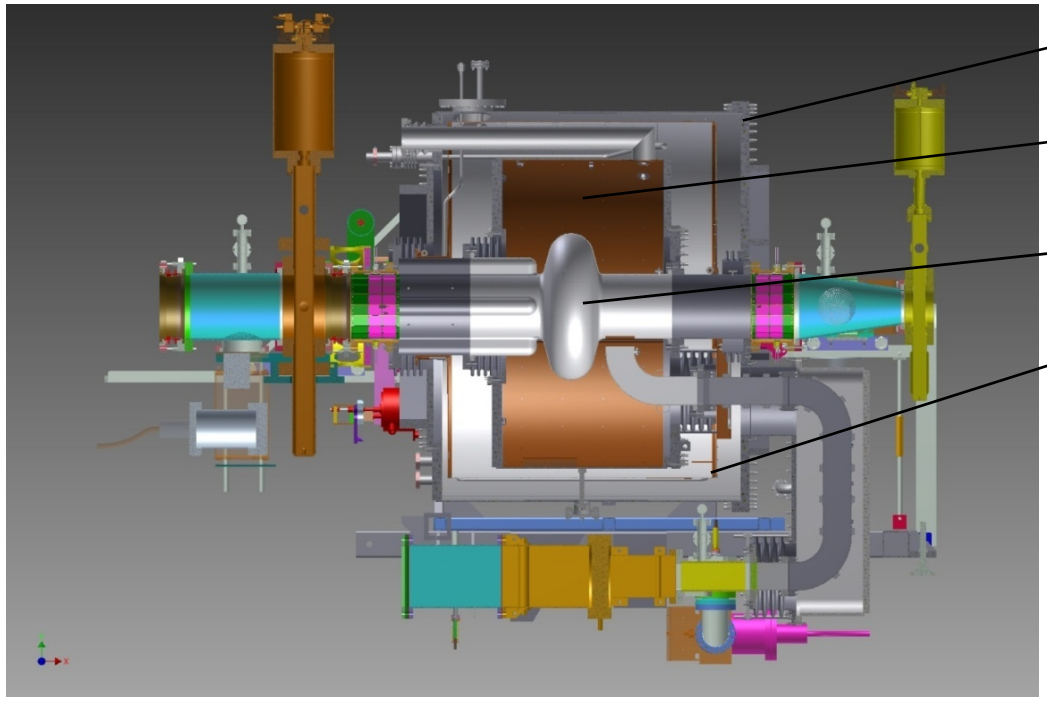

A. Outer Vacuum Shell

B. Stainless Steel Helium Vessel

C. Niobium Cavity

D. 77 K Thermal Shield

E. Helium Operating Pressure -1.28 Bar.A

Internal composition of SCRF cryostat

- **Heat leaks from the environment into the cryostat can lead to a disastrous pressure build-up situation**
- **In the U.S., the Code of Federal Regulations, "10 CFR 851", mandates all national laboratories to provide a level of safety greater than or equal to that provided by-ASME Boiler and Pressure Vessel Code, for all cryogenic vessels.**

Challenges

- Cavities have complicated and non-standard geometry- numerical code such as finite element analyses useful tool for analyzing such geometries.

- ASME does not provide allowable stress limits for Niobium.

Material Properties of Niobium

- As per ASTM B393-09, for RRR ⩾ 260 grade of Niobium used in the construction of SCRF,
  a. Minimum Yield Strength = 50 MPa (7.2 ksi)
  b. Minimum Tensile Strength = 95 MPa (14 ksi)
- Minimum "True stress-strain" curve constructed for RRR Niobium per ASME Sec. VIII Div. 2, Part 3, Annex 3D

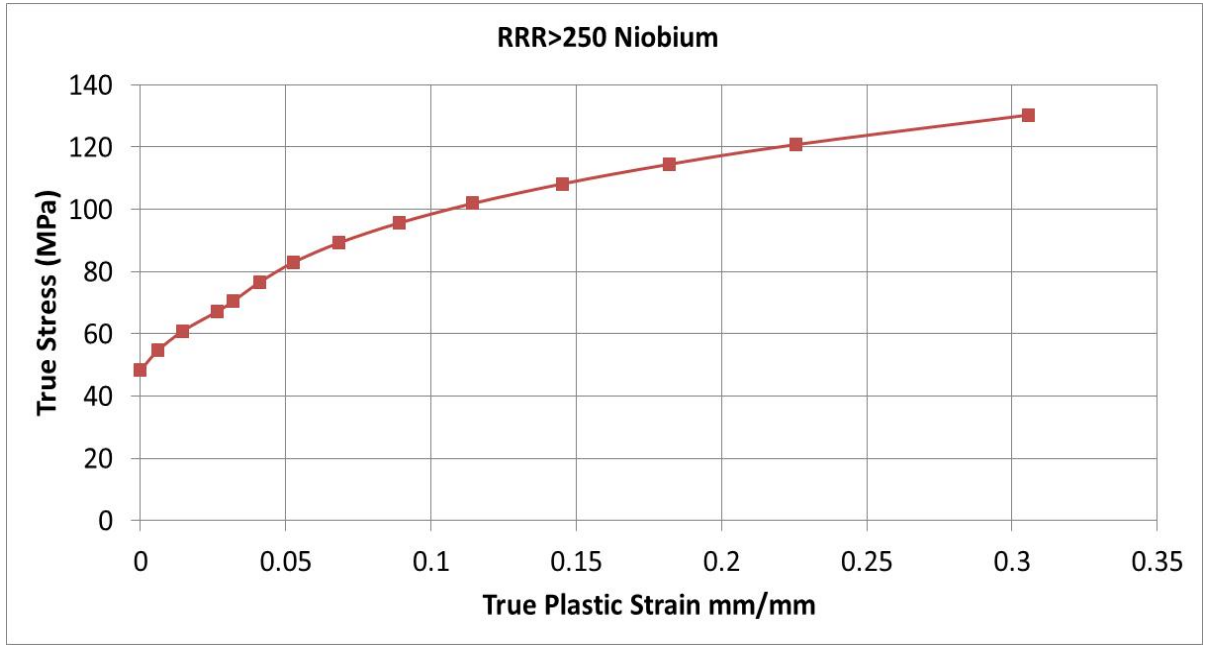

Parameters		Niobium RRR-250
Yield Stress	Sy	50
Ultimate Tensile Stress	Su	95
Sy/Su	R	0.50
0.2% engineering offset strain	ey	0.002
3.D.12	K	0.35
curve fitting exponent	m2	0.25
stress-strain curve fitting parameter	ep	5.0E-06
3.D.8	A2	174.33
3.D.6	m1	0.12
3.D.5	A1	98.94
Young's Modulus, Mpa	Ey	103000

Pressure Vessel Structural Analyses

- ASME VIII Div 2 “Design by Analyses” provides detailed instructions for analyzing complicated geometries using finite element analyses .

- ASME “Design-by-Analysis” requires four types of failure mode analyses:

  a. Plastic Collapse Analysis

  b. Local Failure Analysis

  c. Buckling Analysis

  d. Analyses for Cyclic Loading

     1. Fatigue analysis
     2. Ratcheting analysis

Plastic Collapse Analyses

Plastic Collapse Analyses

Elastic Analysis Method

- ❑Material property assumption: Linear-elastic
- ❑Input Required – Elastic Modulus

Limit Load Method

- ❑Material property assumption: elastic-perfectly plastic
- ❑Slope of the stress-strain curve beyond yield point assumed to be zero
- ❑Input Required- Minimum yield stress and Elastic modulus.

Elastic-Plastic Method

- ❑Input Required- Non-linear stress-strain curve

A. Plastic Collapse Analyses-Elastic Stress Analyses Method for Landau Cavity

Elastic Stress Analyses

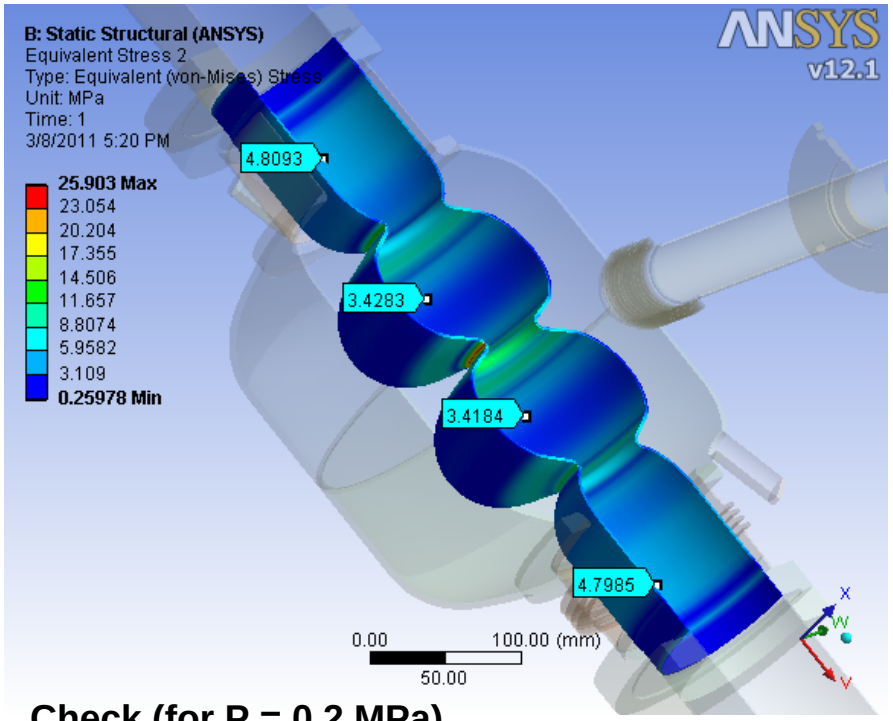

The equivalent stresses computed from the elastic stress analysis are categorized and compared to an associating limiting value

Acceptance Criteria

a. General Membrane Stress ⩽ (2Sy/3) → S
b. Local Membrane Stress ⩽ Sy
c. Local Membrane + Bending Stress ⩽ Sy

Stress Category	FEA Results (Mpa)	Allowable (Mpa)	Allowable Factor
Pm	5	33.3 (Sy/1.5)	6.7
PL	19	50 (1.5S)	2.6
PL + Pb	26	50 (1.5S)	1.9

Check (for P = 0.2 MPa)
Hoop stress in the beam pipe
R = 64.2 mm, t1 = 2.58 mm
Stress = PR/t = 4.9 Mpa

Hoop stress spherical cavity
R2 = 93.3 mm, t2 = 2.58 mm
Stress = PR/2t = 3.6 MPa

A. Plastic Collapse Analyses-Limit Load Method for CESR-B Cavity

- **Pressure loading was ramped up until limit load was reached. Limit load-point at which a small increase in load will cause very large displacements**
- **Design can be stated as safe if the pressure limit load is greater than the Maximum Allowable Working Pressure by a factor of 1.5**

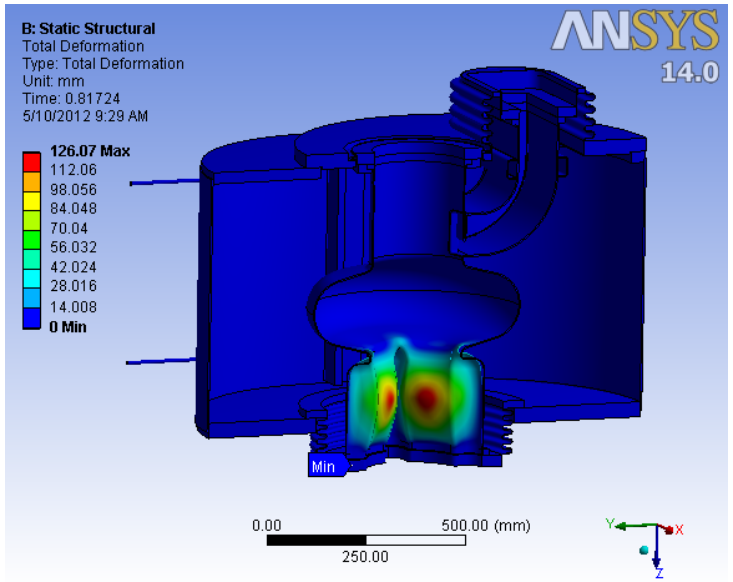

Displacement Plot at Plastic Collapse Point

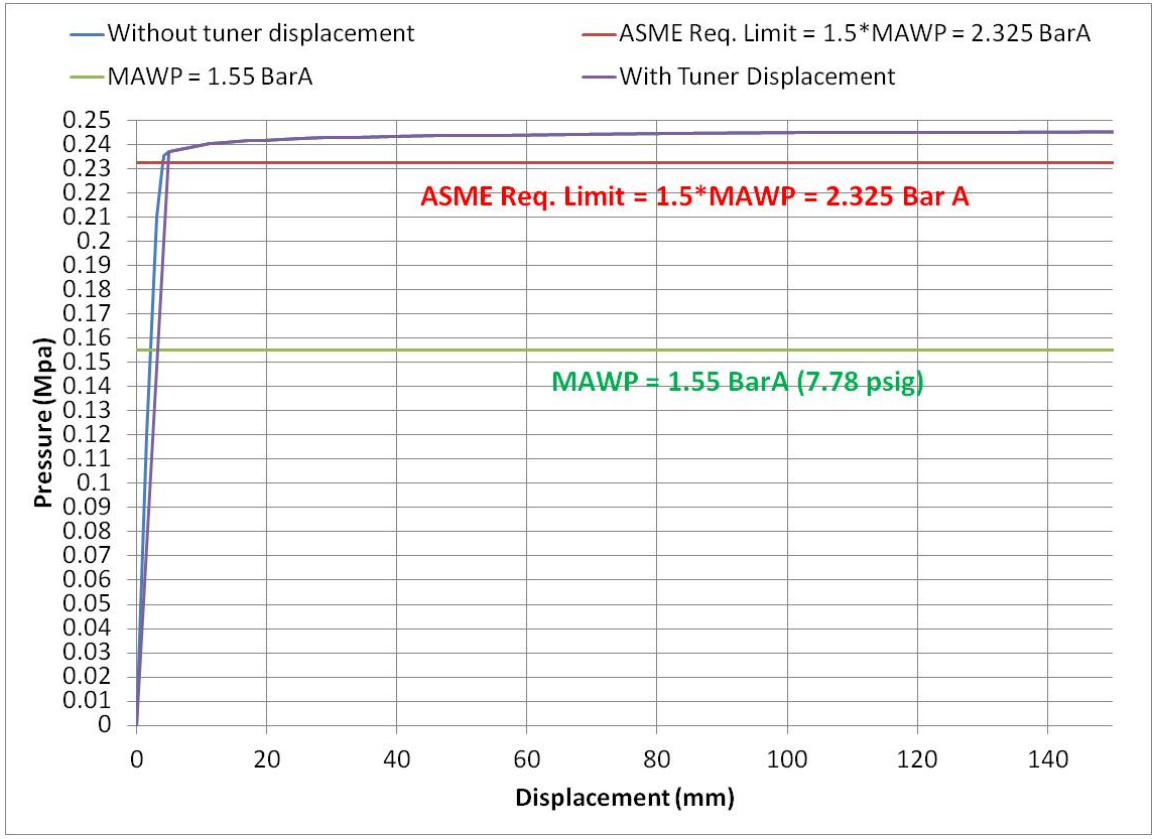

Pressure versus maximum displacement

B-Protection Against Local Failure

- Elastic-Plastic Analyses
- ASME code requires the pressure load = 1.7* MAWP.
- The design is safe if for the entire component:
  - FEA plastic strain ⩽ Strain Limit
  - Strain limit = ε_{Lu}.exp[-(α sl/1+m2)[{(σ_1 + σ_2 + σ_3)/3 σ_e)} - 1/3]
- For the cavity, maximum plastic strain at the interior of the fluted geometry
- External pressure results in compressive stresses-local failure would not occur

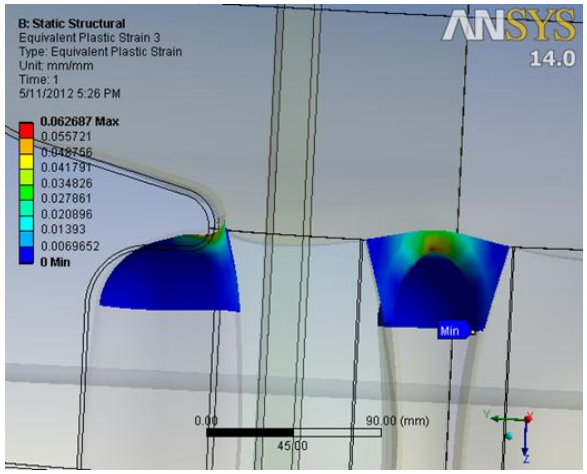

High Stress-Concentration Regions

Example for checking local failure critieria at each node in the FEA model

Node NO	X Location (mm)	Y Location (mm)	Z Location (mm)	σ1(MPa)	σ2 (MPa)	σ3(MPa)	Equiv. Stress_cal (Mpa)	σeq (MPa)	εpeq (mm/mm)	εcf (mm/mm)	εtotal (mm/mm)	εL (mm/mm)	Pass/Fail	Fail Count
168091	0.00	-127.95	-247.56	-1.92	-43.31	-99.87	85.17	85.17	0.06	0.05	0.11	2.93	PASS	0
146999	0.00	127.95	-247.56	-1.89	-40.82	-99.59	85.19	85.19	0.06	0.00	0.06	2.88	PASS	
168309	-4.60	-123.11	-258.54	-12.15	-87.15	-102.87	83.97	83.97	0.06	0.00	0.06	4.43	PASS	
147056	-4.60	123.11	-258.54	-7.21	-82.38	-97.27	83.61	83.61	0.06	0.00	0.06	4.00	PASS	
146707	0.00	123.88	-250.28	2.33	-18.49	-91.01	84.87	84.87	0.06	0.00	0.06	2.26	PASS	
148078	0.00	125.78	-248.72	-2.83	-26.64	-95.26	83.12	83.12	0.06	0.00	0.06	2.60	PASS	
168874	0.00	-125.78	-248.72	-2.72	-28.48	-95.25	82.71	82.71	0.06	0.00	0.06	2.65	PASS	
167793	0.00	-123.88	-250.28	2.61	-19.69	-90.72	84.42	84.42	0.06	0.00	0.06	2.28	PASS	
168870	0.00	-130.30	-246.84	-2.24	-52.24	-97.59	82.61	82.61	0.06	0.00	0.06	3.18	PASS	
167792	0.00	-132.75	-246.60	0.56	-64.07	-95.53	84.85	84.85	0.06	0.00	0.06	3.24	PASS	
153355	-124.88	3.80	-249.07	-5.44	-28.20	-97.13	82.69	82.69	0.06	0.00	0.06	2.73	PASS	

C-Protection Against Collapse From Buckling (cont.)

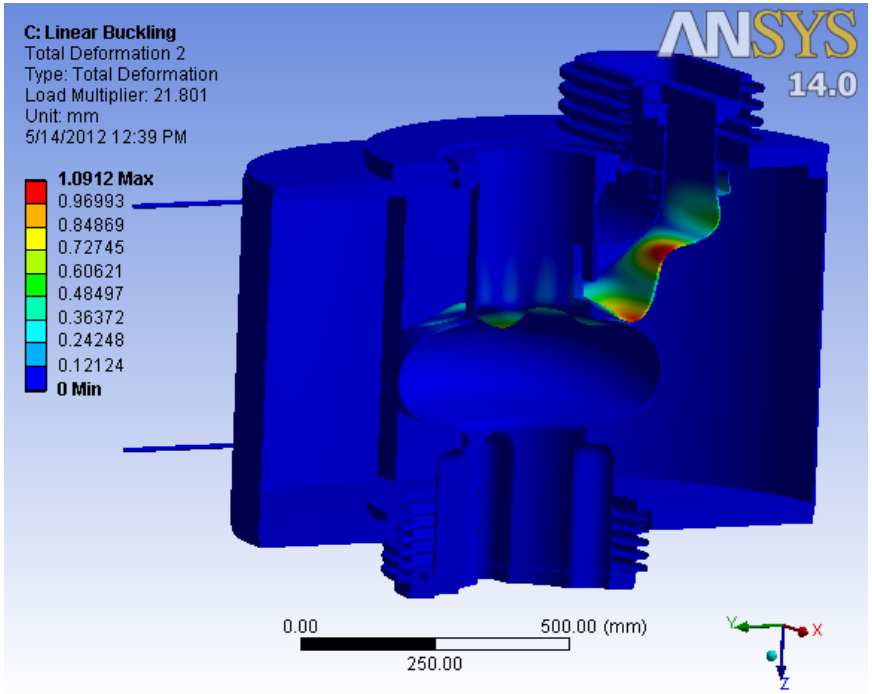

Mode 1: Factor – 21.8

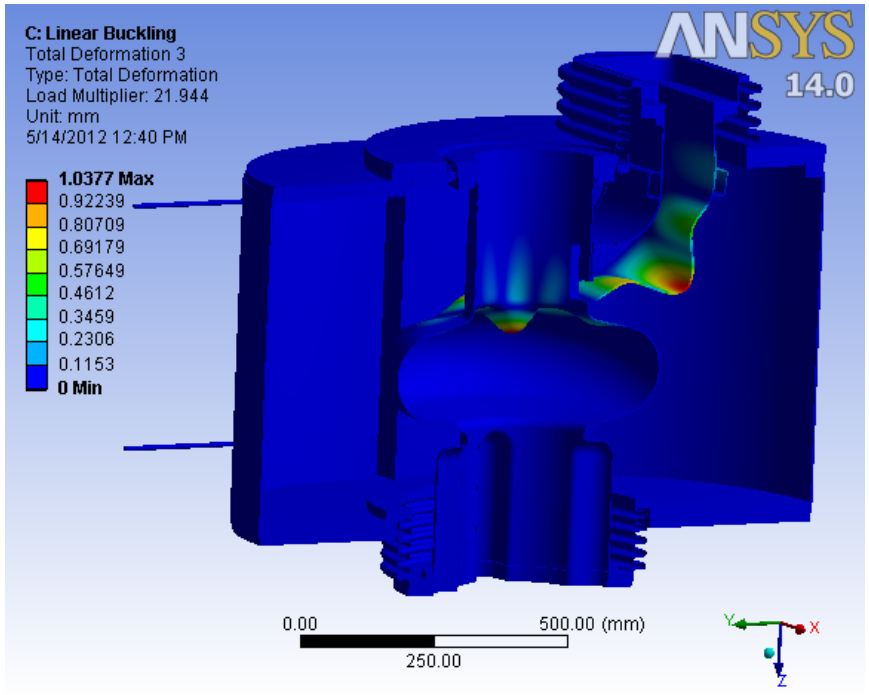

Mode 2: Factor – 21.9

1) **ASME required minimum "Buckling Load Factor" = Ratio of the critical buckling load to the applied load > 16 (load factor specified by ASME for components with spherical geometry)**

2) **Calculated "Buckling Load Factor" for the RF cavity = 22, Cavity will not undergo buckling at the MAWP= 1.55 Bar.A**

D(1) Protection Against Failure From Cyclic Loading-Fatigue

- **Fatigue Analysis Screening, Method A (2007, Sec VIII, Div2, 5.5.2.3):**
- **For components with attachments and nozzles in the knuckle region of formed heads if $N_{\Delta FP} + N_{\Delta PO} + N_{\Delta TE} + N_{\Delta T\alpha} \leqslant 350$, Fatigue analyses can be waived.**

Sym	Description	Cycles
$N_{\Delta FP}$	Expected number of full-range pressure cycles, including startup and shutdown; two cycles/year	60
$N_{\Delta PO}$	Expected number of operating pressure cycles in which the range of pressure variation exceeds 20% of the design pressure for integral construction	60
$N_{\Delta TE}$	Effective number of changes in metal temperature difference between any two adjacent points = 60 * Factor(function of the temperature difference) ; Temperature factor = 0 for a ΔT of 28 °C or less.	0
$N_{\Delta T\alpha}$	Number of temperature cycles for components involving welds between materials having different CTE that causes the value of $(CTE_{mat1}-CTE_{mat2})\,\Delta T$ to exceed	60
Total Cycle Count		300

- **Fatigue analyses not required for the cavity**

D(ii)- Protection Against Failure from Cyclic Loading- Ratcheting Evaluation

Analysis Procedure

Applied the following loading:

No of cycles = 20

» First Step up to MAWP * 1.15 and tuner displacement = 1.2 mm

» Remaining steps to MAWP and tuner displacement = 1.2 mm

» Gravity Load in all steps

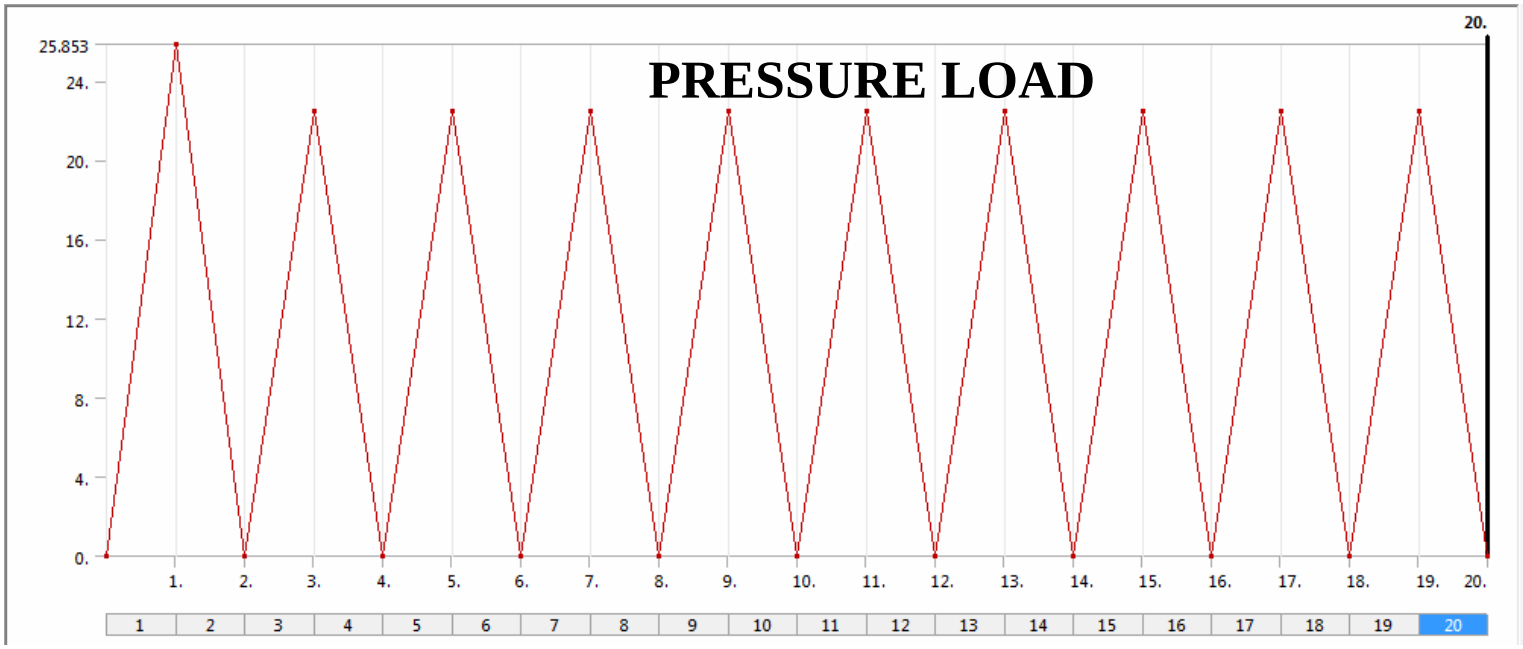

	Steps	Time [s]	Pressure [psi]
1	1	0.	0.
2	1	1.	25.853
3	2	2.	0.
4	3	3.	22.481
5	4	4.	0.
6	5	5.	22.481
7	6	6.	0.
8	7	7.	22.481
9	8	8.	0.
10	9	9.	22.481
11	10	10.	0.
12	11	11.	22.481
13	12	12.	0.
14	13	13.	22.481
15	14	14.	0.
16	15	15.	22.481
17	16	16.	0.
18	17	17.	22.481
19	18	18.	0.
20	19	19.	22.481
21	20	20.	0.
*			

D(ii)- Protection Against Failure from Cyclic Loading- Ratcheting Evaluation (cont.)

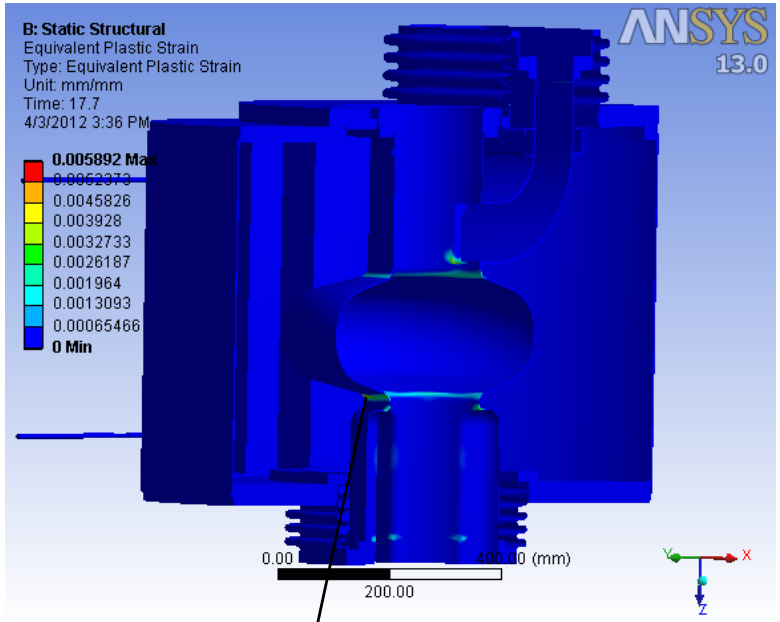

Maximum plastic strain near the cavity iris

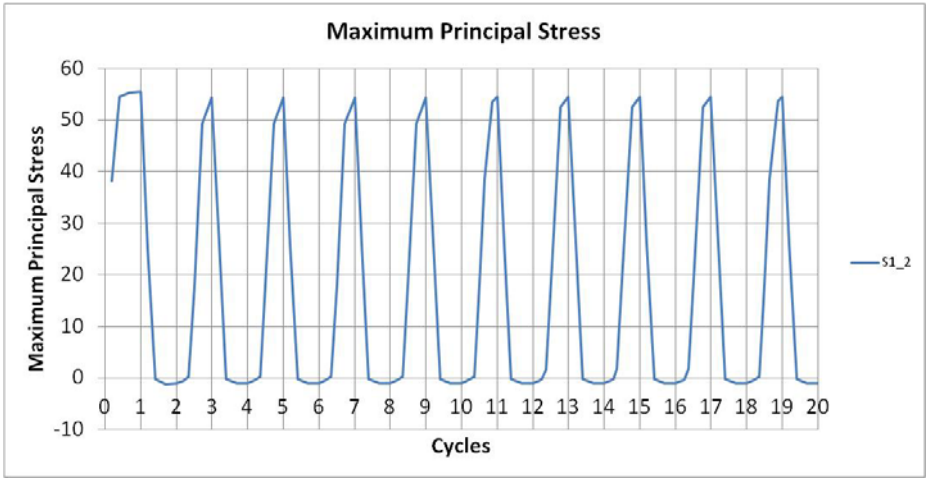

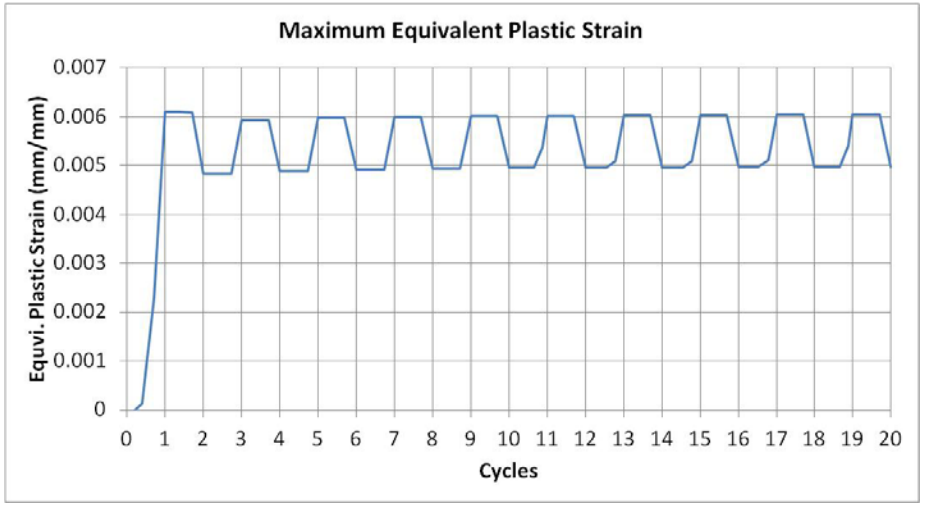

Plastic strain and the Maximum Principal Stress is the same in the last two cycles indicating a stable hysteresis loop and hence design is protected against "Ratcheting" failure.

Helium Vessel-Burst Disk Sizing

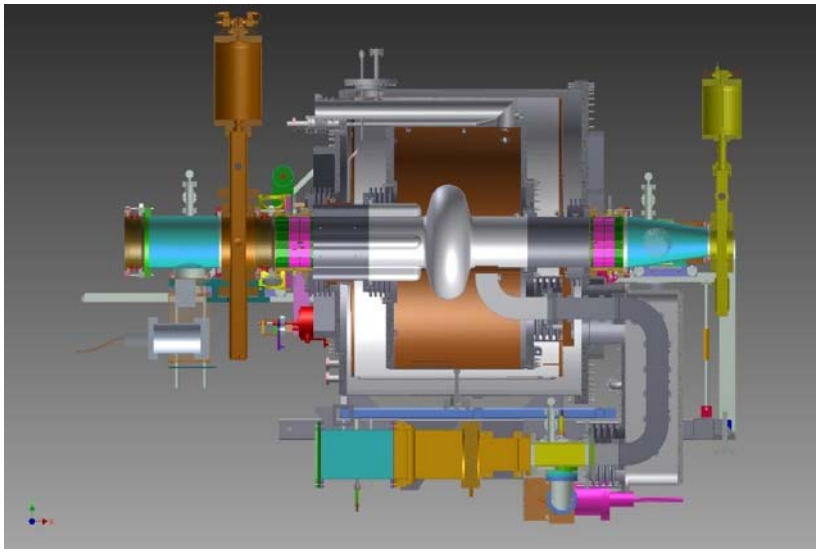

Burst Disk Set Pressure = 1.55 Bar.A

Ref: Lehmann and Zahn, "Safety Aspects for LHe Cryostats and Lhe Transport Containers", ICEC7, London, 1978	
Max. Heat Flux for insulated surface	6000 W/m^2
Max. Heat Flux for uninsulated surface	38,000 W/m^2

Burst disk sizing dictated by:
Case 1: Air fills up the niobium cavity (bare metal surface) due to vacuum breach. Surface area = 1.86 m^2
Case 2: Air fills up the insulating vacuum space and contacts the insulated helium vessel surface. Surface area = 3.52 m^2

- **Worst Case Heat Input – Air fills up cavity: 70.68 kW**
- **Required Relief Flow Rate =$\left({}^{70.68}/_{16.6}\right) * \left(1 - {}^{27.3}/_{113.3}\right)$ = 3.23 kg/s**
- **Burst Disk Type: Fike Axius Low Pressure Burst Disk with a Kd value of 0.45**
- **Minimum Net Flow Area (MNFA) of 7.39 in^2 (3.06 in orifice size)**

Conclusions

- In the US, the Code of Federal Regulations 10 CFR 851 requires national laboratories to ensure a level of safety greater than or equal to that provided by ASME or applicable state or local code
- Complicated RF cavity geometry made of niobium (a non ASME material) can be analyzed using the rules provided in ASME VIII-Div.2 “Design by Analyses”
- FEA can be used as a tool for analyzing various failure modes and ASME Div. 2, Part 3, Annex 3D can be applied to develop non-linear stress-strain curves needed for the analyses.

Back-up

CESR-B Helium Vessel Relief

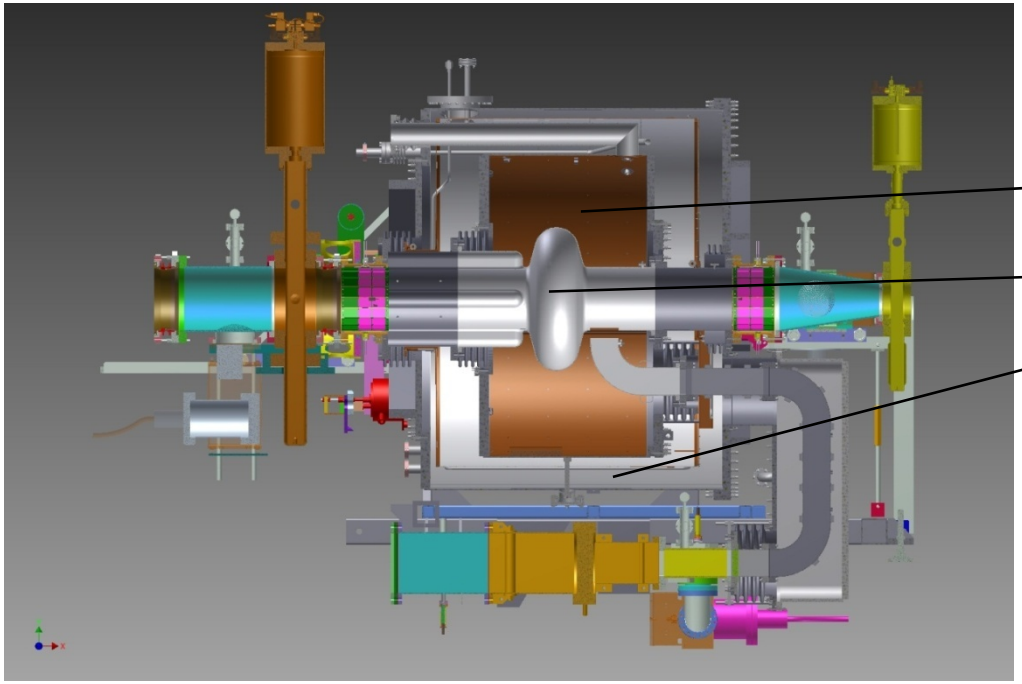

MAWP of the Cavity = 1.55 Bar.A.

Helium Vessel

Niobium Cavity

Insulating Vacuum Vessel

Relief system:

- **Helium Vessel**
  - **Burst Disk- 1.55 Bar.A- Catastrophic vacuum breach**
  - **Pressure relief- 1.4 Bar.A – Process relief**
- **Vacuum Vessel**
  - **Lift Plate -Catastrophic vacuum breach**

Helium Vessel-Burst Disk Sizing

Step#1: Estimate the Heat Input to the cryogen ?

Step#2: Estimate the required relief mass flow rate

Ref: ISO 21013-3- International standard for relief valve sizing:

a. Relief Pressure is less than 40% of the critical pressure

Mass flow rate (kg/s) = Heat Load (W)/Latent Heat (J/kg)

b. Relief Pressure is equal or greater than 40% of the critical pressure

Mass flow rate (kg/s) = (Heat Load (W)/Latent Heat (J/kg)*(1-ρG/ρL)

c. Therefore requirement relief mass flow rate

= (70.68/16.6)*(1-27.3/113.3)

= 3.23 kg/s

Step#3: Estimate the required relief discharge area

Ref: API Standard 520 Part-1:

a. Sub-Sonic Flow (Down Stream pressure > Critical flow Pressure)

$$A = \frac{17.9 * W}{F_2 K_d K_c} \sqrt{\frac{TZ}{M * P_1 (P_1 - P_2)}}$$

a. Sonic/Choked Flow (Down Stream pressure ≤ Critical flow Pressure)

$$A = \frac{W}{C K_d P_1 K_b K_c} \sqrt{\frac{TZ}{M}}$$

CESR-B RF Cavity-Wall thickness

Wall thickness based on etching tolerance of 200 microns

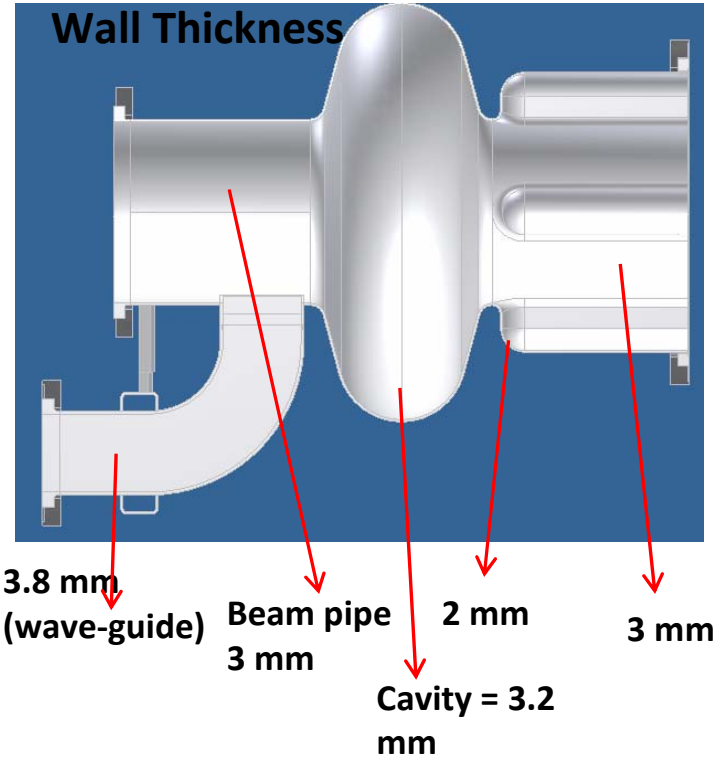

Component Name	Wall Thickness (mm)
Waveguide	3.8
Beam Pipe	3
Cavity Wall	3.2
Fluted Beam Pipe	3
Flutes	2

Ratcheting Evaluation-at 4K due to cool-down (cont)

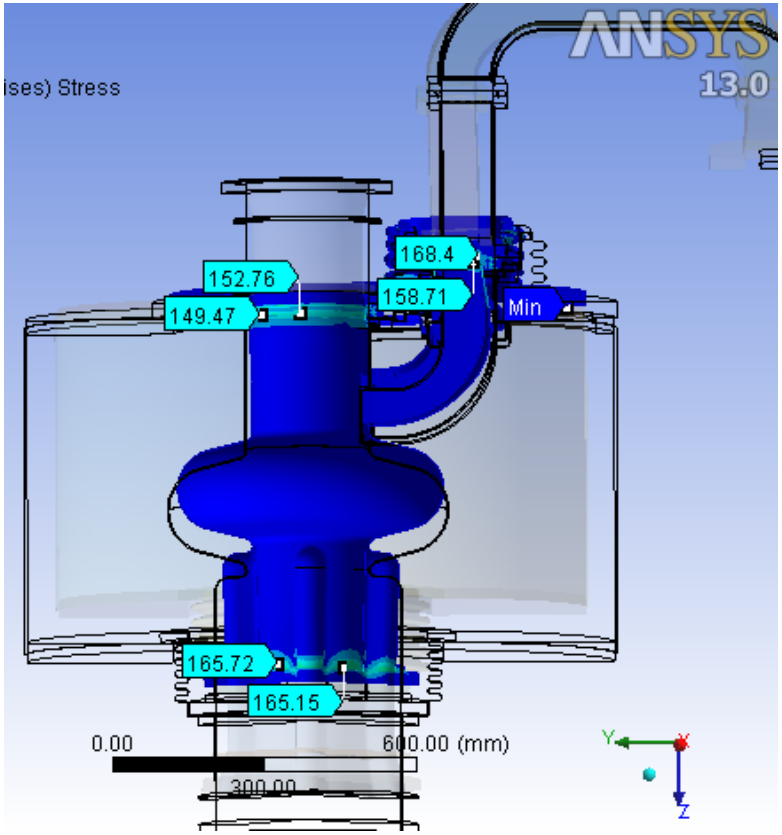

Maximum thermal stress = 170 MPa

Room Temperature Min.Yield Strength of NbTi = 410 Mpa

Room Temperature Min. Yield Strength of Stainless Steel = 205 MPa

Allowable Limit for secondary stresses = 2Sy

Thermal stresses at the interface are well below the conservative strength for niobium and stainless steel at room Temperature

Insulating Vacuum Vessel-Lift Plate

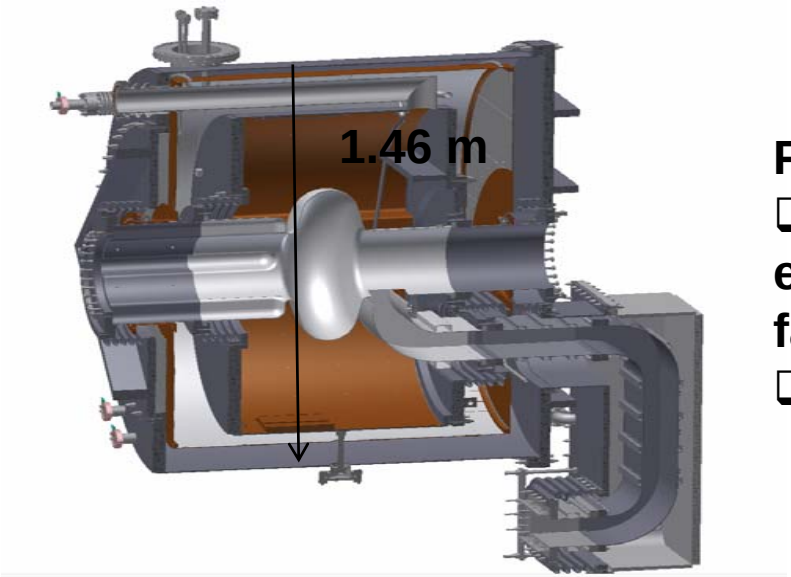

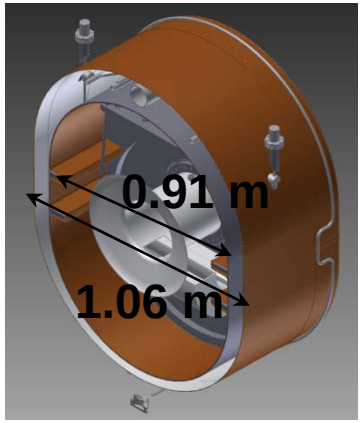

Failure Scenario:

- **Catastrophic breach of the helium vessel, entire liquid helium inventory of 410 L will fall on the 77 K thermal shield surface.**
- **System Pressure would rise due to:**
  - **Liquid boil off rate due to film boiling phenomenon corresponding to a ΔT = 72.6K (77-4.2 K)**
  - **Helium gas expansion rate due to heat absorbed by free convection**

Insulating Vacuum Vessel-Lift Plate

A. Heat Flux –Pool Boiling of Liquid Helium based on the correlation of Breen and Westwater, for ΔT = 70 K

q = 26.72 kW/m^2

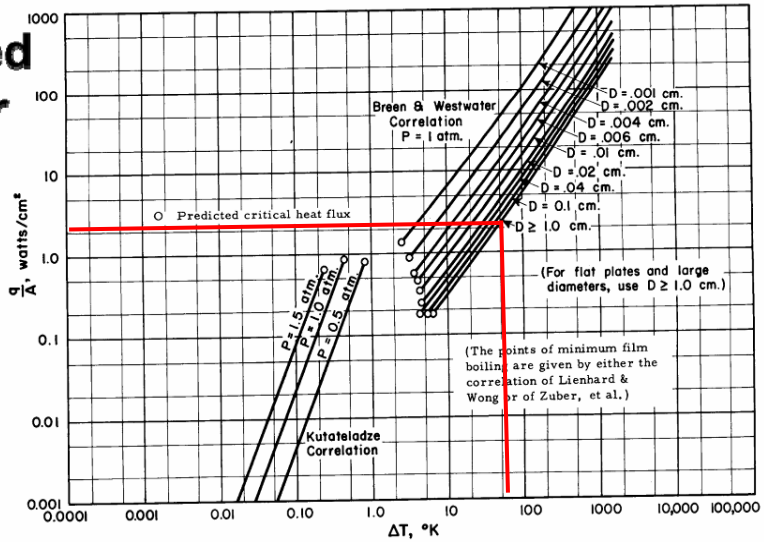

B. Free convective heat transfer coefficient

$$h = (Nu * kf)/L$$

$$Nu = 0.4 * \left[\frac{(D_2/D_1) - 1}{\ln\left(\frac{D_2}{D_1}\right)}\right](GrPr)^{0.2}$$

C. For a Relief Pressure of 2 Bar.A and Relief Temperature of 5.07 K

Required relief flow rate = Liquid boil off rate + volumetric expansion of the gas = 7 kg/s

D. Required orifice size = 2.76 inches