Thermal and Deformation Analyses of the New 2.4 T Multipole Wiggler Vacuum Vessel at Siam Photon Source

M. Sophon
Accelerator Technology Division
Technical and Engineering Division

Outline

1. **Introduction**
   - How shall we get the 2.4 T multipole wiggler?
   - Basic idea for multipole wiggler vessel design.
2. **Design consideration**
   - Vertical aperture consideration
   - The vacuum vessel dimension and operating gap
   - MPW vessel vacuum pressure
3. **The Finite Element Analysis**
   - Preparation for Installation
   - How to make the simplified model
   - Material properties and Boundary conditions
   - Simulation results
4. **Discussion & Conclusions**

Introduction

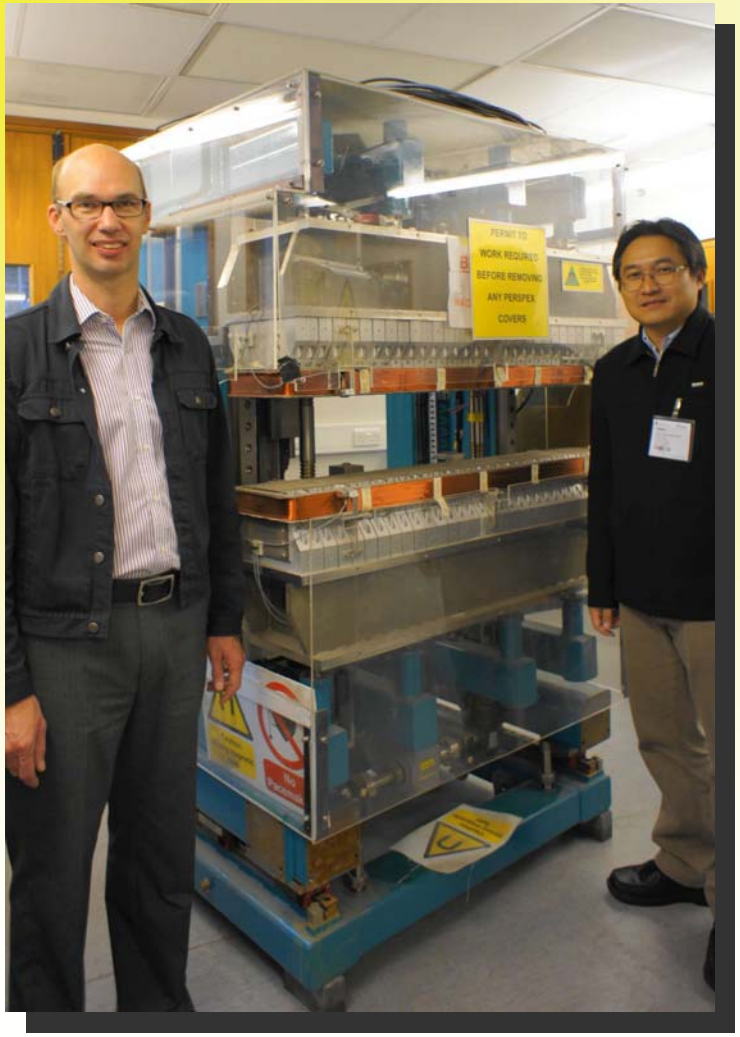

The 2.4 T multipole wiggler which will be lent to SPS by ASTeC, Daresbury Laboratory, UK. Fruitful discussions were held between Jim Clarke, Clive Hill, Andy Gallagher, Ian Mullacrane, and the visitors from Thailand

Prof. Jim Clarke and Dr. Prayoon Songsiriritthigul standing next to the 2.4 T multipole wiggler, August 4, 2011.

Refs:
http://www.stfc.ac.uk/astec/36264.aspx

Introduction

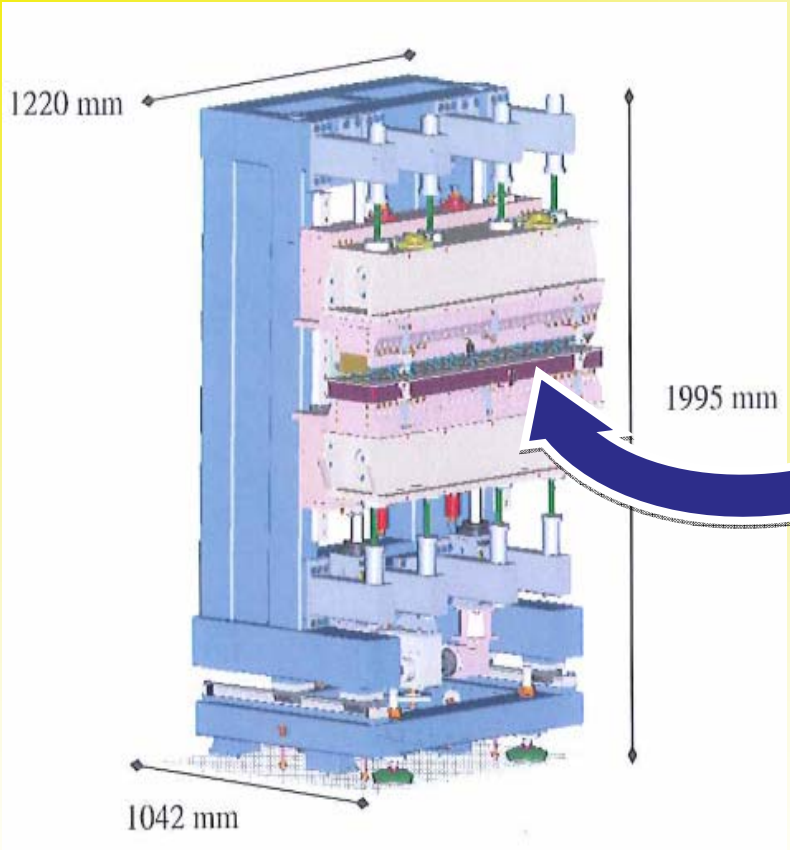

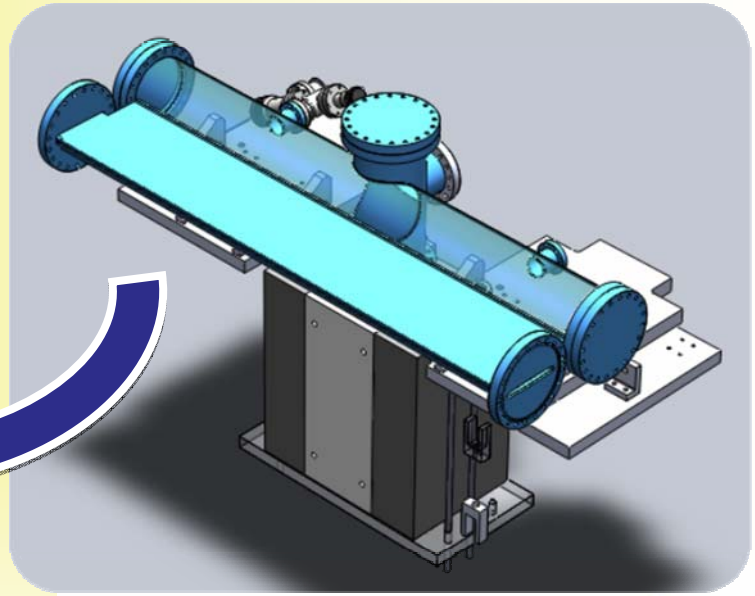

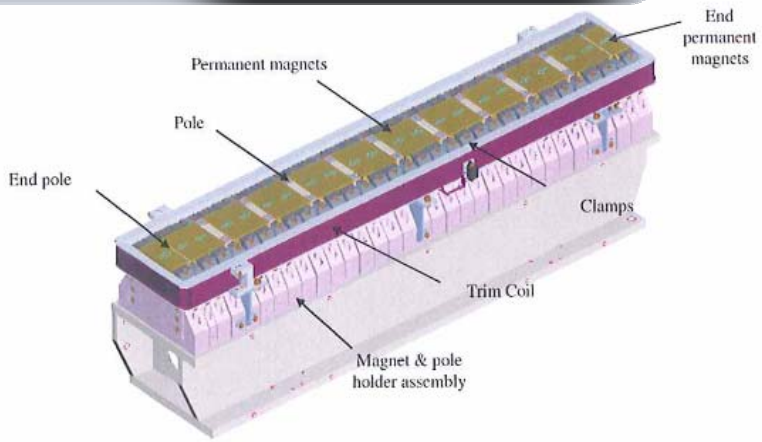

MPW was originally designed to produce the high magnetic field for a permanent magnet-based 2.4 T with an operating gap of 20 mm

Refs:

Link: http://www.stfc.ac.uk/astec/36264.aspx

Hannon, F. F.: ASTeC-ID-02, “Magnetic Field Measurements of the SRS 2.4 T Multipole Wiggler”

Design consideration

1. The location for MPW installation in the ring (mm)

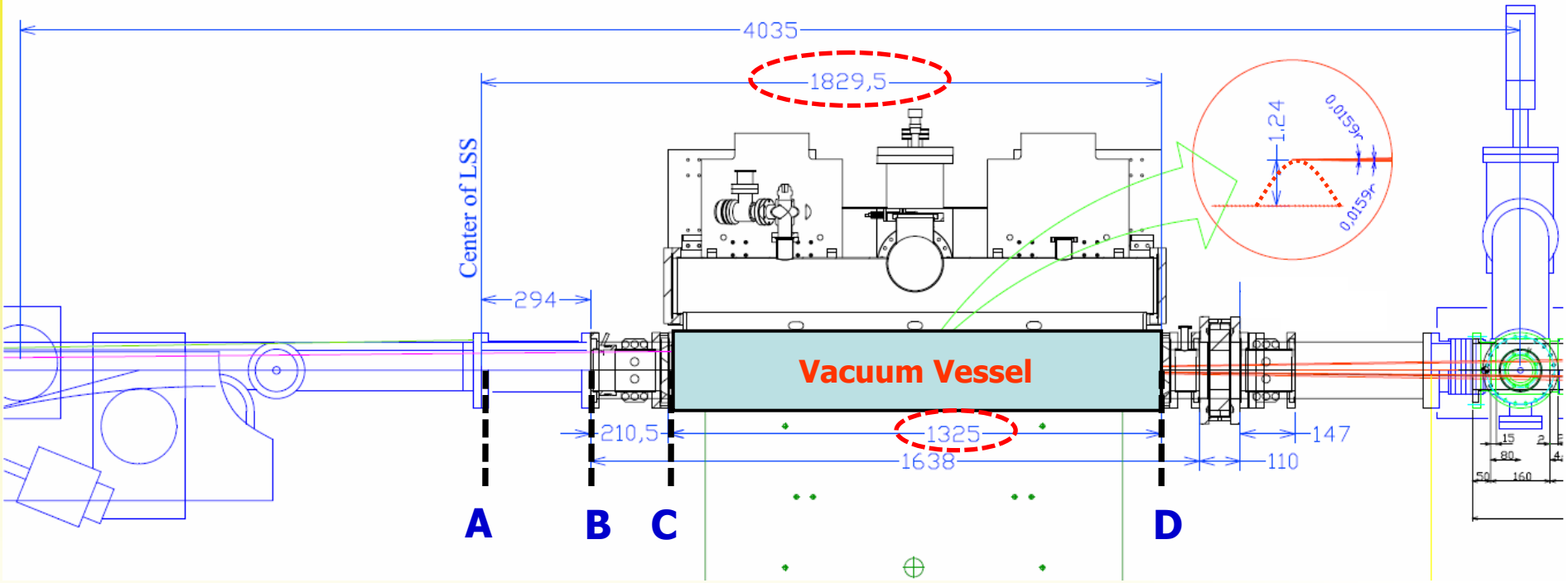

	A	B	C	D
Vertical aperture	**14.774mm**	**14.836mm**	**14.957mm**	**17.018mm**

the interior vertical size of vessel was designed to be 18 mm.

Refs:

G. Isoyama, “Physical Aperture of the Vacuum Duct for PMW”, slri, 2011

Design consideration

2. The vacuum vessel dimension and operating gap (mm)

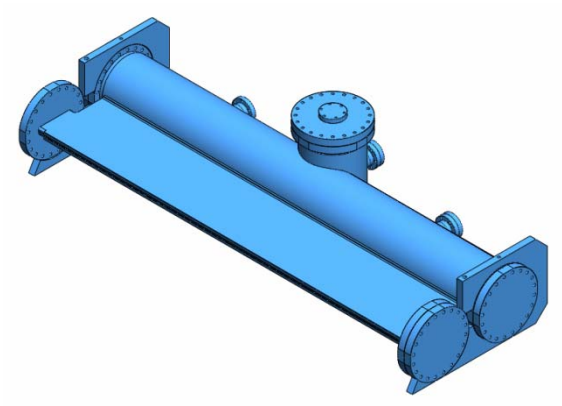

Both vertical and horizontal acceptance of the storage ring are not reduced by the vacuum vessel for the MPW

Peak field [T]	Gap [mm]
2.4	20.0
2.2	23.7
2.1	25.8
2.0	27.9

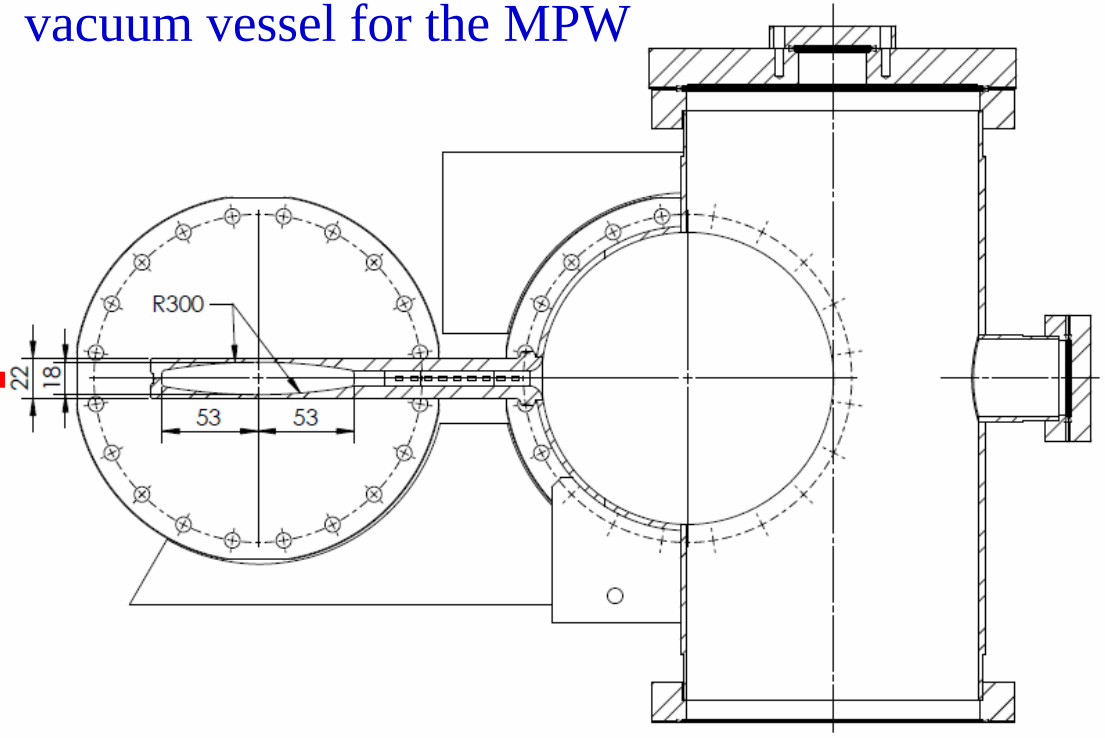

Refs:
Hannon, F. F.: ASTeC-ID-02, “Magnetic Field Measurements of the SRS 2.4 T Multipole Wiggler”

Design consideration

3. MPW Vessel Vacuum Pressure

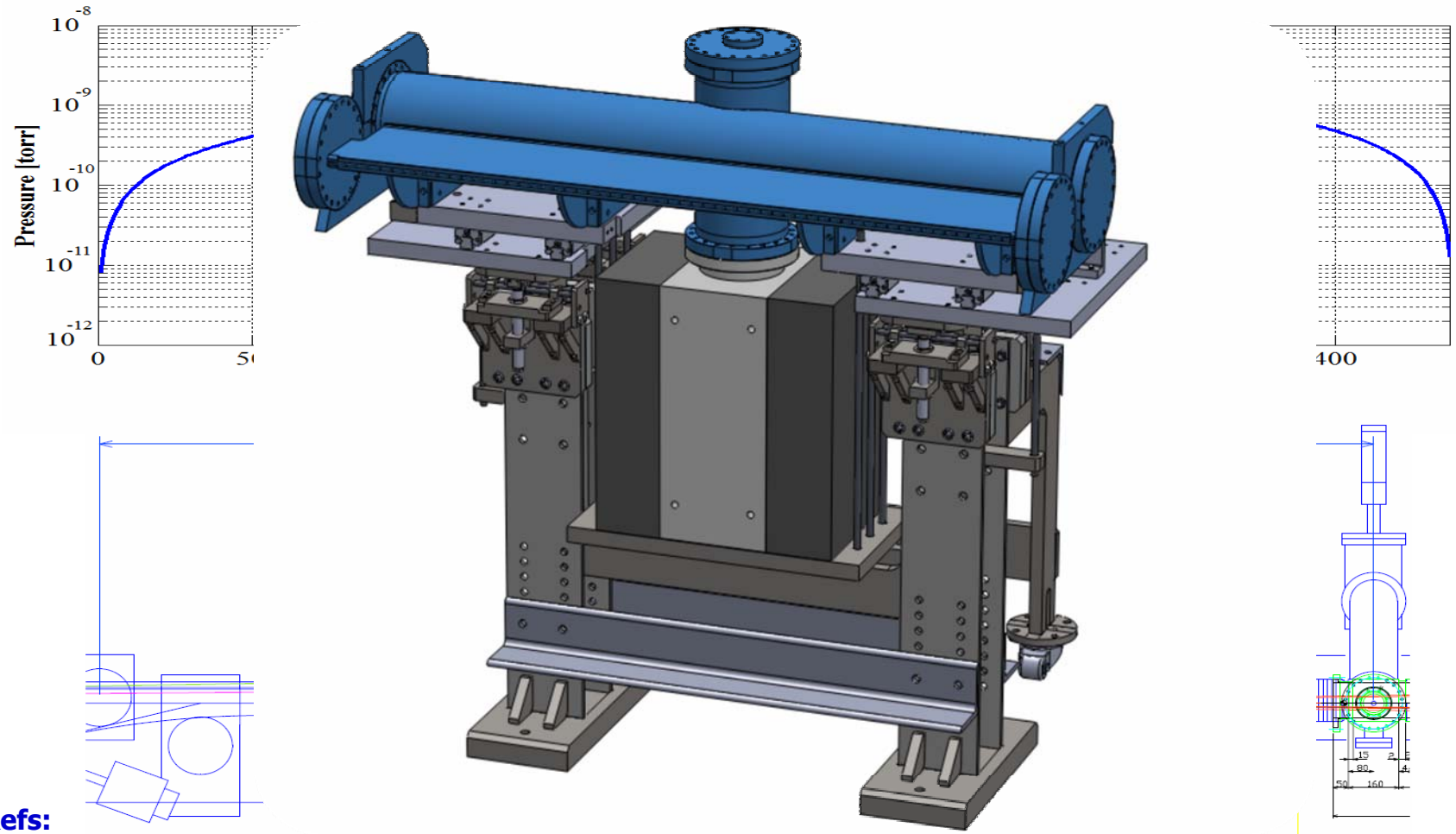

Refs:

O. Gröbner, CERN Accelerator School, General Accelerator Physics, Proceedings (Eds. P. Bryant and S. Turner), Sept 1984, CERN 85-19, p. 489

Finite Element Analysis

1. Preparation for Installation

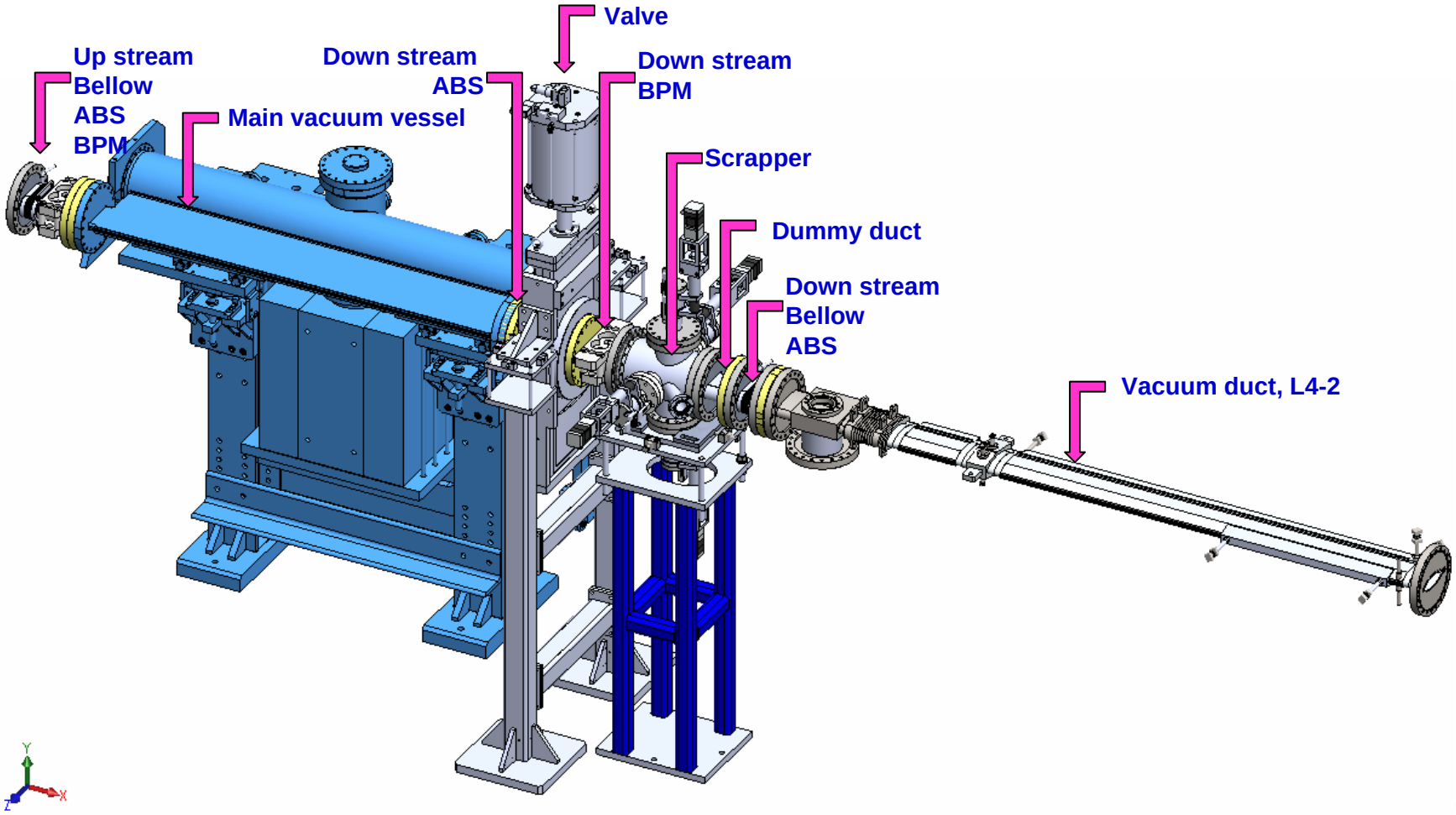

Finite Element Analysis

2. Simplified model

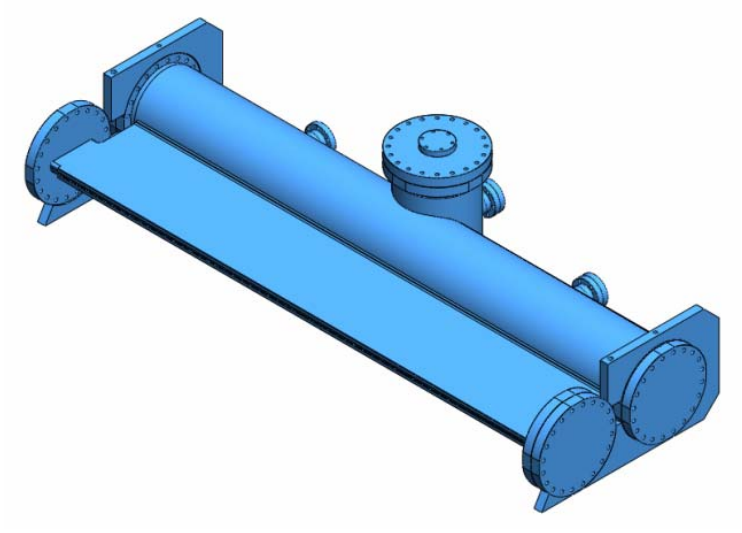

3D model of the vessel

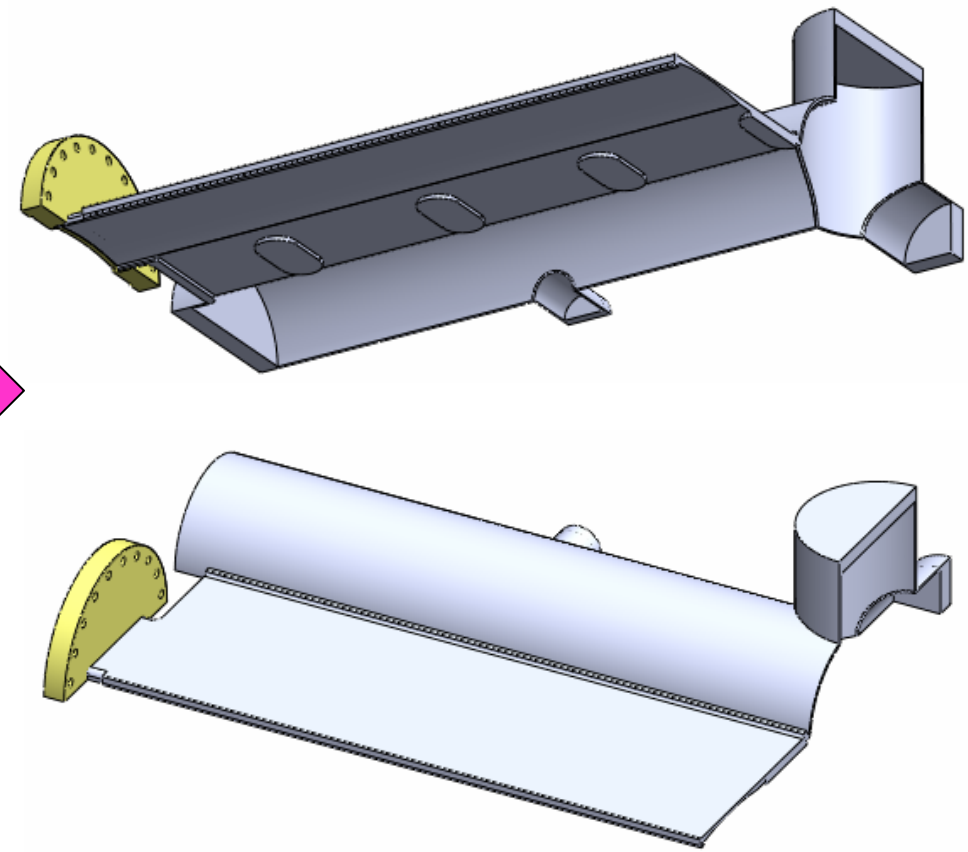

3D model of one quarter of the vessel

Finite Element Analysis

3. Materials properties and Boundary conditions

Property	Value	Units
Elastic Modulus in X	1.93e+011	N/m^2
Poisson's Ration in XY	0.265	N/A
Shear Modulus in XY	8.2e+010	N/m^2
Mass Density	7990	kg/m^3
Tensile Strength in X	558000000	N/m^2
Compressive Strength in X		N/m^2
Yield Strength	290000000	N/m^2
Thermal Expansion Coefficient in X	1.6e-005	/K
Thermal Conductivity in X	16.2	W/(m·K)
Specific Heat	500	J/(kg·K)
Material Damping Ratio		N/A

Apply | Close | Save | Config... | Help

Assumptions:

- Homogeneous and isotropic material
- Global contact (boned) in whole model
- Steady state simulation

Boundary conditions:

- Inside vessel is vacuum, 0 Pa
- Outside vessel is 1 atm, 101,325 Pa
- The gravity acceleration 9.81 m/s^2
- Constant temperature of 115°C and 120 °C for interior and exterior surfaces respectively

Refs:

http://www.lenntech.com/stainless-steel-316l.htm

Finite Element Analysis

4. Simulation result

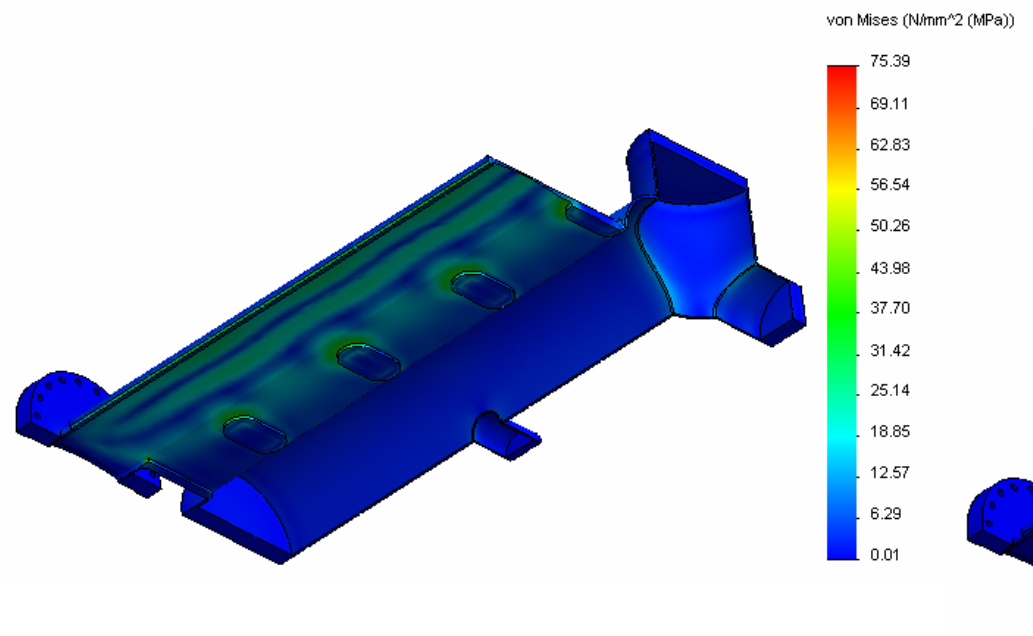

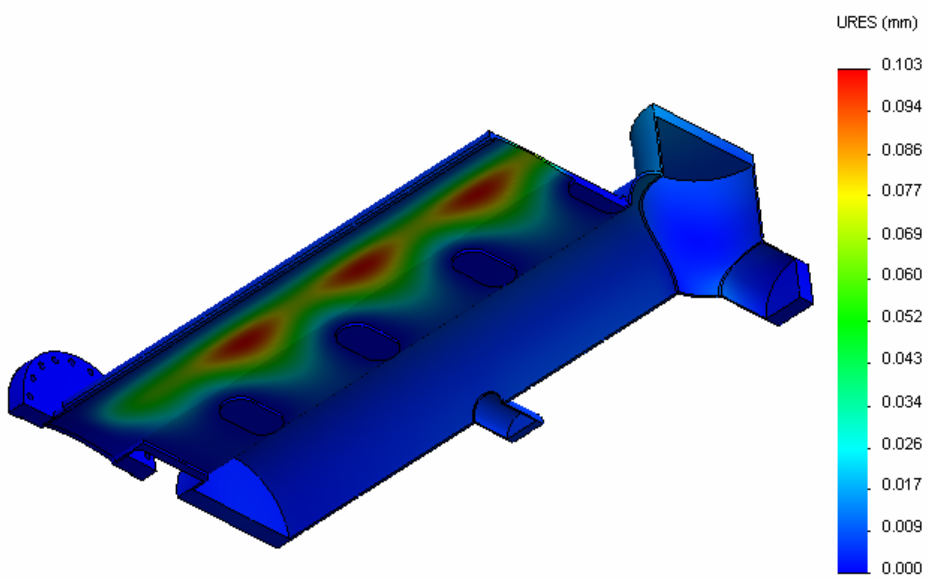

Von Mises stress and deformation(without thermal & gravity effect)contour plot

Finite Element Analysis

4. Simulation result

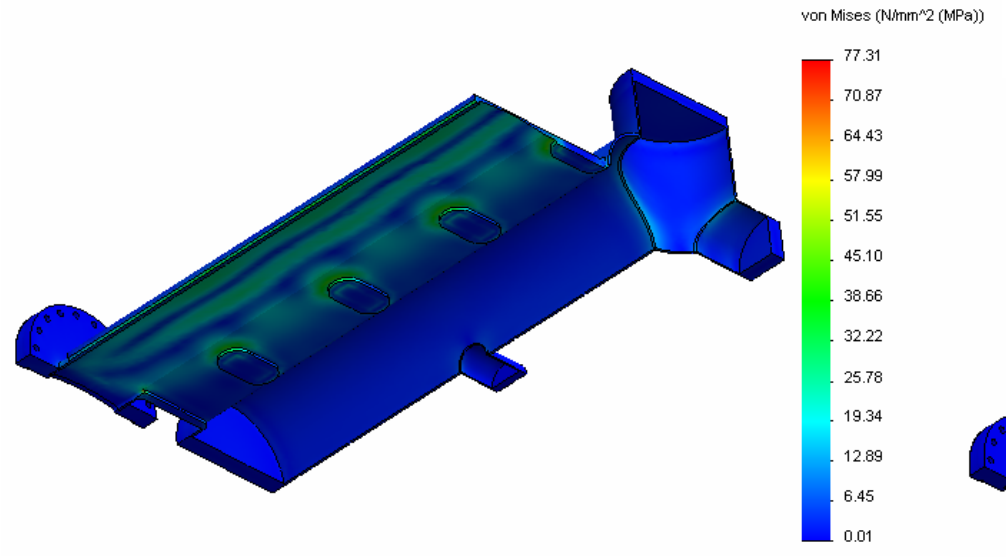

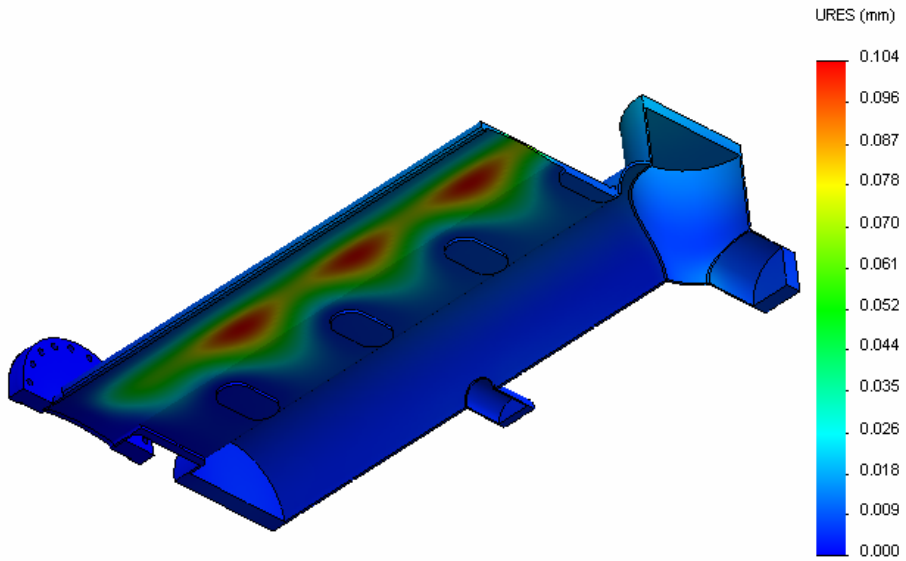

Von Mises stress and deformation(without thermal effect) contour plot

Finite Element Analysis

4. Simulation result

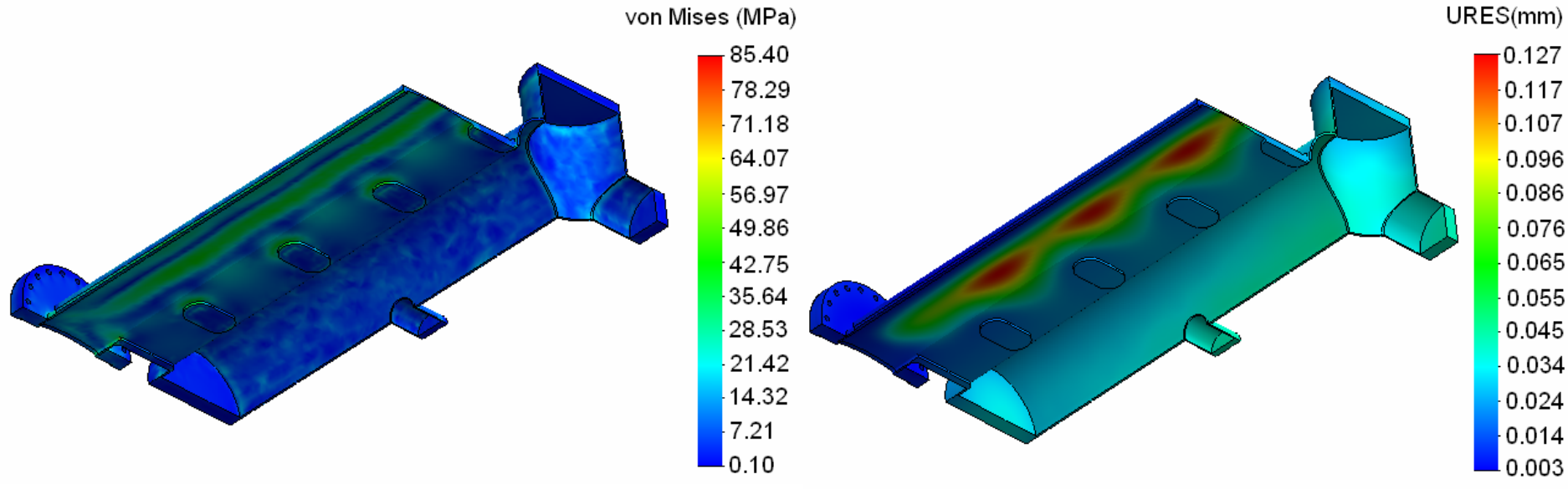

Stress (Left) and Deformation (Right) contour plot on a one quarter model

Discussion & Conclusion

- The vacuum vessel of the MPW of the Siam Photon Source has been designed for a minimum operating gap of 23 mm., 2.2X T

- The exterior vertical size of the vacuum vessel is 22 mm. while the interior vertical size is 18 mm.

- The vertical and horizontal acceptance of the storage ring will not be reduced by the vacuum vessel of the MPW.

- After installation, the pressure in the vessel could be improved by the additional ion pump(500l/s).

- From the simulation, 85.4 MPa is the maximum Von Mises which corresponds to a safety factor of ~ 3.4 when compare to yield stress.

Many thanks to:

- Goro Isoyama.
- Oliver utke.
- S. Klinkhieo
- A. Tong-on
- P. Sudmuang
- P. Klysubun
- Staff of MEDSI2012

Thank you for your attention.