Condition Based Maintenance case study

The cooling circuit pumps at ALBA Synchrotron Light Source

David Carles Brescolí
Infrastructure Section Head
CELLS – Engineering Division
dcarles@cells.es

Agenda

1. The cooling circuit pumps at ALBA and its preventive maintenance status. Moving to predictive approach.

2. Vibration monitoring evolution. Compare data taken before and after the corrective. Problems still appearing after interventions.

3. Launching an inside Engineering Division project.
   - Results: Modal Analysis (Natural Frequencies)

4. Conclusions and next steps.

Agenda

1. **The cooling circuit pumps at ALBA and its preventive maintenance status. Moving to predictive approach.**

2. Vibration monitoring evolution. Compare data taken before and after the corrective. Problems still appearing after interventions.

3. Launching an inside Engineering Division project.
   - Results: Modal Analysis (Natural Frequencies)

4. Conclusions and next steps.

General layout of ALBA facility

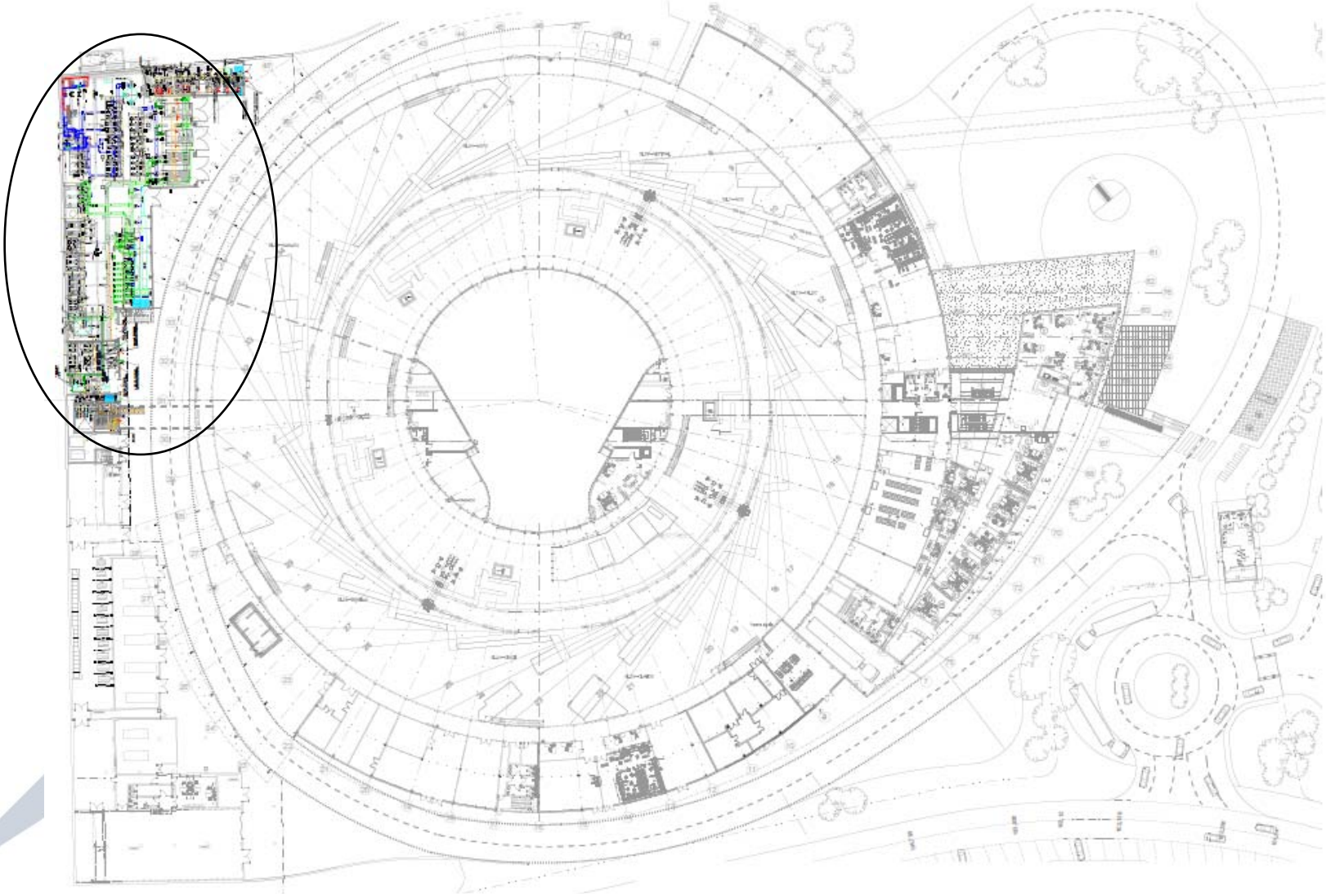

The cooling circuit pumps

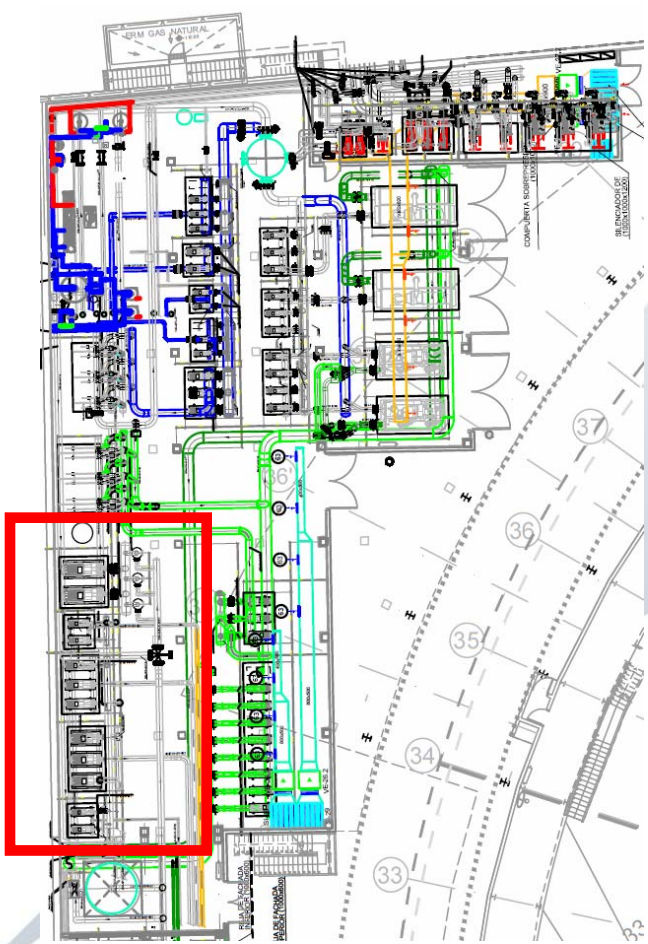

	FLOW (m3/h)	High (Kpa)	Power Kw	Config num.	Models	Inlet (mm)	Outlet (mm)	Vel rpm
P07	84	1010	45	1+1	NM-65/250B	100	65	3000
P08	127	1340	90	2+1	INP-80/315C	125	80	3000
P09	38	1150	37	1+1	NM-50/315BR	80	50	3000
P10	104	1030	75	2+1	NM-65/315BR	100	65	3000
P11	646	230	75	1+1	INP-250/300C	250	250	1500

There is a problem at pumps

- The current preventive maintenance scheme implemented showed us that there is a problem with the cooling pumps.

Activo	Denominación Activo	Número OT	Denominación OT	Fecha
IDWXXAP08-C	ELECTROBOMBA P08-C	966	ALINEACIÓN	27/07/2010
IDWXXAP11-A	ELECTROBOMBA P11-A	969	ALINEACIÓN	27/07/2010
IDWXXAP11-B	ELECTROBOMBA P11-B	972	ALINEACIÓN	11/10/2010
IDWXXAP10-A	ELECTROBOMBA P10-A	973	ALINEACIÓN	05/11/2010
IDWXXAP10-B	ELECTROBOMBA P10-B	974	ALINEACIÓN	05/11/2010
IDWXXAP10-B	ELECTROBOMBA P10-B	975	CAMBIO RODAMIENTOS BOMBA	28/11/2010
IDWXXAP08-B	ELECTROBOMBA P08-B	976	ALINEACIÓN	20/04/2011
IDWXXAP08-C	ELECTROBOMBA P08-C	977	ALINEACIÓN	20/04/2011
IDWXXAP10-A	ELECTROBOMBA P10-A	978	ALINEACIÓN	20/04/2011
IDWXXAP10-B	ELECTROBOMBA P10-B	1259	ALINEACIÓN	20/04/2011
IDWXXAP09-A	ELECTROBOMBA P09-A	1260	CAMBIO RODAMIENTOS BOMBA	19/05/2011
IDWXXAP10-C	ELECTROBOMBA P10-C	1261	ALINEACIÓN	20/10/2011
IDWXXAP10-C	ELECTROBOMBA P10-C	1263	ALINEACIÓN	20/10/2011
IDWXXAP09-B	ELECTROBOMBA P09-B	949	CAMBIO RODAMIENTOS BOMBA	02/04/2012
IDWXXAP08-C	ELECTROBOMBA P08-C	1410	EQUILIBRADO EJE Y RODETE	22/06/2012
IDWXXAP08-C	ELECTROBOMBA P08-C	1401	EQUILIBRADO RODETE Y EJE BOMBA	22/06/2012
IDWXXAP08-B	ELECTROBOMBA P08-B	1402	REALIZAR ALINEACIÓN DE MOTOR-BOMBA	29/06/2012
IDWXXAP10-A	ELECTROBOMBA P10-A	1403	REALIZAR ALINEACIÓN Y ANAL.VIBRACIONES	03/07/2012
IDWXXAP11-A	ELECTROBOMBA P11-A	1404	REVISIÓN Y REAPRIETE BOMBA Y MOTOR	04/07/2012
IDWXXAP08-A	ELECTROBOMBA P08-A	1412	CAMBIO RODAMIENTO MOTOR LA	09/07/2012
IDWXXAP08-B	ELECTROBOMBA P08-B	1416	REPARACIÓN RODAMIENTO LA MOTOR	10/07/2012
IDWXXAP08-C	ELECTROBOMBA P08-C	1424	ALINEACIÓN EN CALIENTE Y PREDICTIVO	18/07/2012

Agenda

1. The cooling circuit pumps at ALBA and its preventive maintenance status. Moving to predictive approach.

2. **Vibration monitoring evolution. Compare data taken before and after the corrective. Problems still appearing after interventions.**

3. Launching an inside Engineering Division project.
   - Results: Modal Analysis (Natural Frequencies)

4. Conclusions and next steps.

Machine vibration monitoring introduction

Within predictive machine maintenance, vibration monitoring is one of the most used techniques. It provides the following advantages:

- Vibration magnitude is proportional to the magnitude of the problem
- Vibration measurement is non-invasive
- Most faults show increased vibration in an early stage of the deterioration sequence
- Vibration can be measured instantaneously
- Vibration can indicate severity and deterioration rate of a fault
- Vibration can help to find the location of the fault
- Vibration can help to find the cause of the fault

Machine Vibration is generated in server ways:

- Operating machinery produces vibration due to its rotational or linear motion
- Increasing trends towards a higher level indicate emerging problems
- Typical problems arise through
  - misalignment of drive train components
  - worn or damaged bearings
  - load asymmetry due to debris adhesion on rotary parts like fans etc.
  - incorrect assembly
- Vibration generally occurs with its major component perpendicular to the rotational axis of the load transmission shaft
- The amount of vibration depends on
  - the stiffness and geometry of the machine's structure
  - the machine foundation
  - the speed of rotation of the shaft

Reference Standard ISO 10816

- The standard gives recommendations for the evaluation of machine vibration on non rotating parts.

Severity		Range Limits and Machine Classes ISO Standard 10816-3 (2009)				Severity	
r.m.s. displacement µm	r.m.s. velocity mm/s	Group 2: Medium Sized Machines		Group 1: Large machines		r.m.s. velocity mm/s	r.m.s. displacement µm
		Rigid	Flexible	Rigid	Flexible		
22	1,4	A	A	A	A	2,3	29
37	2,3						
45	2,8	B	B	B		3,5	45
71	4,5	C				4,5	57
113	7,1		C	C	B	7,1	90
		D	D	D	C	11,0	140
					D		

Group 1:	Large machines with rated power above 300 kW and not more than 50 MW; electrical machines with shaft height H ≥ 315 mm. These machines normally have sleeve bearings. The range of operating or nominal speeds is relatively broad and ranges from 120 r/min to 15 000 r/min.
Group 2:	Medium-sized machines with rated power above 15 kW up to and including 300 kW; electrical machines with shaft height 160 mm ≤ H < 315 mm. These machines normally have rolling element bearings and operating speeds above 600 r/min.

Zone A:	The vibration of newly commissioned machines normally falls within this zone.
Zone B:	Machines with vibration within this zone are normally considered acceptable for unrestricted longterm operation
Zone C:	Machines with vibration within this zone are normally considered unsatisfactory for long-termcontinuous operation. Generally, the machine may be operated for a limited period in this condition until a suitable opportunity arises for remedial action.
Zone D:	Vibration values within this zone are normally considered to be of sufficient severity to cause damage to the machine

CBM vibration pattern

Slab	1x
Imbalance	1x
Eccentricity	1x, 2x
Misalignment	1x, 2x, 3x
Double Axis	2x
Roominess	1x, 2x, 3x, 4x,
Bearings – see form	
Supports	0.5x, 1x, 1,5x
Lubrication	0.4, 0.5x
Blades	(1x)* (5=nº blades)

Measurement points

Data taken at horizontal / vertical / axial – several points each one

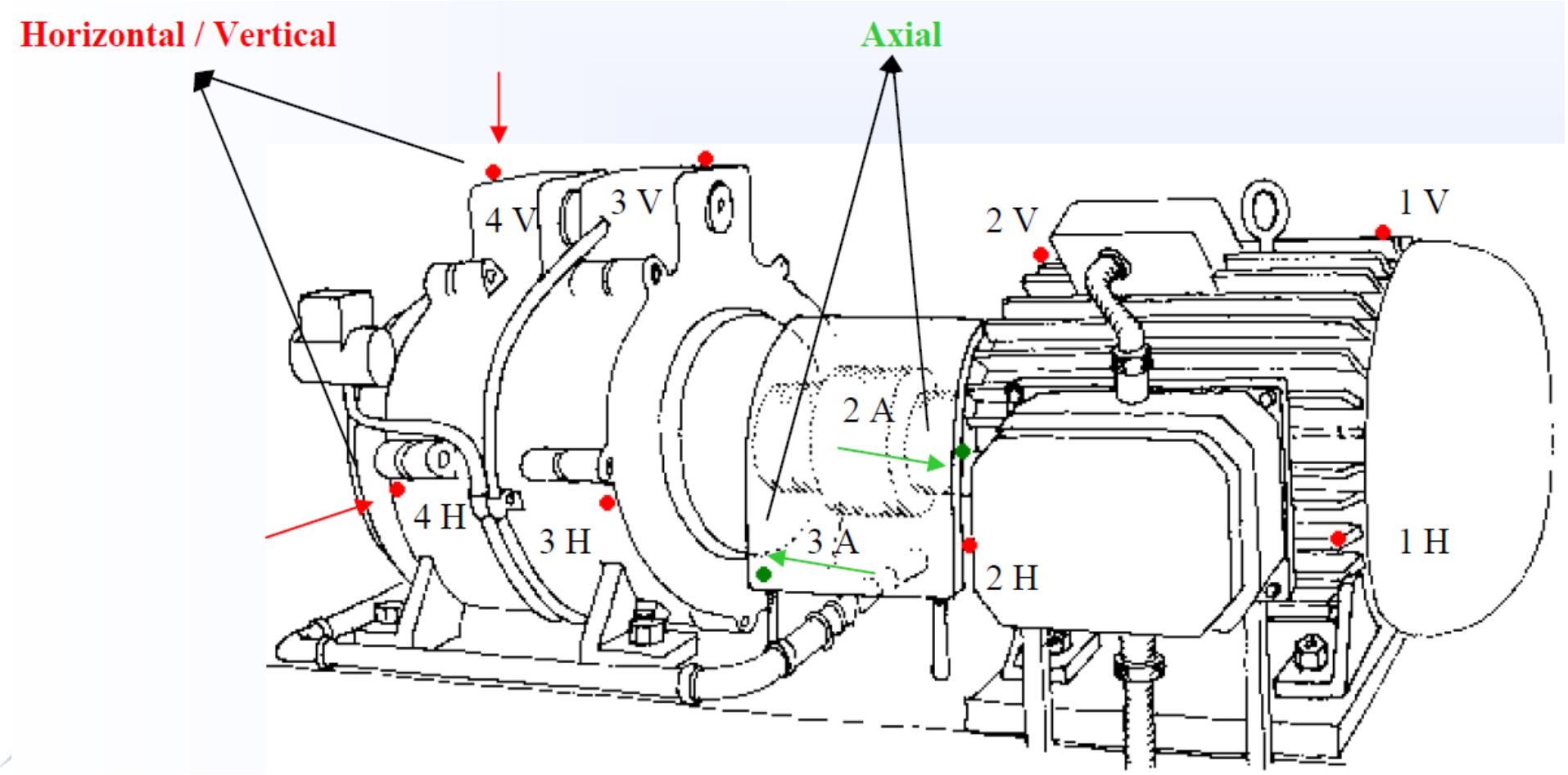

Example measurement at pumps P11

Spectra analyzer GX-70-M

Accelerometer CMSS 2200 of 100 mV/g

BOMBA P 11 B (75 KW 1485 rpm)

PUNTOS	1 H VEL	1 H ENV	1 V VEL	1 V ENV		
P1	3,9	0,92	5,1	0,64		
	2 H VEL	2 H ENV	2 V VEL	2 V ENV	2 A VEL	2 A ENV
P2	5,1	0,54	8,1	0,6	4,8	0,59
	3 H VEL	3 H ENV	3 V VEL	3 V ENV	3 A VEL	3 A ENV
P3	15,6	1,21	4,2	1,24	2,6	1,5
	4 H VEL	4 H ENV	4 V VEL	4 V ENV	4 A VEL	4 A ENV
P4	12,6	1,59	4	1,17	2,9	3,09

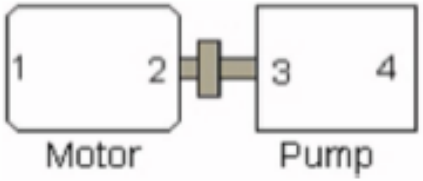

Regular monthly monitoring, no permanent monitoring.

How do we measure and evaluate the vibration?

- Every component, every fault, every hurt associated with some component generates a vibration to a certain frequency. In the example pumb P11B

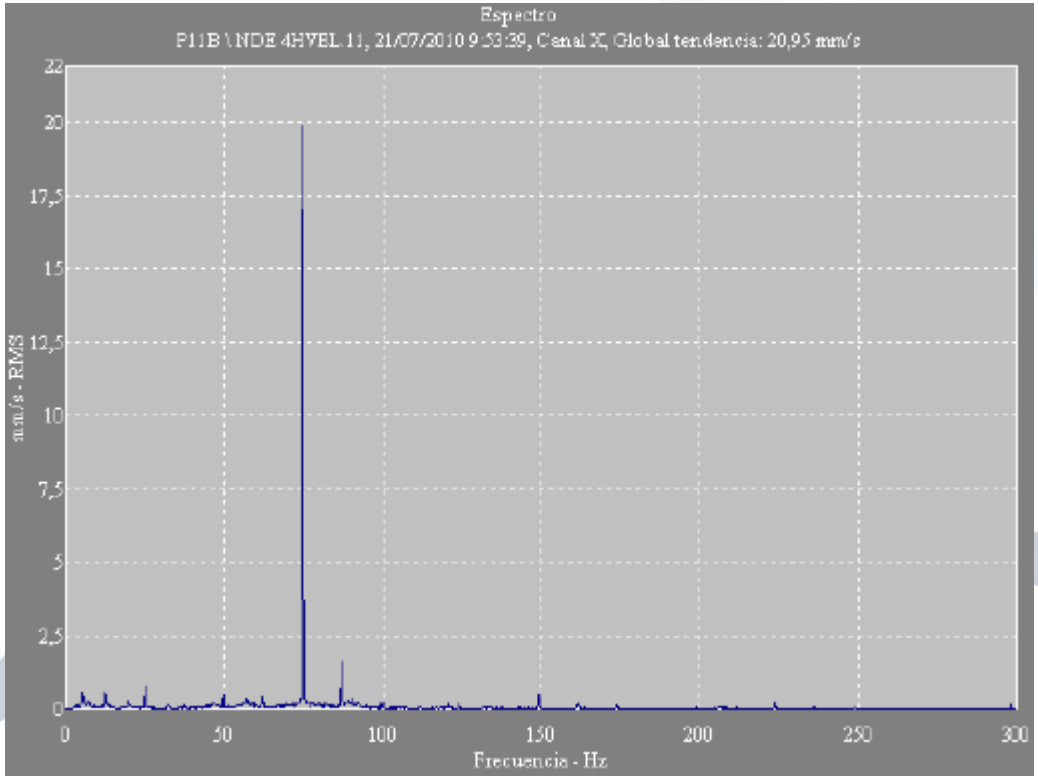

Analysis in frequency: every band of frequency is associated with a certain fault, in this case with a misalignment of the pump P11B.

Correction of the fault

- ACTION: Alignment of the pump P11B. We move the pump horizontally and vertically to correct the misalignment.

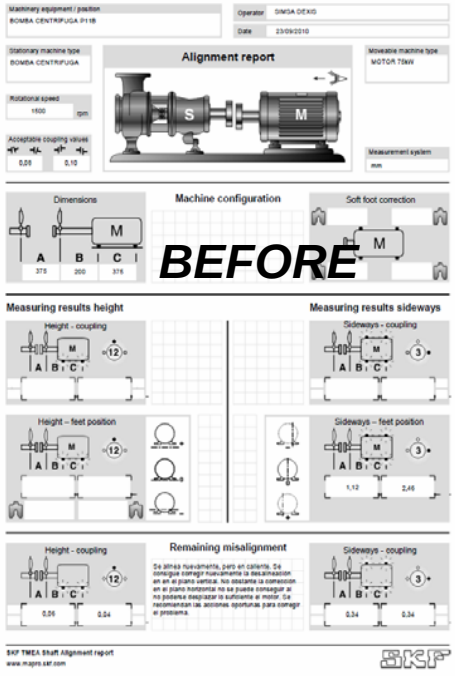

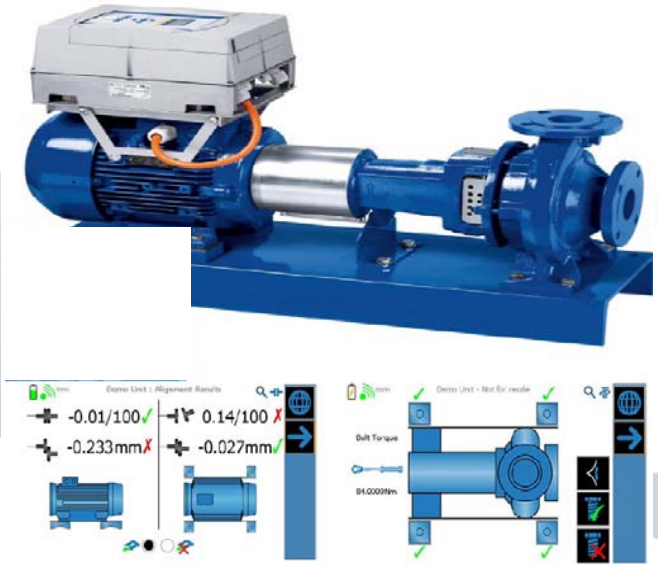

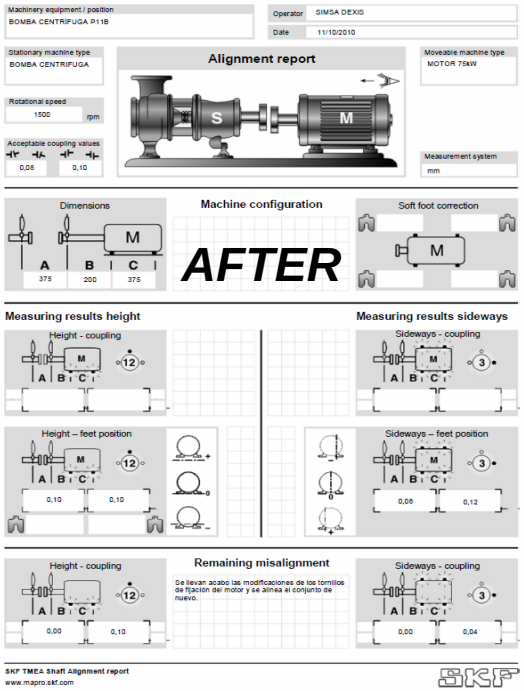

(Typical worksheets of alignment work orders)

Problems still appearing!!

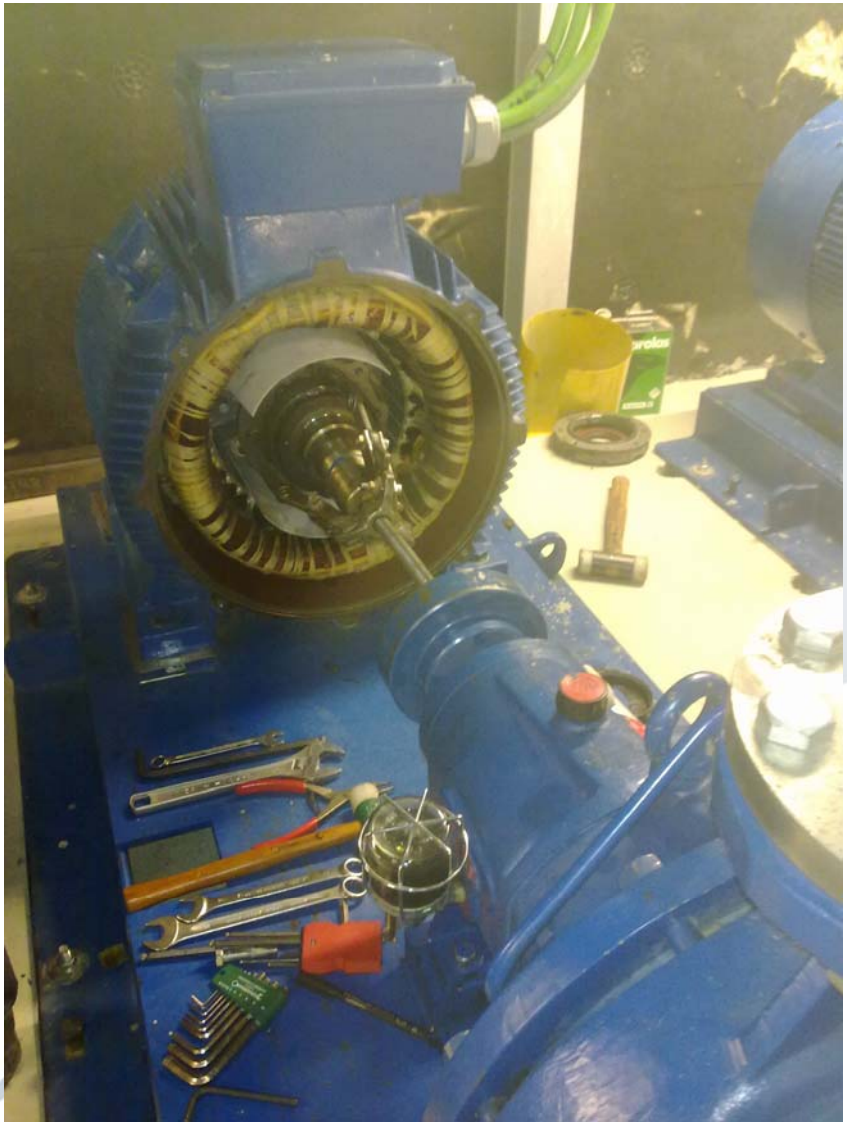

Example: replacement of bearings at vertical axis of the motor at pump P08A, also the shield is damaged

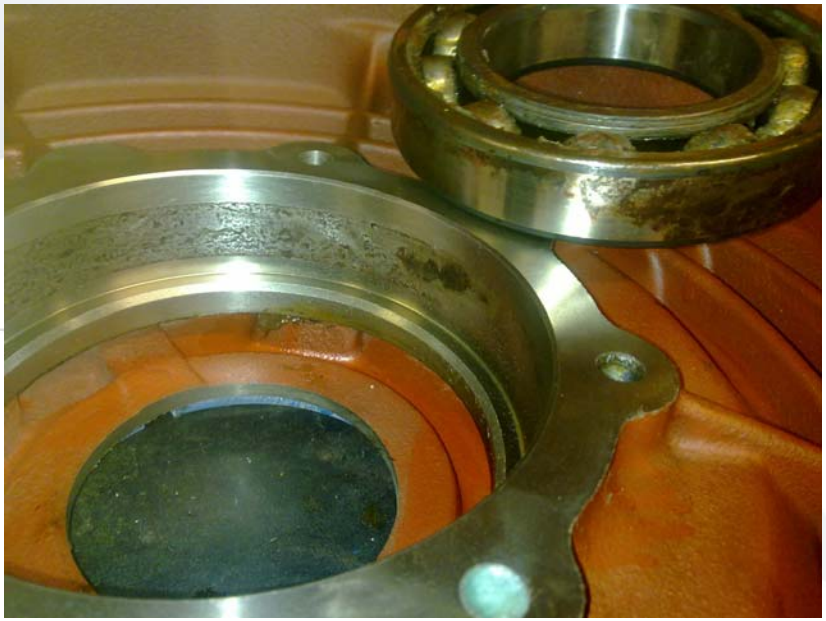

Vibration monitoring evolution

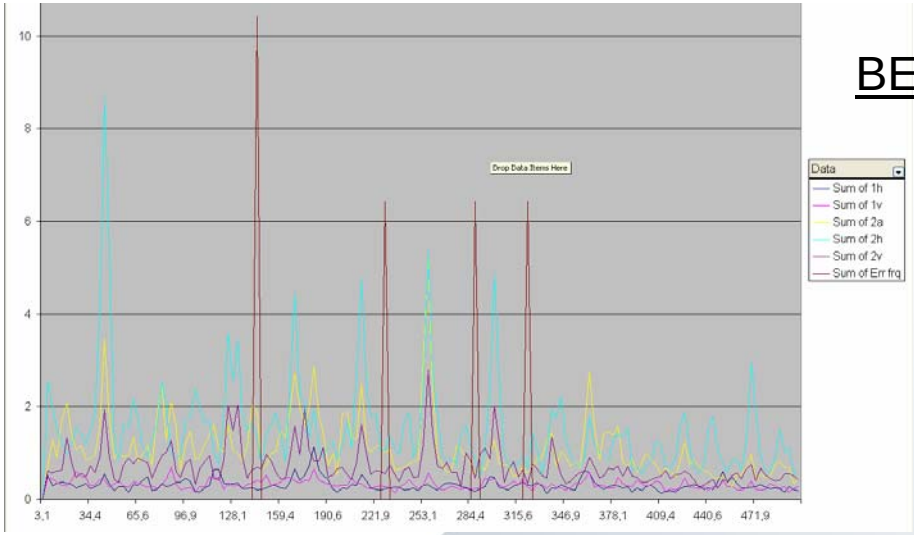

BEFORE replacement of bearings

AFTER replacement of bearings

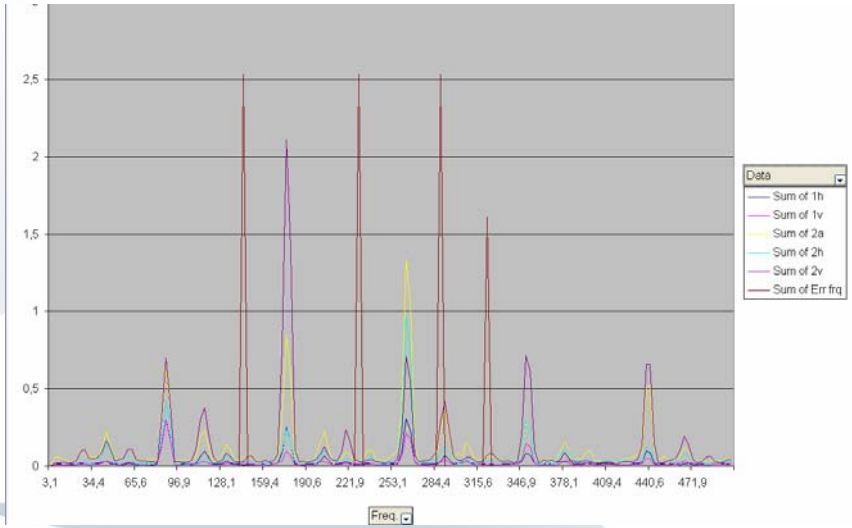

Compare data taken before and after the intervention

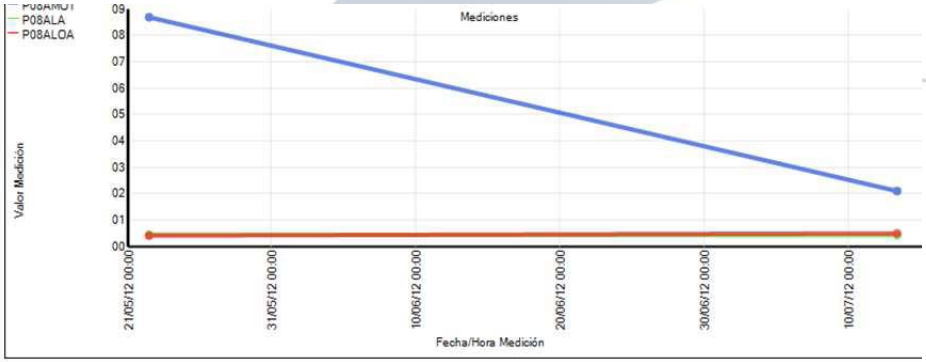

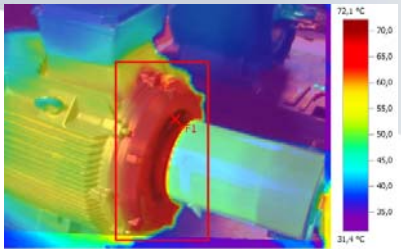

Agenda

1. The cooling circuit pumps at ALBA and its preventive maintenance status. Moving to predictive approach.

2. Vibration monitoring evolution. Compare data taken before and after the corrective. Problems still appearing after interventions.

3. **Launching an inside Engineering Division project.**
   - **Results: Modal Analysis (Natural Frequencies)**

4. Conclusions and next steps.

To look for a permanent solution

- We started to use predictive tools (vibration monitoring) looking for a condition based maintenance (CBM) but, once we detected that were used to diagnostic the problems, a project inside the Engineering Division started to look for a solution about the housing of chilled water pumping stations.

Launching an inside project

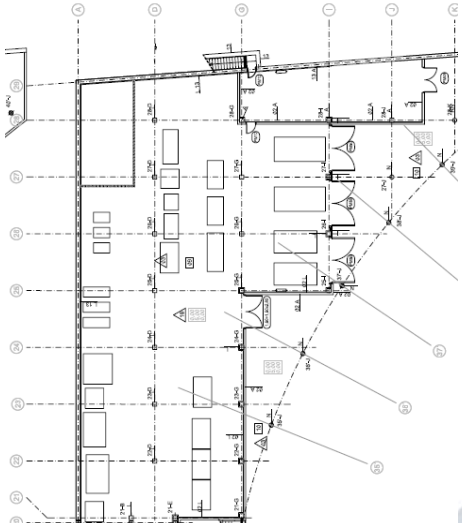

Complete analysis of the pumps + the concrete slab!!

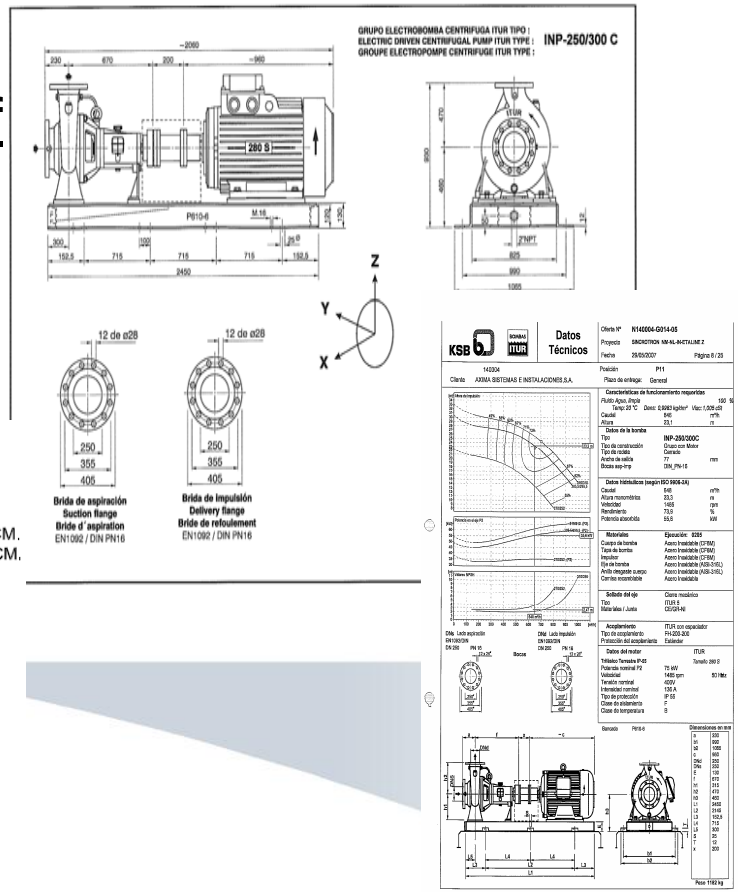

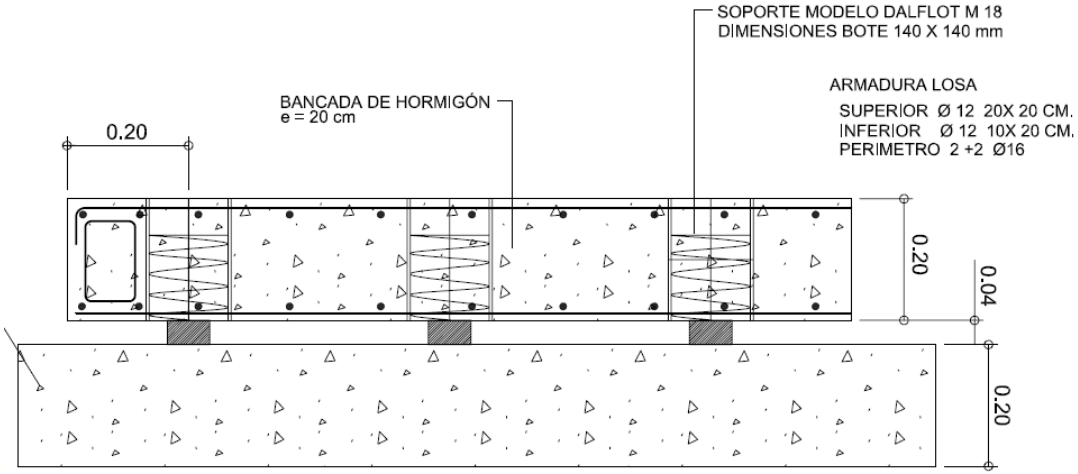

Geometry

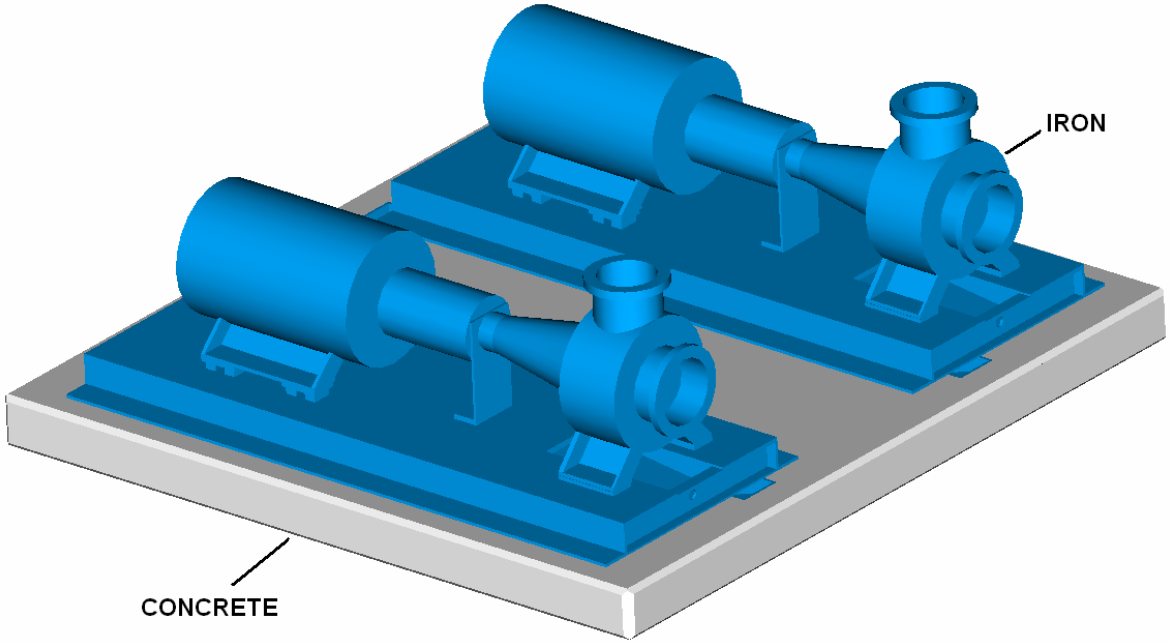

Concrete Physical Properties

- Density = 2580 Kg/m^3
- Young Modulus = 2,5x10^4 MPa
- Poisson Ratio = 0,25

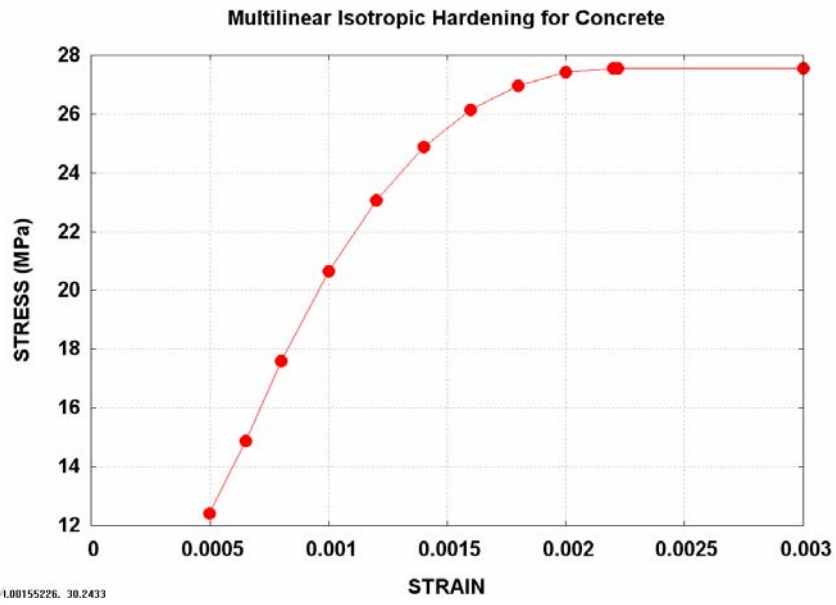

Iron Physical Properties

- Density = 7850 Kg/m^3
- Young Modulus = 2x10^5 MPa
- Poisson Ratio = 0,3

Geometry

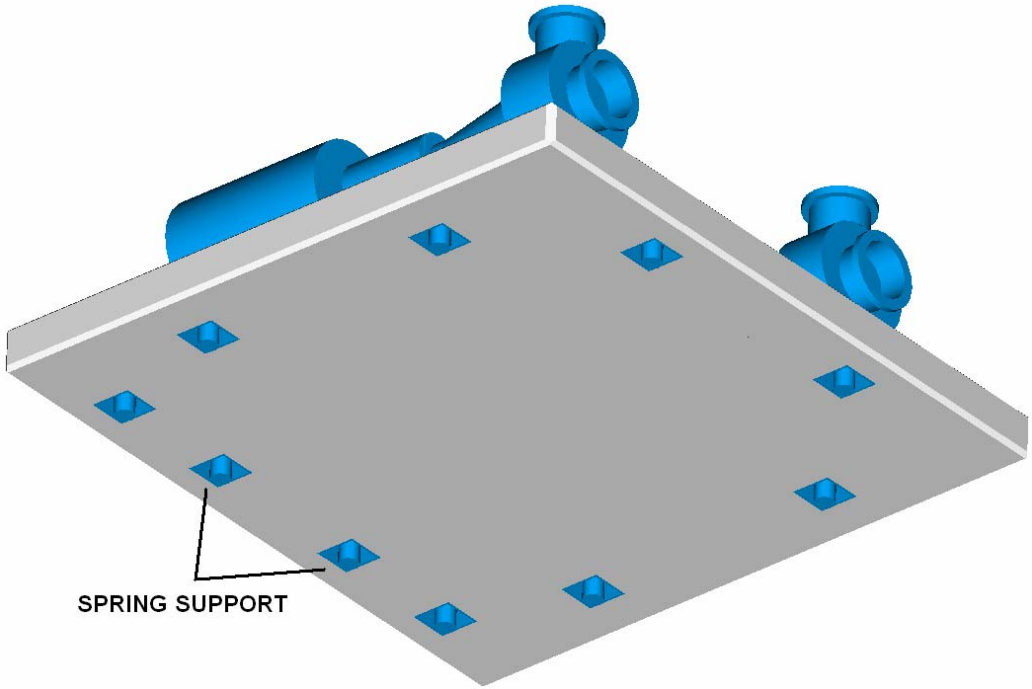
SPRING SUPPORT

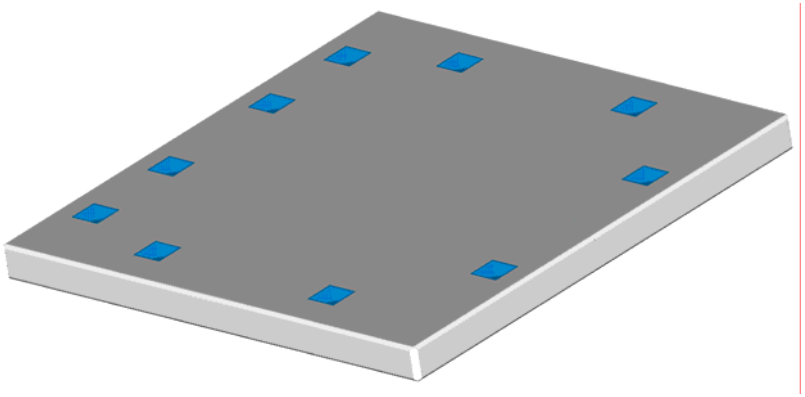

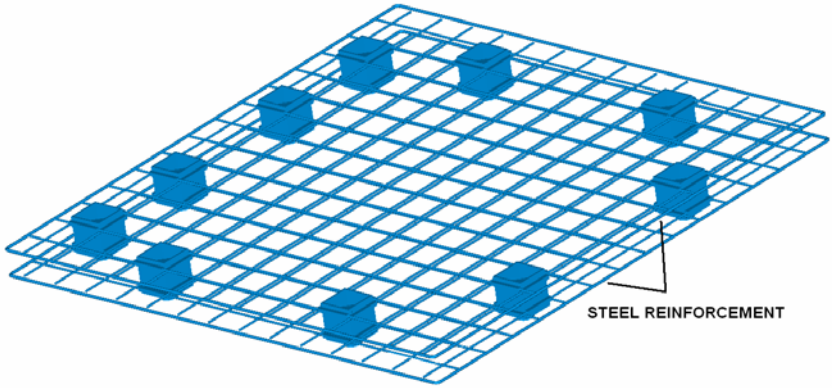
STEEL REINFORCEMENT

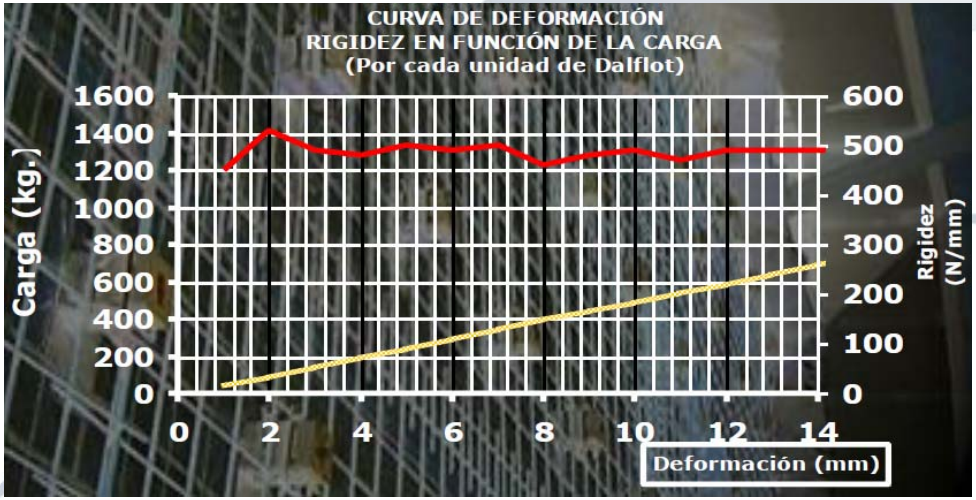
CURVA DE DEFORMACIÓN
RIGIDEZ EN FUNCIÓN DE LA CARGA
(Por cada unidad de Dalflot)
Carga (kg.)
1600
1400
1200
1000
800
600
400
200
0
Rigidez (N/mm)
600
500
400
300
200
100
0
0
2
4
6
8
10
12
14
Deformación (mm)

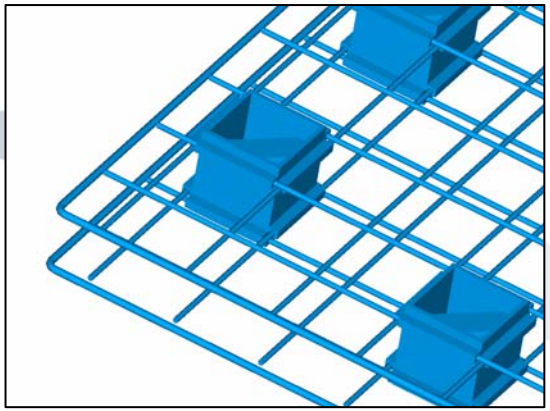

ANSYS Element Types

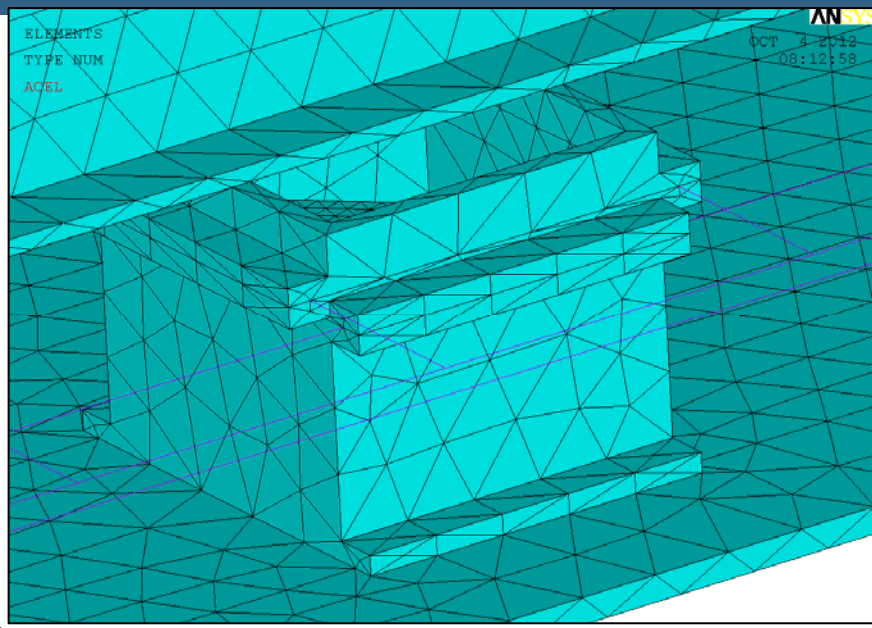

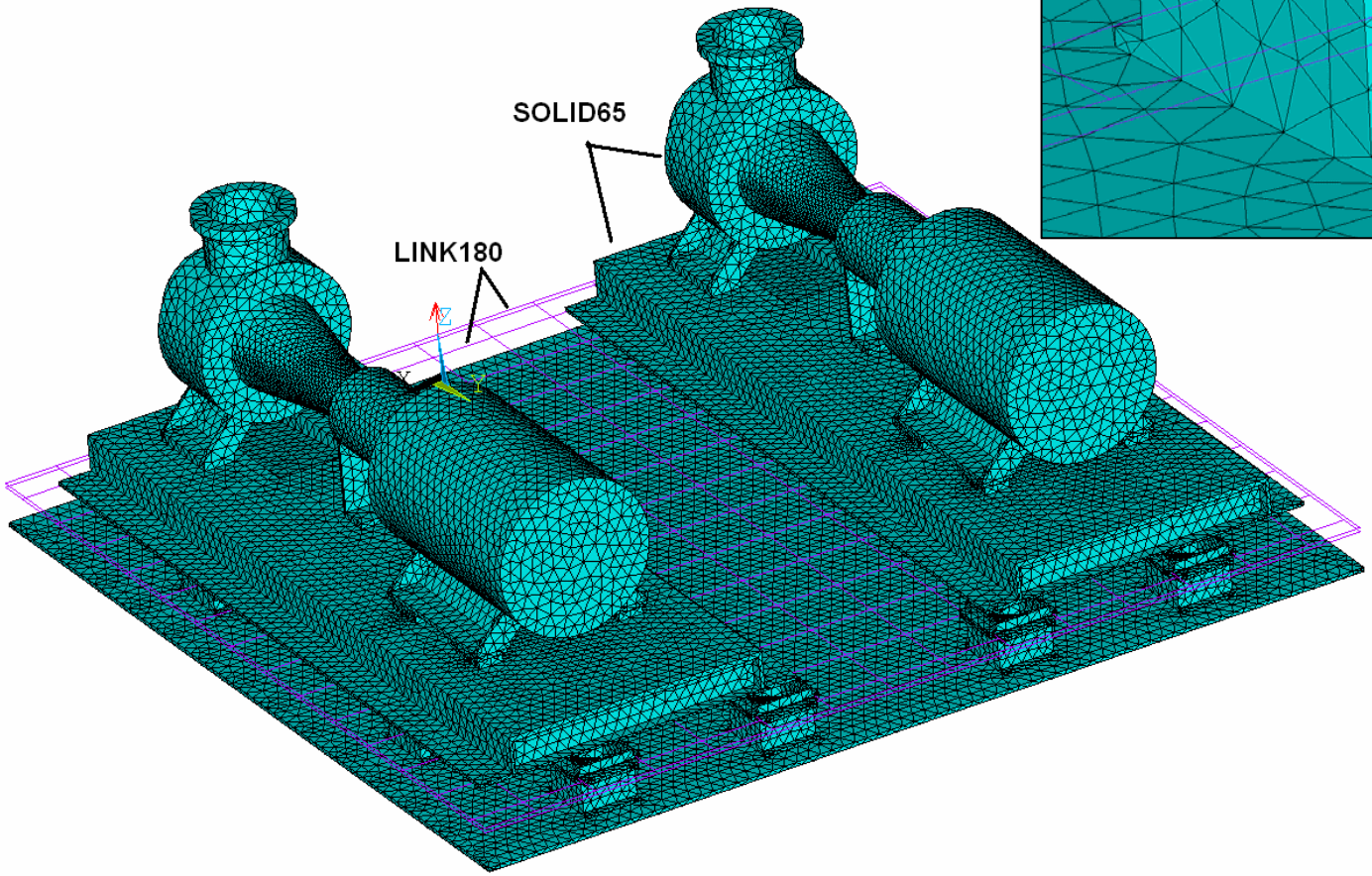

ANSYS Material Types

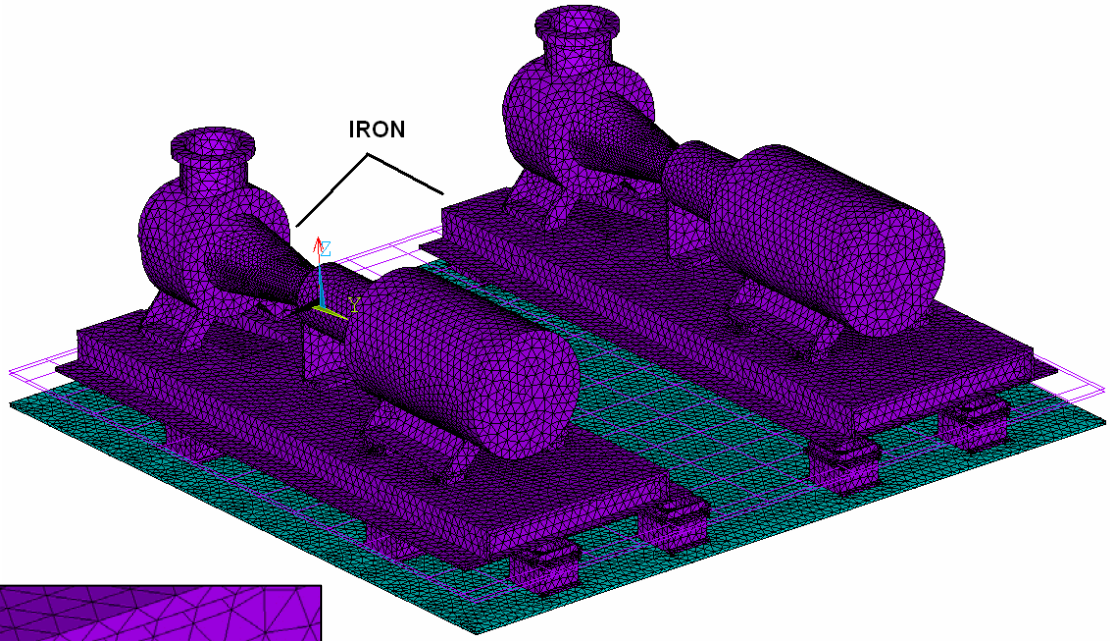

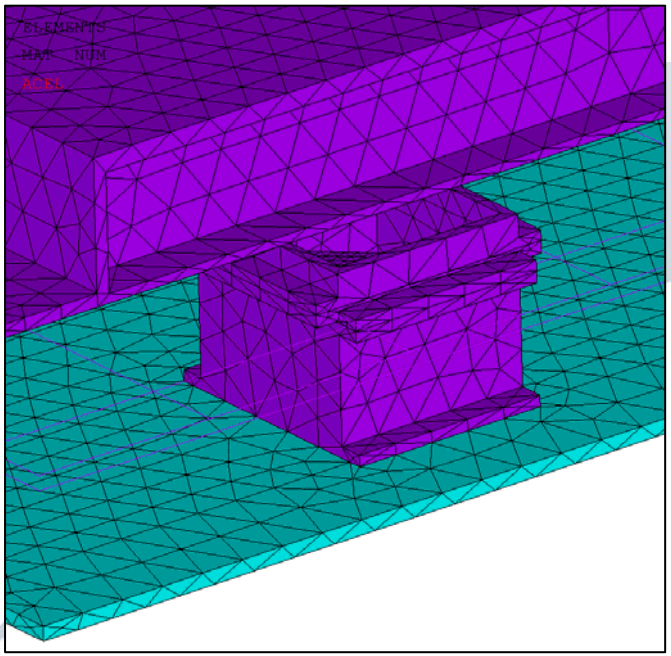

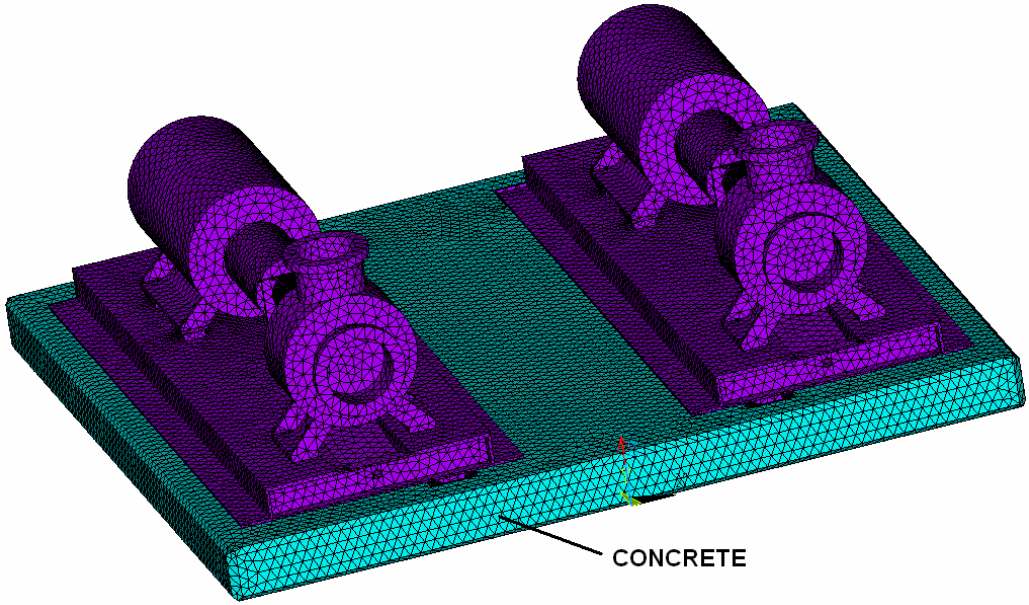

Results: Modal Analysis (Natural Frequencies)

1st Mode Shape
Frequency 55,1 Hz

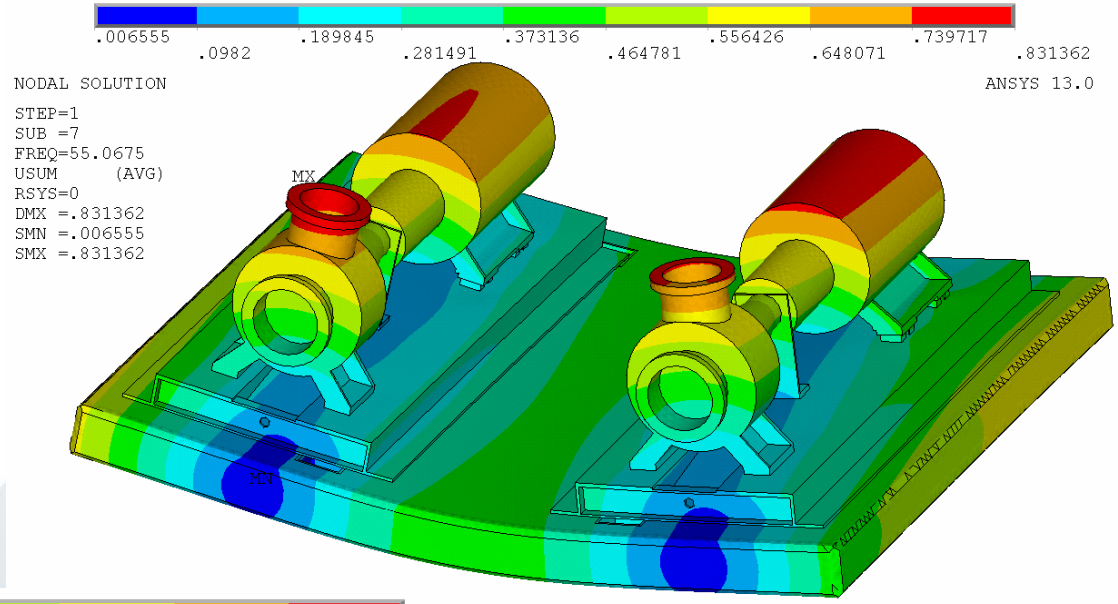

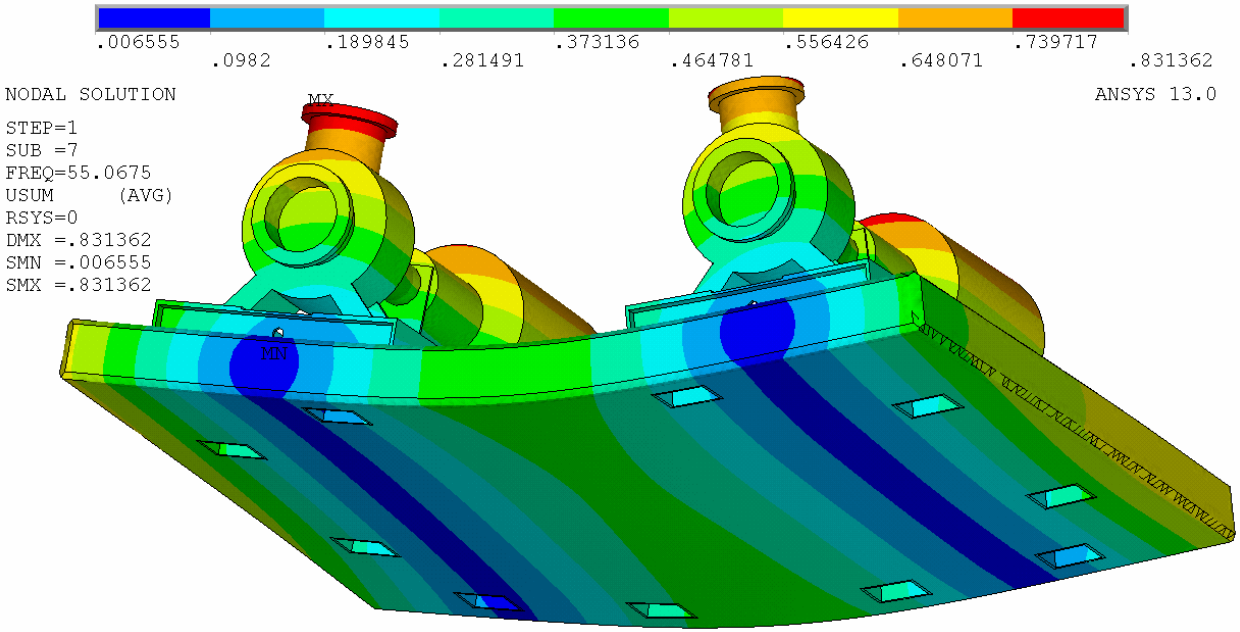

Results: Modal Analysis (Natural Frequencies)

2nd Mode Shape
Frequency 55,8 Hz

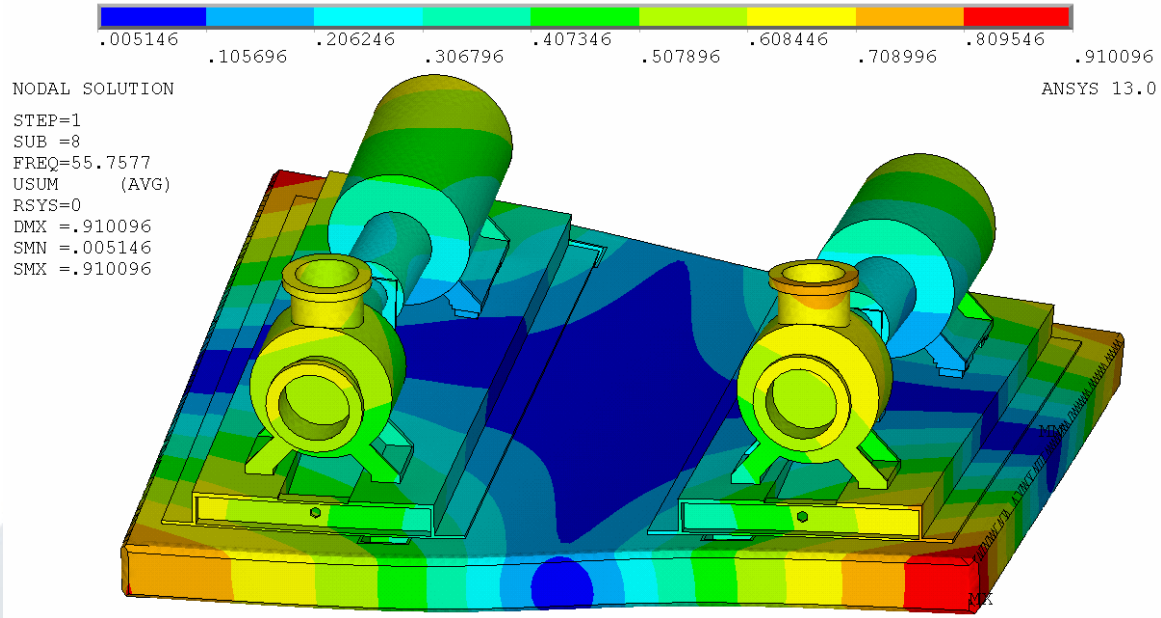

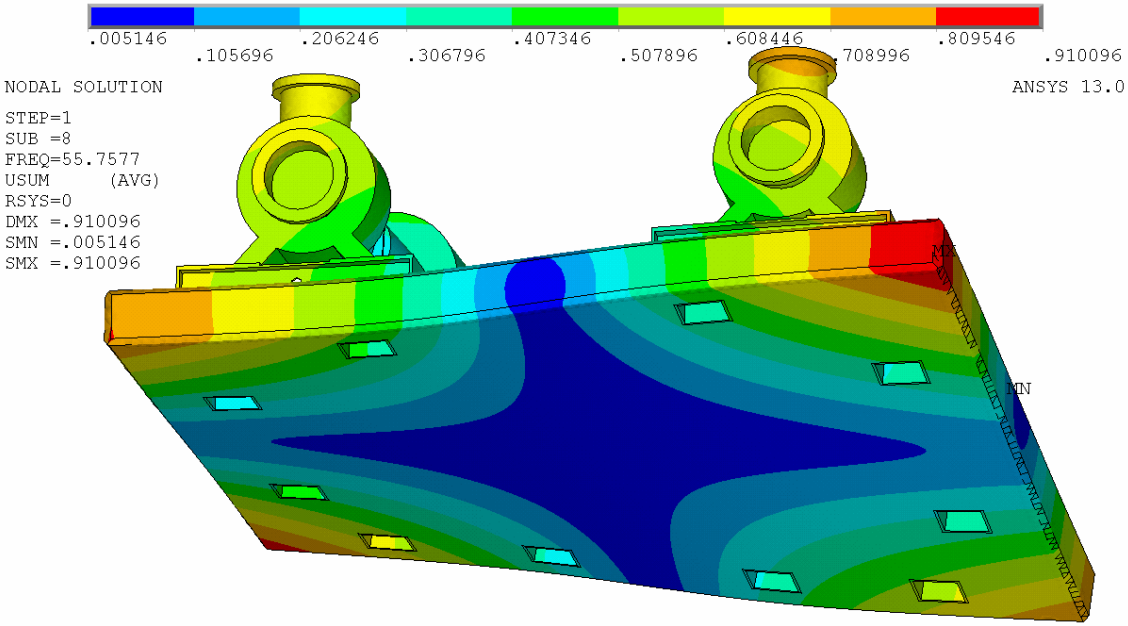

The model is valid

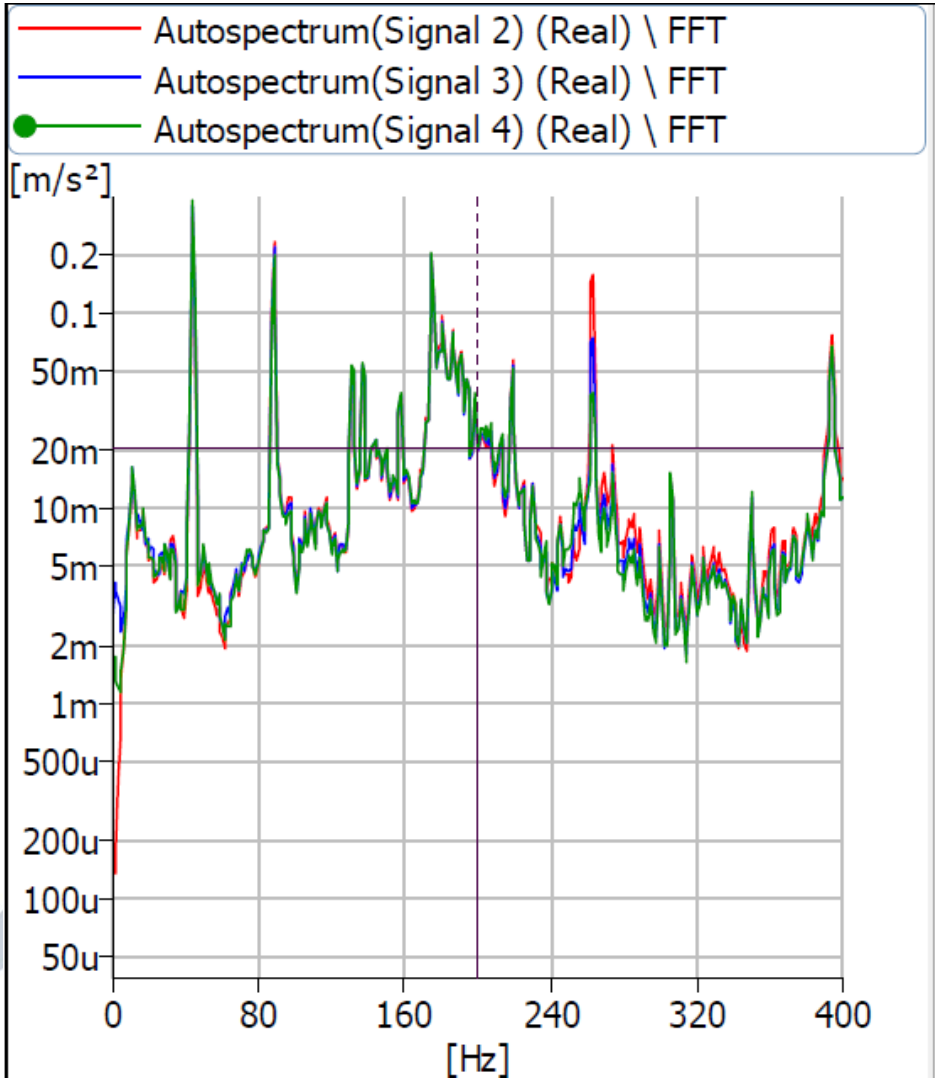

Cursor values
X: 200.000 Hz
Y: 19.462m m/s²
Y: 19.709m m/s²
Y: 20.532m m/s²
Vermell: accel 2,5 V/g
Blau: accel de 100 mV/g
Verd: accel de 500 mV/g

- The model is valid so, more simulations with different solutions will run to find the correct one to be applied.

New Geometry (Version HEB160)

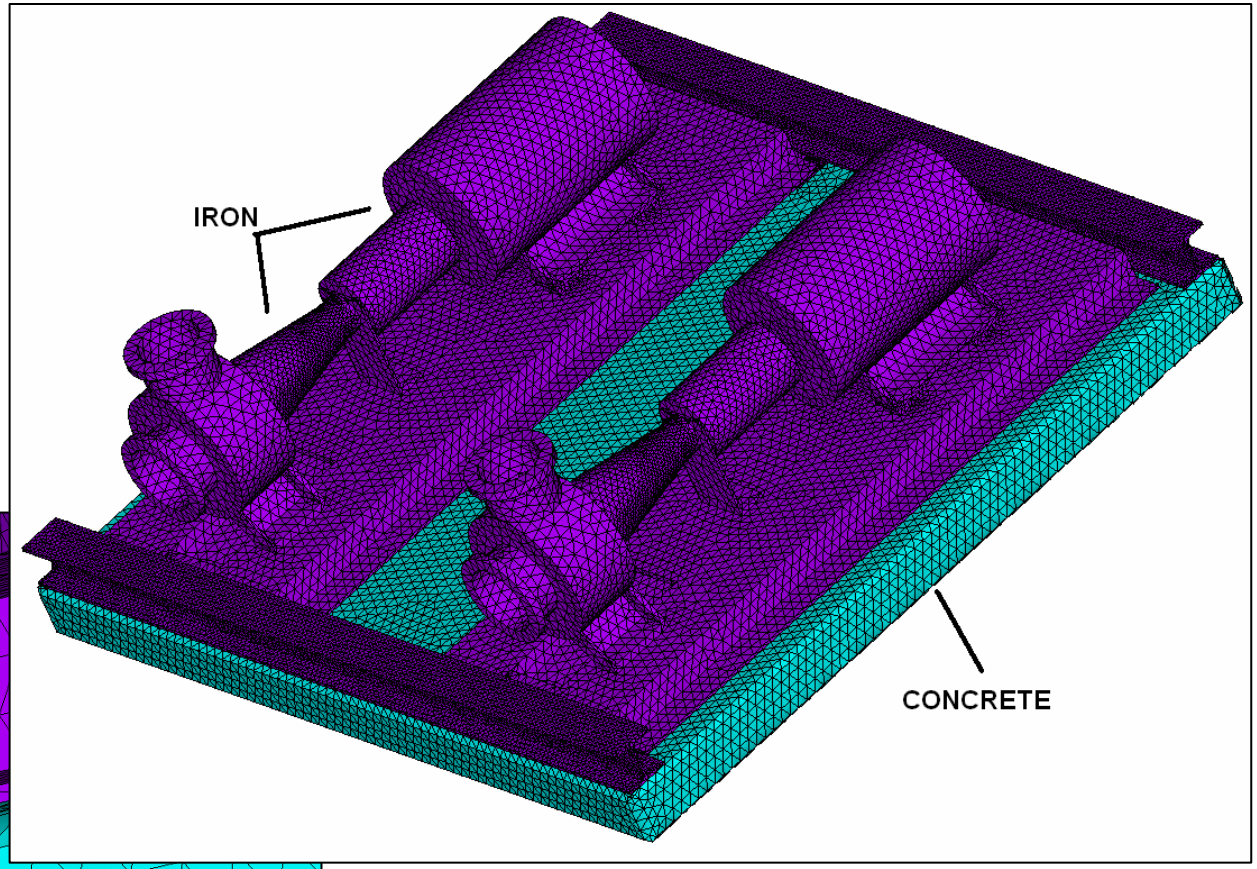

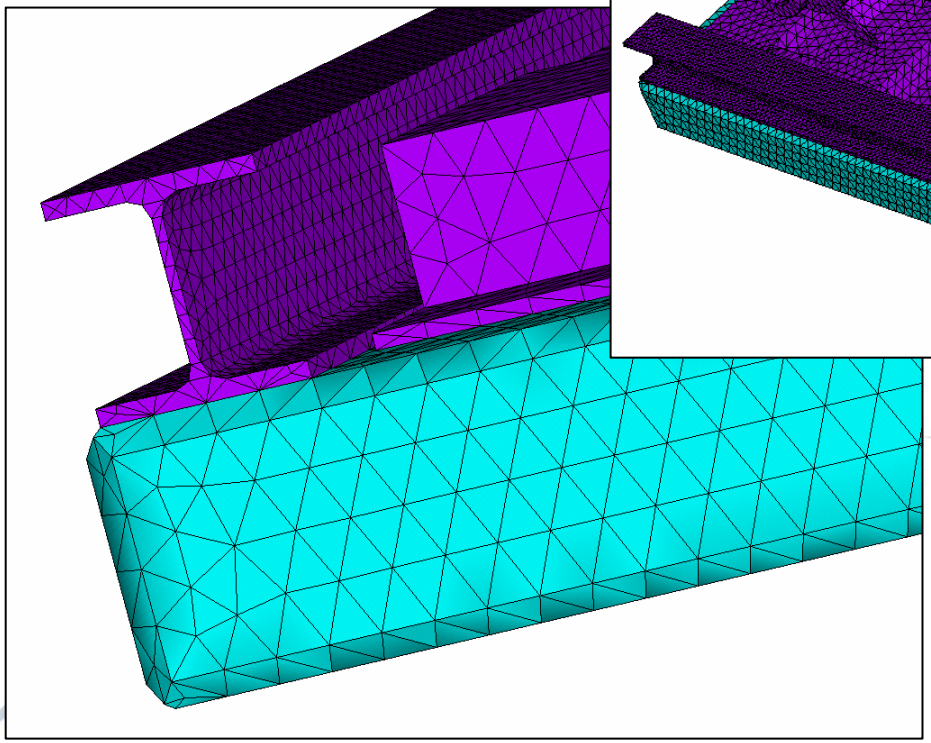

New Geometry (Version HEB160 perimeter)

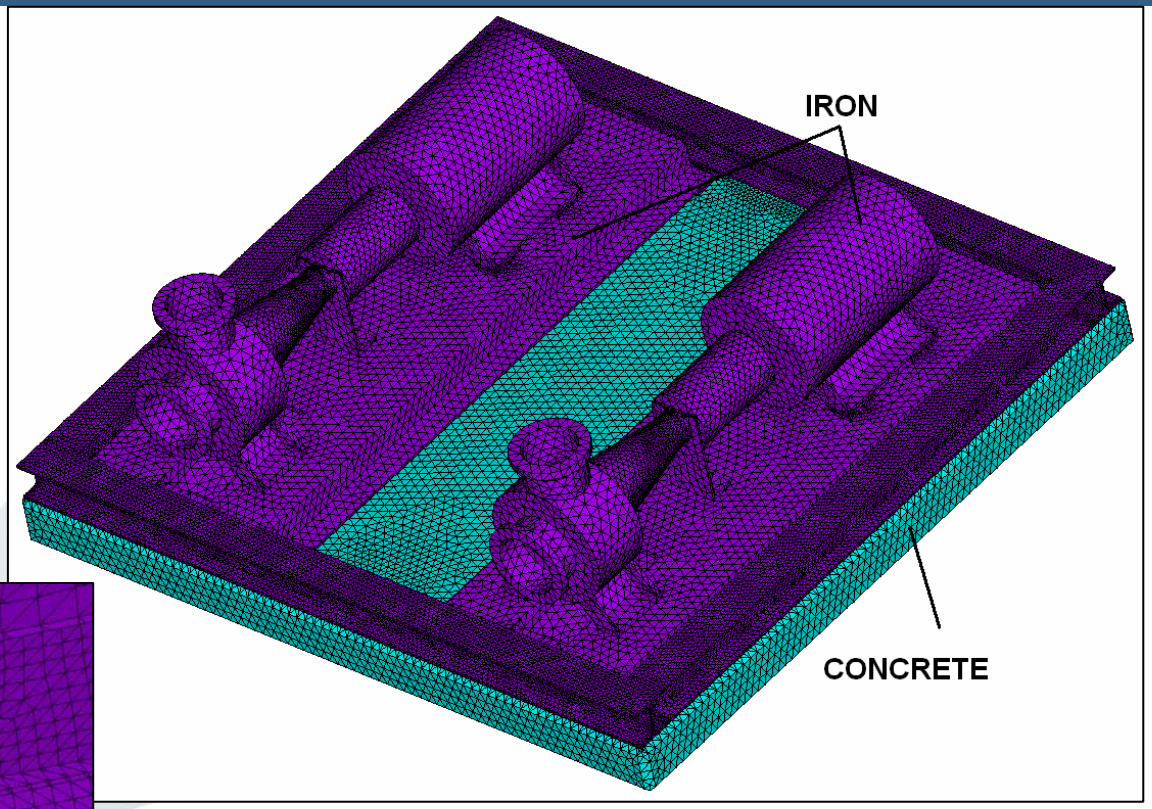

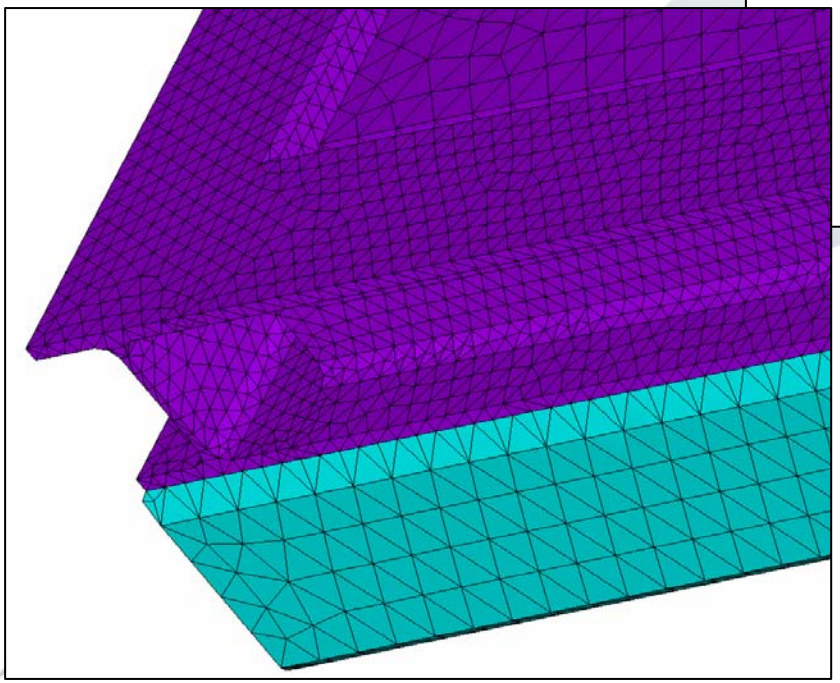

Results: Modal Analysis (Natural Frequencies)

Shape Frequency	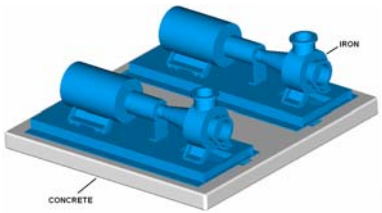	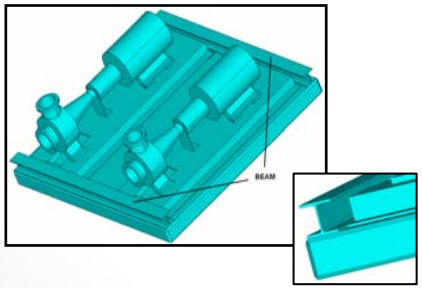	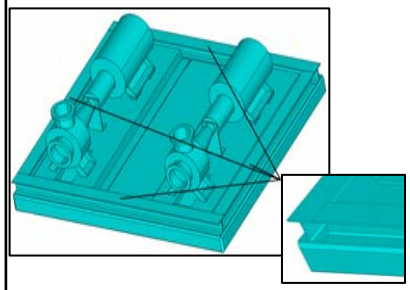
1st Mode	55,1 Hz 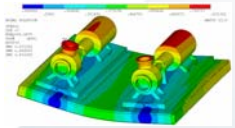	56 Hz 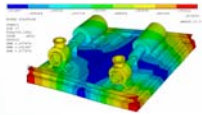	55 Hz 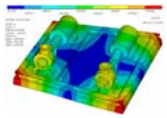
2nd Mode	55,8 Hz 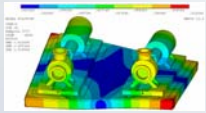	68 Hz 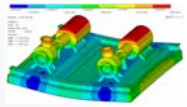	67 Hz 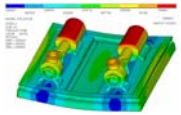
3rd Mode	125 Hz	130 Hz	130 Hz
4th Mode	128 Hz	135 Hz	137 Hz
5th Mode	143 Hz	135 Hz	140 Hz
6th Mode	162 H	158 Hz	160 Hz

Agenda

1. The cooling circuit pumps at ALBA and its preventive maintenance status. Moving to predictive approach.

2. Vibration monitoring evolution. Compare data taken before and after the corrective. Problems still appearing after interventions.

3. Launching an inside Engineering Division project.
   - Results: Modal Analysis (Natural Frequencies)

4. **Conclusions and next steps.**

Next steps

- **Run more simulations in order to choose a solution.**
- **Once the P11 circuit will be solved (physically implemented), move to the other circuits with same problem but different configuration (2+1 instead of 1+1).**
- **Then it will be the time to come back at the beginning: use vibration tools, in a permanent monitoring, for CBM.**
  - **Measure equipment status and performance (predictive).**
- **In a later stage, the current scada software platform that is the Centralized Management System of the conventional infrastructure facilities, will manage:**
  - **Monitor alarms of equipment health, and failure diagnosis support.**
  - **Perform health/life data analysis and maintenance decision support.**

Conclusions

- This exercise it has been a very good example of how interact and work all together the multidisciplinary profiles of our engineers at CELLS Engineering Division.

- Technician and Engineers from several fields such us Infrastructure, Workshop, Maintenance technicians, Civil Works, Survey&Alignment, Project Office, Draftsmen, Designers and Calculists.

Thanks to:

Especial thanks to my colleagues: Lluis Miralles, Carles Colldelram, Juanjo Manotas, Jordi Iglesias, Marcos Quispe, Llibert Ribó, Cristina Orozco, Fabien Rey, Jose Ferrer, Pau Jimenez and Karim Maimouni.

All of them have worked and are still working to solve a structural problem at the chilled water supply, in order to achieve the desired reliability of the cooling services at the ALBA accelerators complex, and facilitate the maintenance.