Development of the GRazing-incidence Insertion Device X-Ray Beam Position Monitor (GRID-XBPM) for the APS Upgrade

October 18, 2012

Advanced Photon Source

Soonhong Lee, Bingxin Yang, Jeff Collins, Try Leng Kruy, Glenn Decker, Pat Den Hartog, and Mohan Ramanathan

MEDSI 2012 @ Shanghai

The Advanced Photon Source is an Office of Science User Facility operated for the U.S. Department of Energy Office of Science by Argonne National Laboratory

Outline

- Introduction
  - Research & Development of GRID-XBPM
- High-Power Beam Test of GRID-XBPM @ S29-ID FOE (Jan. 16 ~ April 3, 2012)
- Construction design of GRID-XBPM for APS U HHL FEs
- Summary

What XBPMs have we been using?

Popular photoemission-based XBPMs

- Workhorse since 1980's for light sources world-wide.
- Four blades, sensitive to soft X-ray & strong gap dependence.
- Software compensation (Glenn Decker, 2004) to reduce the gap dependence from hundreds of μm to tens of μm residual
  → Do not meet APS-U requirements, especially for larger gaps (revolver undulators).

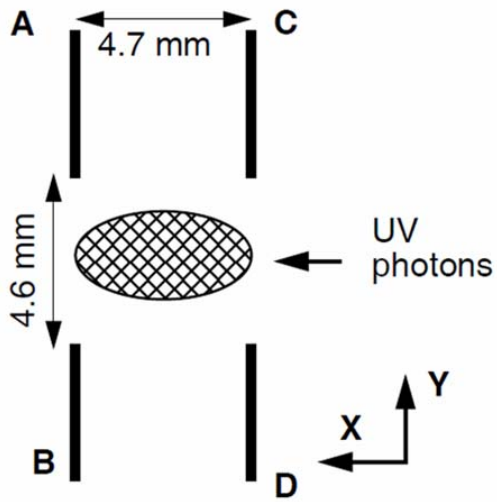

Figure 0:
P1 IDxbpm blade geometry

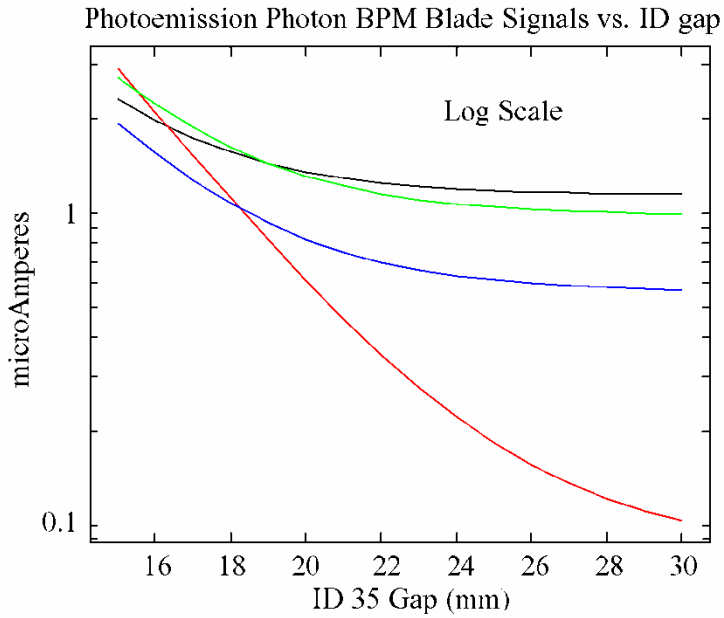

We need a new XBPM!

Development of a new XBPM sensitive to only Hard X-rays

- Started in 2005, based on hard X-ray fluorescence (XRF)
  - Reduce the strong contamination by soft x-ray radiation by nearby magnets
- Considered photoconduction type XBPM using Au or Cu-coated CVD diamond (normal incidence) → Quality degradation of diamond and high-power beam

Plan View of Hard X-ray Beam Position Monitor Concept

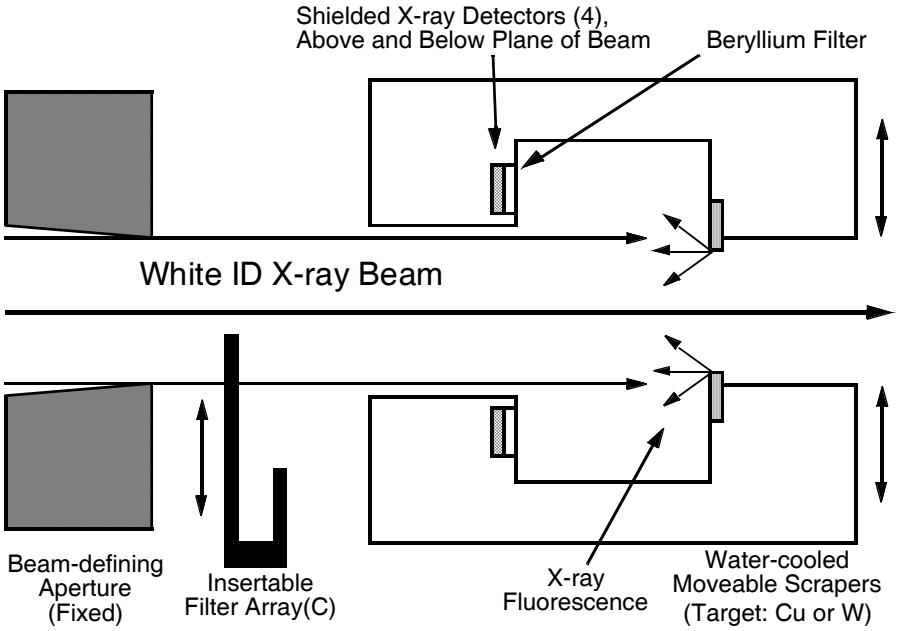

* G. Rosenbaum & G. Decker

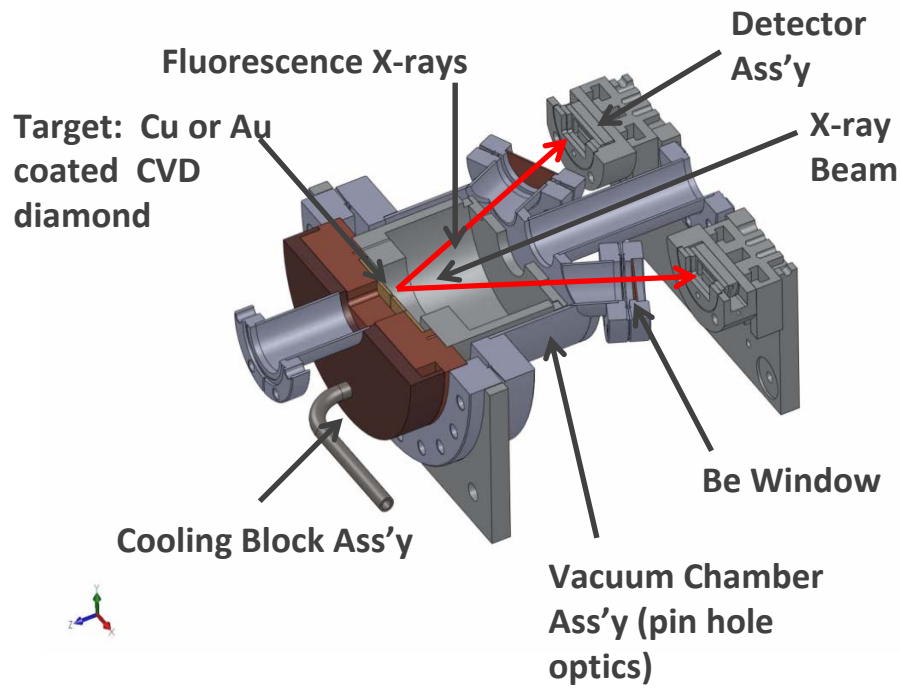

GRID-XBPM Concept for APS-U HHL FE

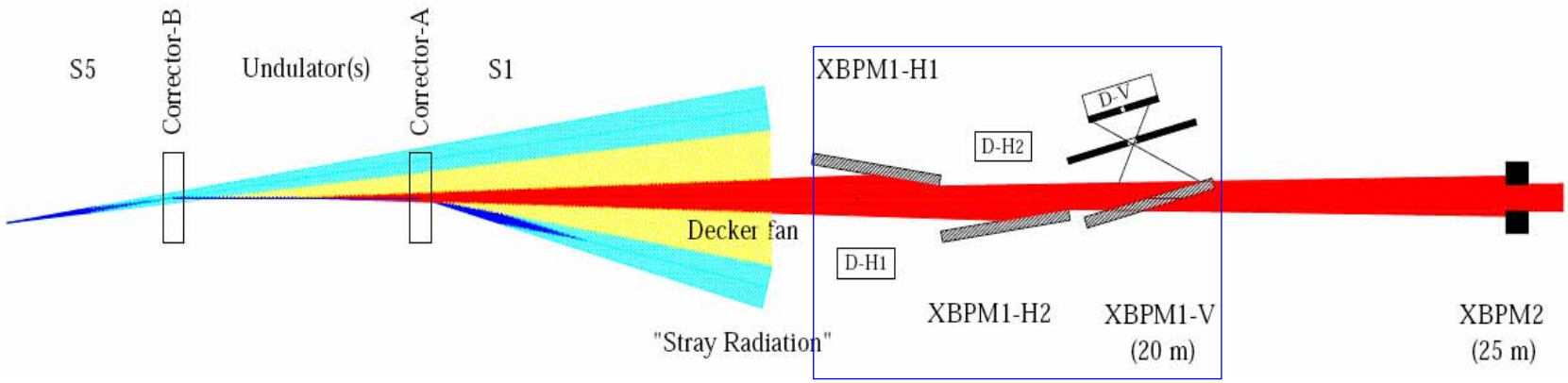

- The best way to accurately and precisely measure the beam centroid is to terminate the beam on Cu or its alloy

  Then, use the emitted X-ray fluorescence (XRF) as a diagnostic.
- Key ideas:
  - Use two or three vertical target plates (XBPM1-H1, -H2, -V)
  - Displace these targets along the beam direction with a grazing-incidence angle to increase the beam footprint .
  - Imaging the x-ray fluorescence (XRF) footprint using aperture optics
  - Readout the XRF image with multi-element detectors

GRID-XBPM Concept (MAC Review, Oct. 2010)

- Key ideas (Cont'd):
  - Infer the position of the x-ray beam core thru the intensity measured
  - Compensate for the gap dependence with FPGA, etc.
  - The entire assembly is mounted on one precision table.

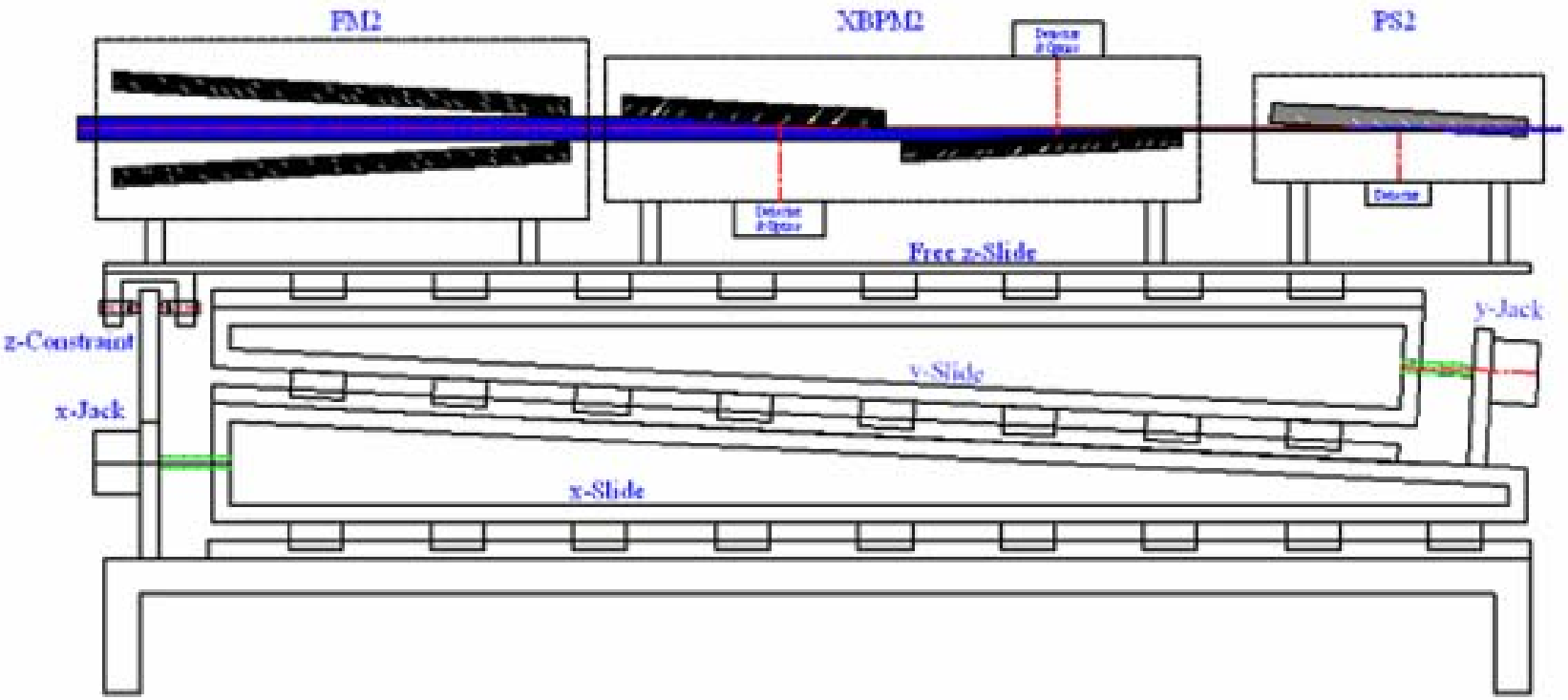

GRID-XBPM Proposal (Proposed in 2011)

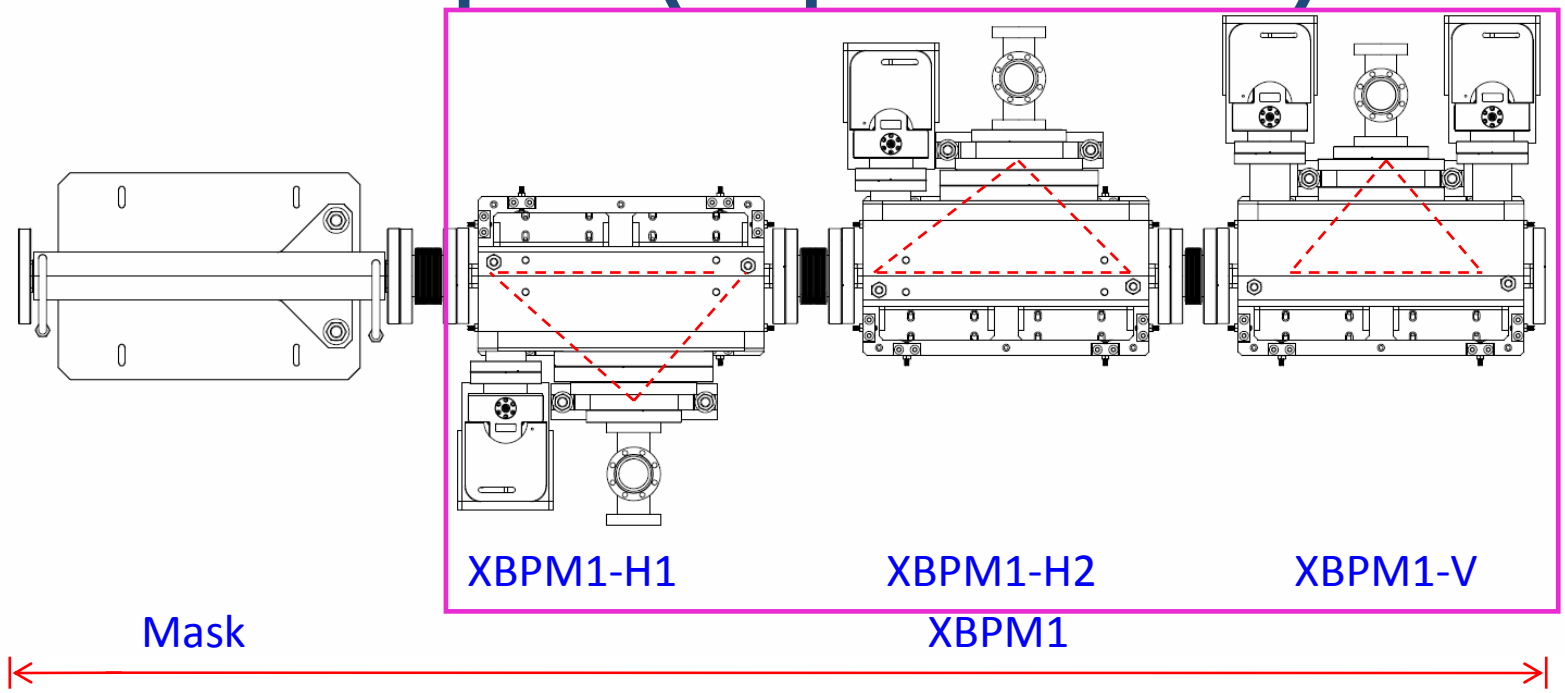

96” L

(~450 kg)

Components		Aperture	
		X (mm)	Y(mm)
Mask	In Out	27.4 10	50 50
XBPM-H1 & H2	In Out	16.6 4	50 50
XBPM1-V	In Out	6.9 5.6	50 1.5

GRID-XBPM Proposal (Proposed in 2011)

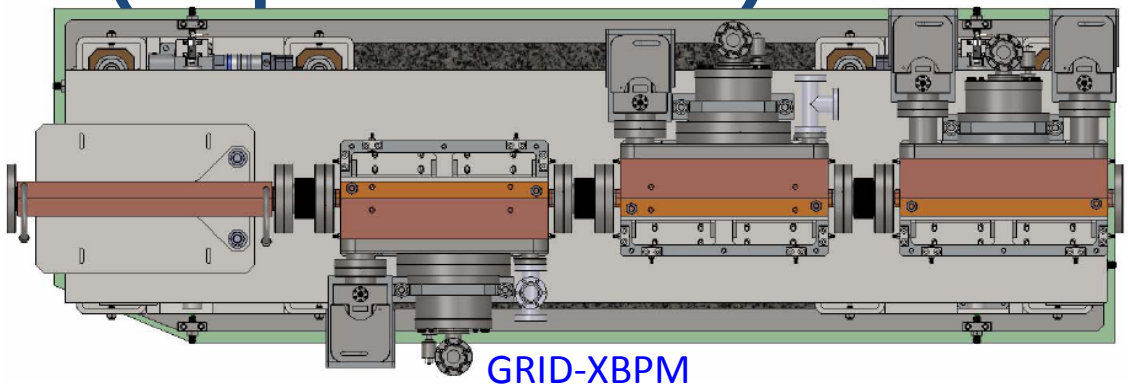

GRID-XBPM

Support Girder, Cam-shaft mover, & Fixed base support

Granite Base

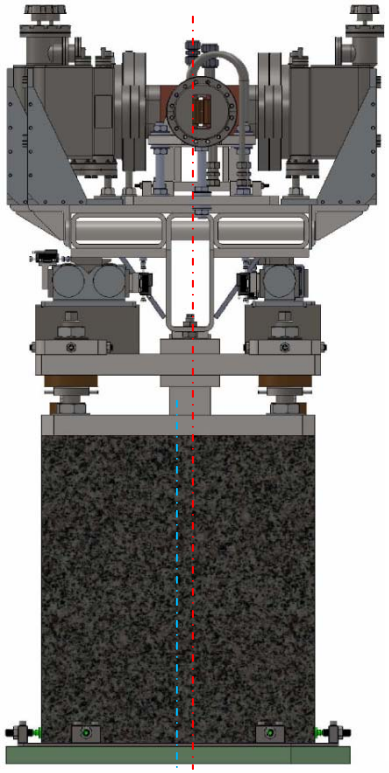

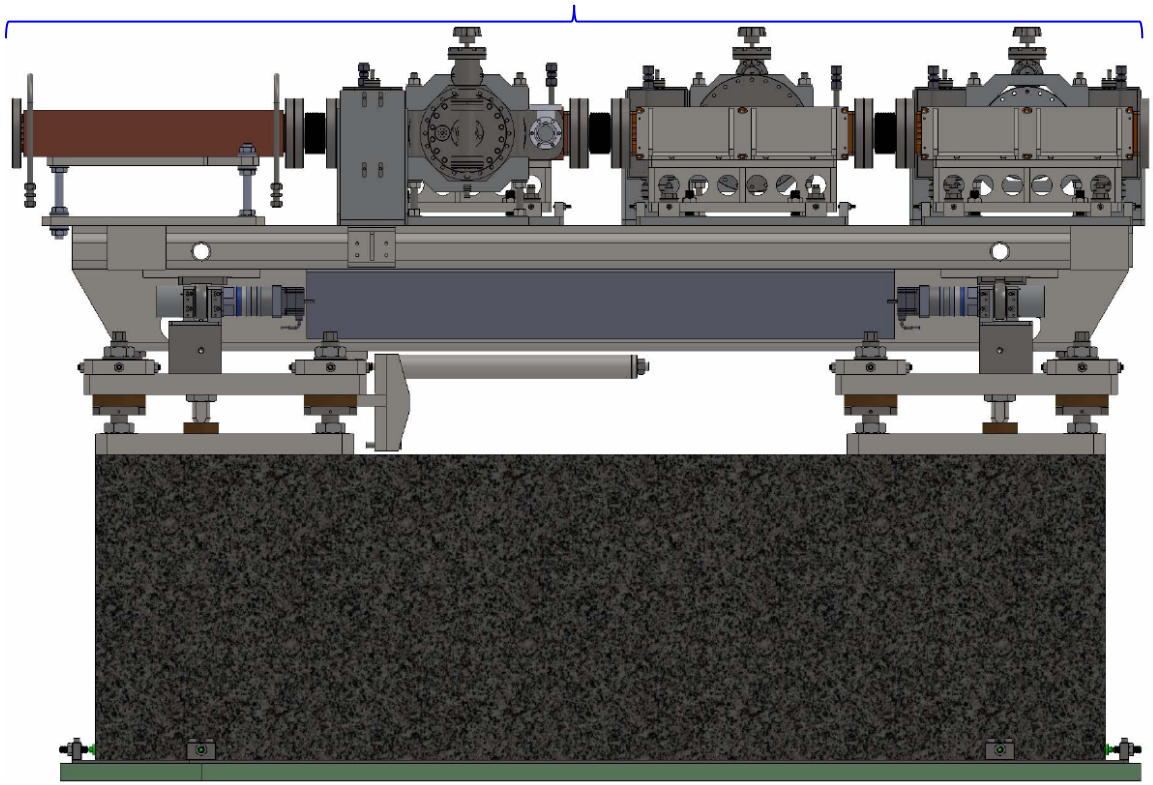

XBPM1-V: Exploded view

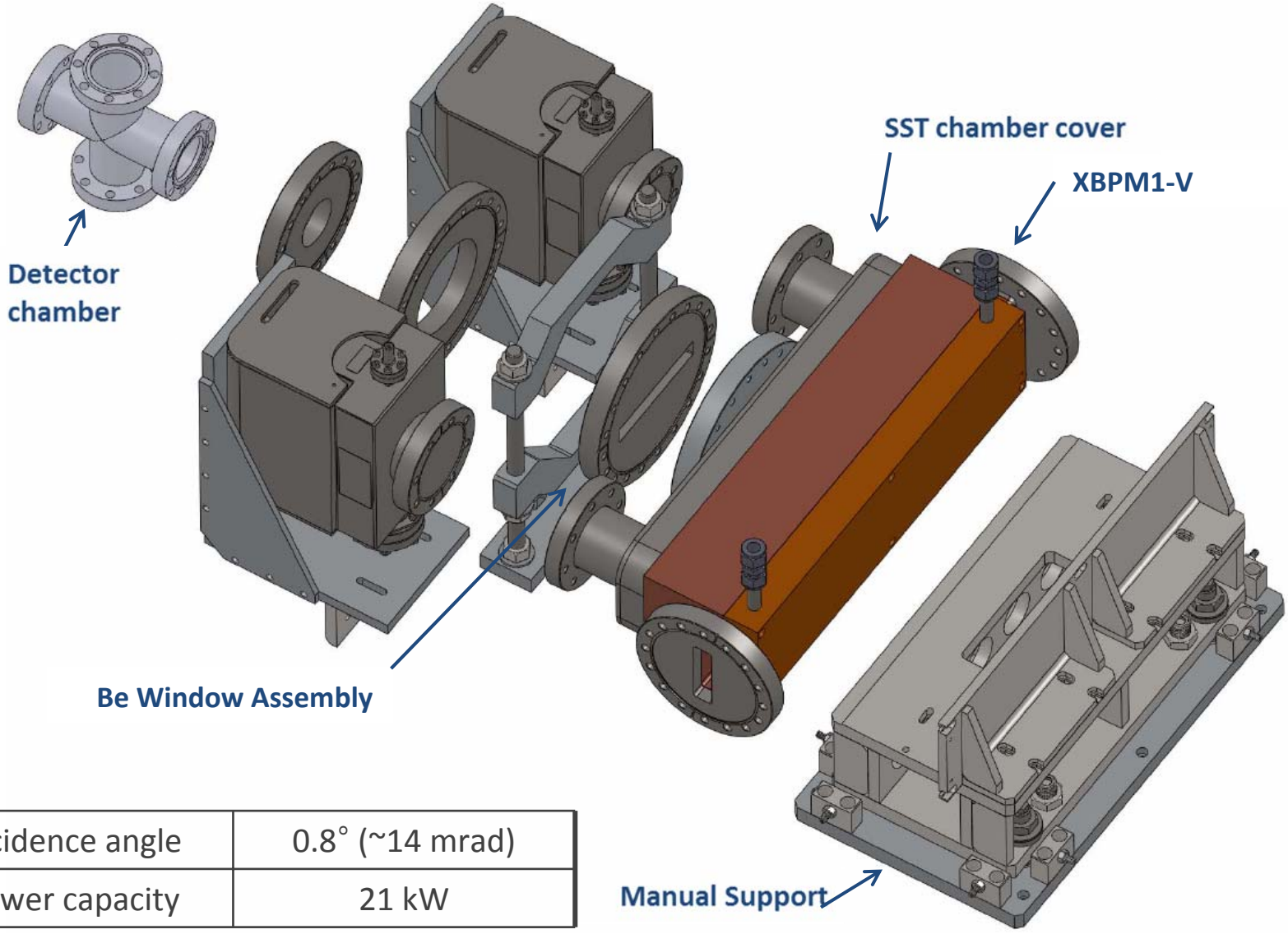

Incidence angle	0.8° (~14 mrad)
Power capacity	21 kW

GRID-XBPM prototype for Tests

1. **Existing optical table with a new optical breadboard (6'x 3' x 4.4")**
2. **No Mask2**

NOTES
1. ESTIMATION OF XBPM1 WEIGHT: ~400kg
2. ESTIMATION OF BREADBOARD WEIGHT: ~370lb
3. LOAD CAPACITY OF EACH T1-920200: 500lb
4. LOAD CAPACITY OF TABLE: 1,130lb (513.6kg)
5. MOTION SPECIFICATIONS
   1. HORIZONTAL MOTION (X) : ±75, Z=0
   2. VERTICAL MOTION(Y): ±25 & ±87
   3. MOTION REPEATABILITY: 10 um
   4. MOTION RESOLUTION: 0.64 um VERTICAL
   5. MOTION RESOLUTION: 3.18 um HORIZONTAL (@400 STEPS/REV)
   6. OPERATING MODE: STEPPER MOTOR

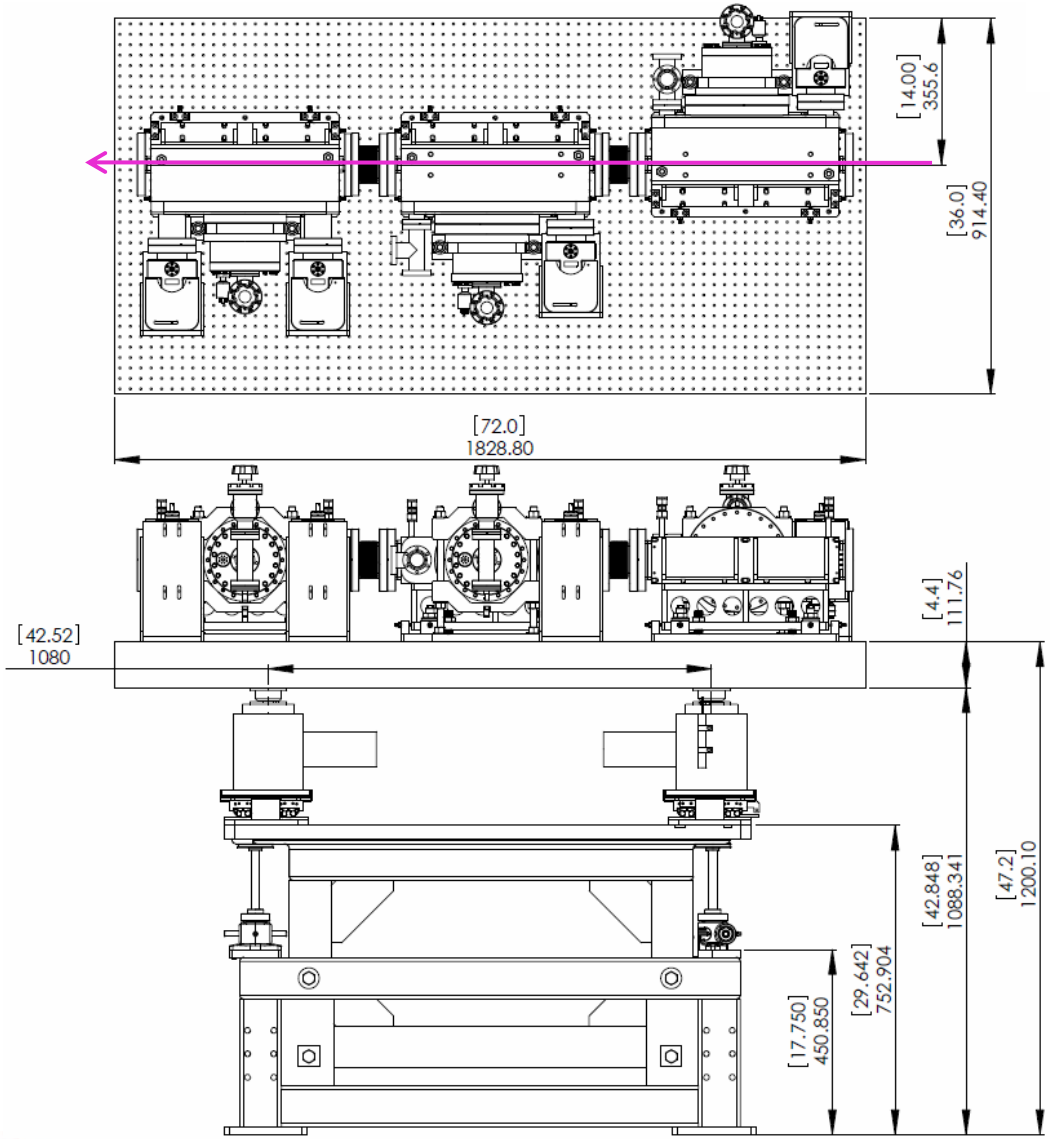

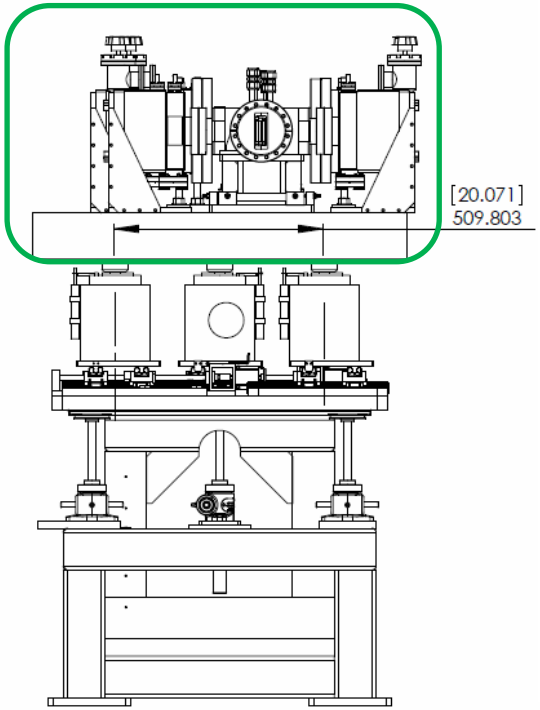

XBPM tests at S29-ID-A (First Optics Enclosure)

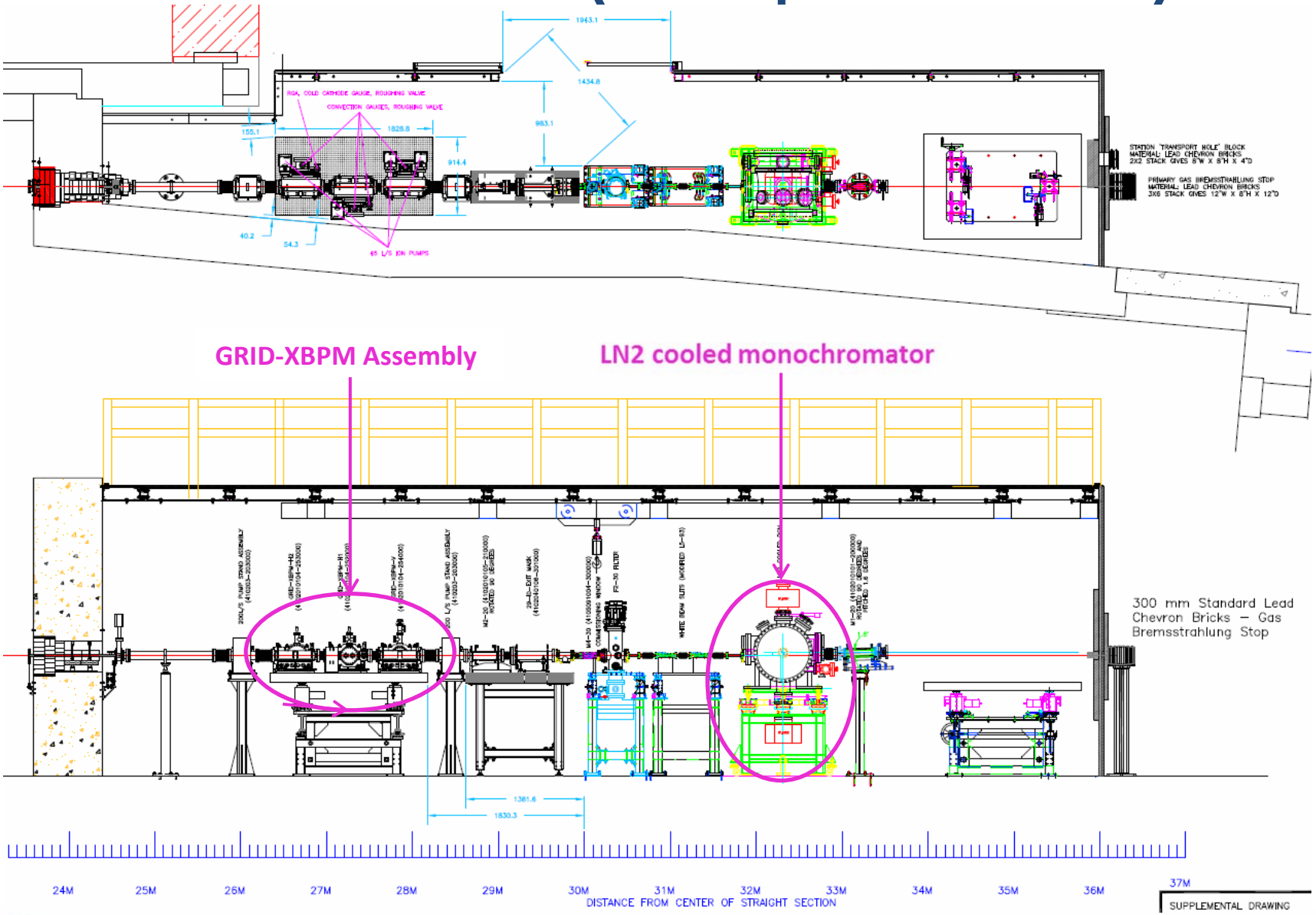

XBPM tests at S29-ID-A (First Optics Enclosure)

Two configurations tested:

- XBPM-H: Two flat plates, one at left and one at right, adjustable gap
- XBPM-V: Two flat plates, one on top and on at bottom, 1.5 mm fixed gap

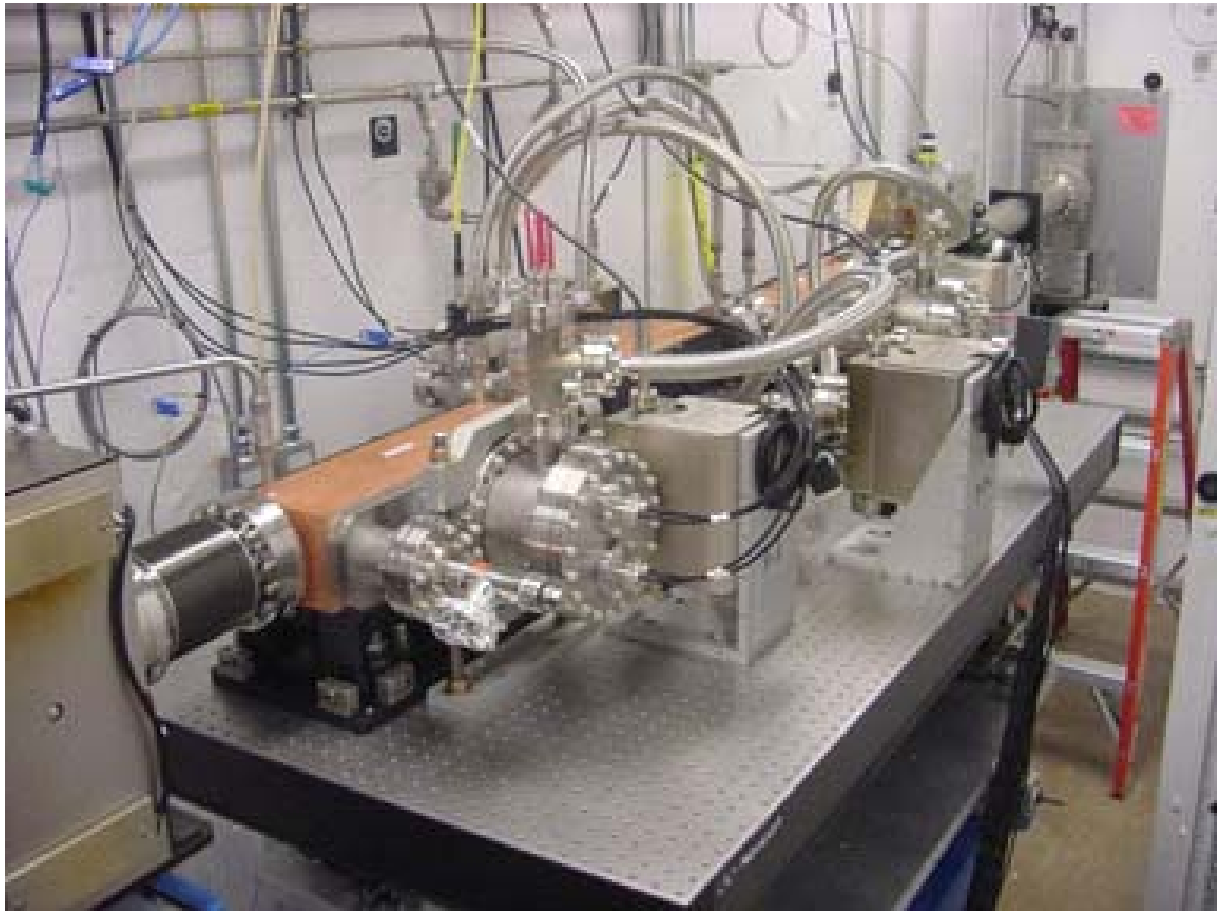

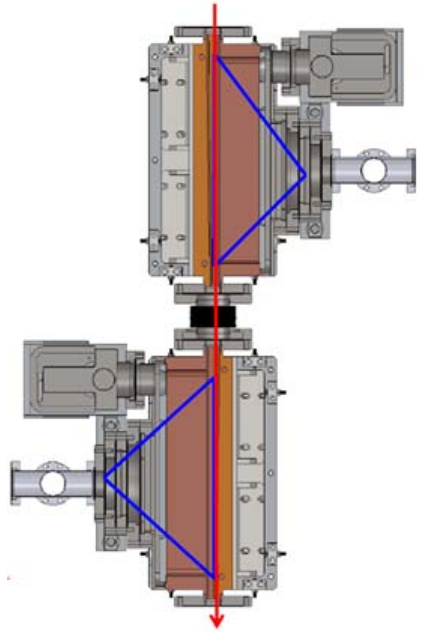

Thermal Studies (two in-line UAs at 100 mA)

- Applied total undulator beam power up to 10.6 kW during the tests.
  - Survived, but need long-term thermal studies & increase the power (in FE)
- Short-term thermal study showed a sequence of events after shutter is opened:

1) GlidCop absorber heats up quickly, in 3 ~ 5 minute (water temperature rise)
2) Chamber walls heats up by 15°C, ~ 10 minutes (infra-red imaging)
3) XBPM support heats up and moves up in > 15 minutes, causing XBPM readout to decrease steadily by more than 10 μm.

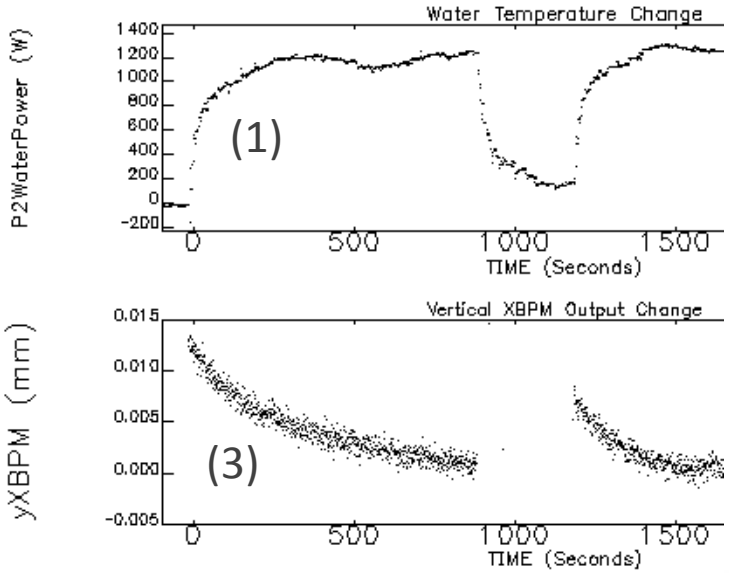

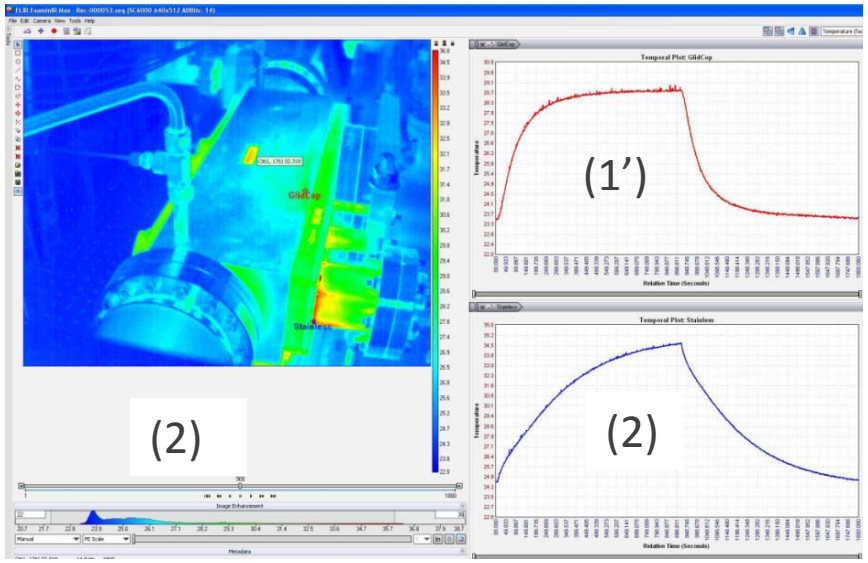

Background Radiation Studies

- Scan the electron beam horizontally in a wide angle range, with undulator gaps open (G_{max}=180 mm) for background, and closed (G = 29 mm, *K* ~ 0.4).

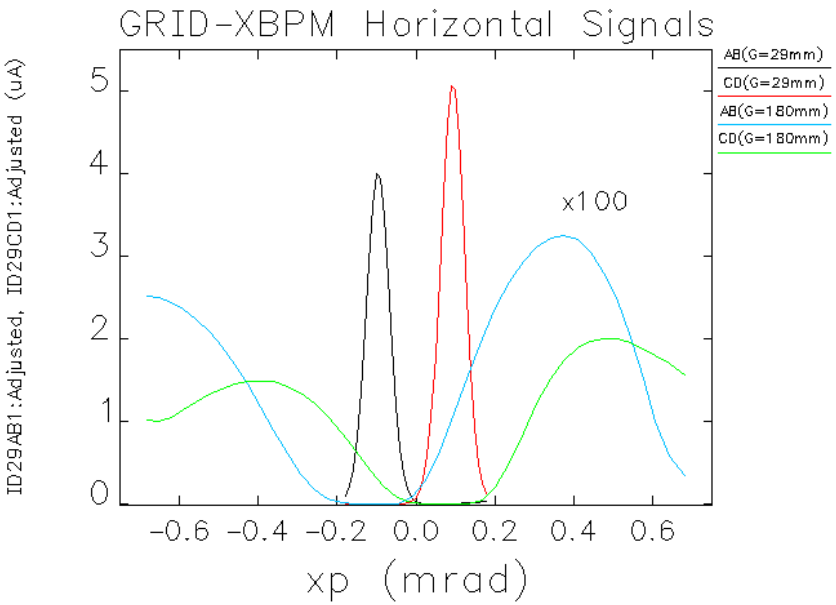

XRF (Cu-K)

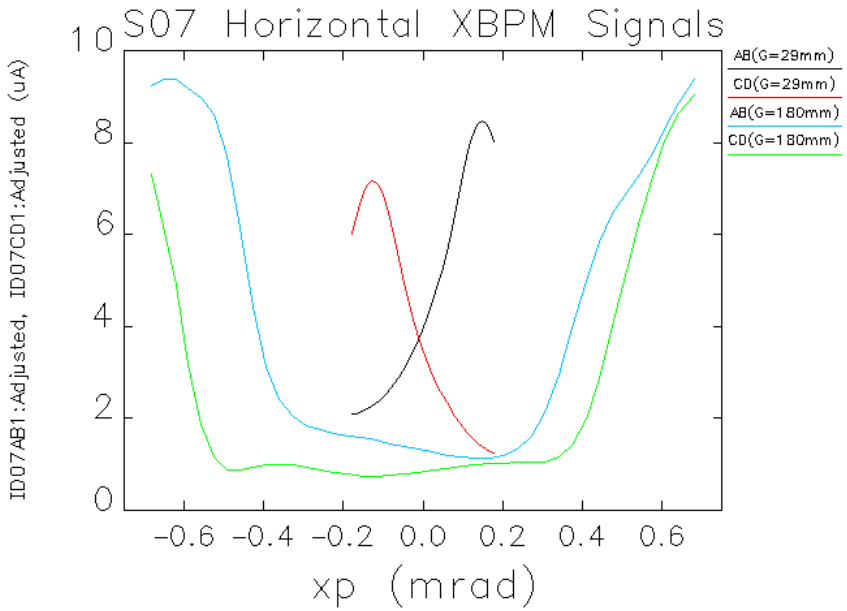

TEY (Au)

Courtesy of Bingxin Yang et al. (BIW 2012)

- XRF signals from GRID-XBPM are cleaner
- The photoemission is worse due to stray radiation

Gap Dependence Studies

- Use pinhole optics and two PIN diodes for the center-of-mass measurements of the vertical position (B. X. Yang, et al. BIW-2010)

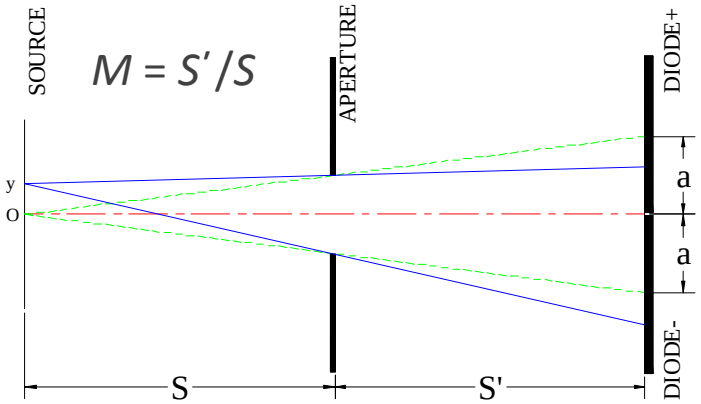

$$R(\bar{y}) = -\left(\frac{\Delta}{\Sigma}\right)_y = -\frac{I_+ - I_-}{I_+ + I_-} = \frac{M}{a}\frac{\int \rho(y)\, y dy}{\int \rho(y)\, dy} = \frac{M}{a}\bar{y}$$

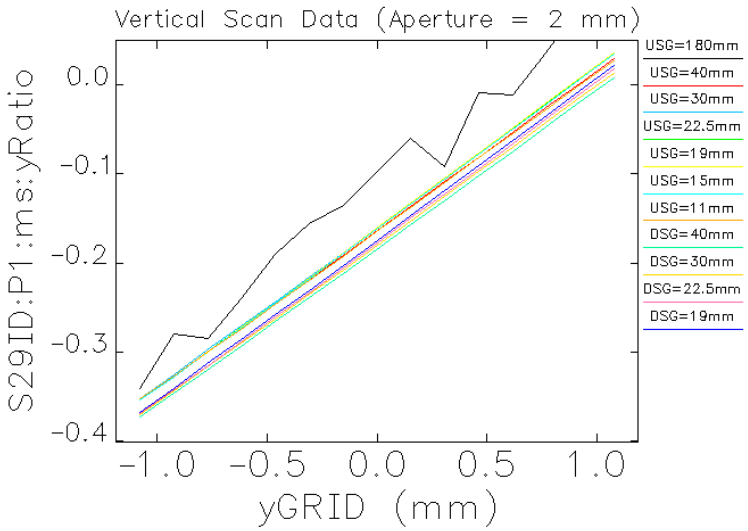

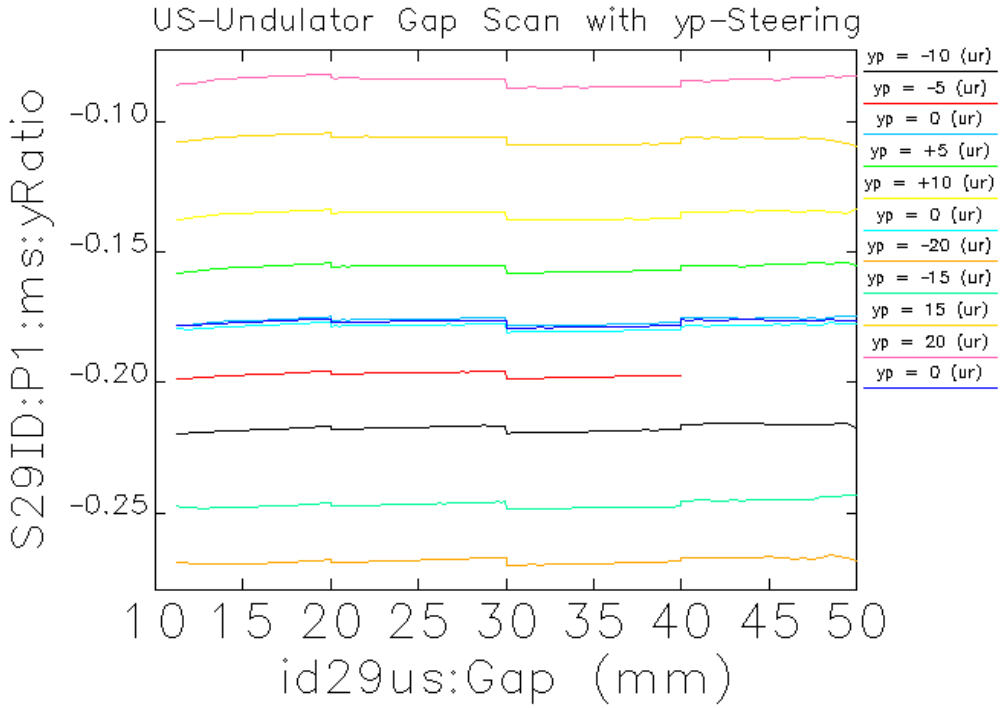

Courtesy of Bingxin Yang et al. (BIW 2012)

High-Power Beam Tests

- The first XBPM was successfully tested at 67% of the APS-U power and 50% of design power density with favorable results.
  - Need long-term full-power beam tests in the HHL Front End.
- Signals of new GRID-XBPM are cleaner and has lower signal background by 10 ~100 times than photoemission XBPMs.
  - Smaller apertures are better!
- XBPM readout showed little gap dependence for the total undulator beam power from 17 W to 10.6 kW
- **Additional water-cooling is required for better temperature stability in the chamber wall, detector, and supports**
- **Detector should be decoupled from main absorber body.**

Previous APS-U Project Reviews

- APS-U FE technical review (CD-1): April 12~13, 2011
- Internal technical design review (R&D): April 15,2011
- **High-Power Beam Test: Jan. 16 ~ April 3, 2012**
- Machine advisory committee review: May 1~2, 2012
- Internal technical design review (CD-2): June 14,2012
- Internal physics review: July 18,2012
- APS-U FE technical review (CD-2): July 24~25, 2012
- ANL director's CD-2 review: Sept. 10~13, 2012

Upcoming APS-U Project Reviews

- APS-U DOE CD-2 (Lehman) review: Dec. 4~6, 2012

GRID-XBPM Design: APS Upgrade High Heat Load FEs

- Shorter and compact using only two vertical target absorbers
- Exit aperture adjustable from 3-mm down to 1.2-mm, negotiable with users.
- Center-of-mass measurement for vertical position.
- Integral-sampling for horizontal position measurements.
- Detector is decoupled from main target by a bellows and its vacuum is isolated by Be-Window.
- Either Silicon PIN diodes or Diamond
- Granite table for thermo-mechanical stability.

Design: GRID-XBPM Assembly

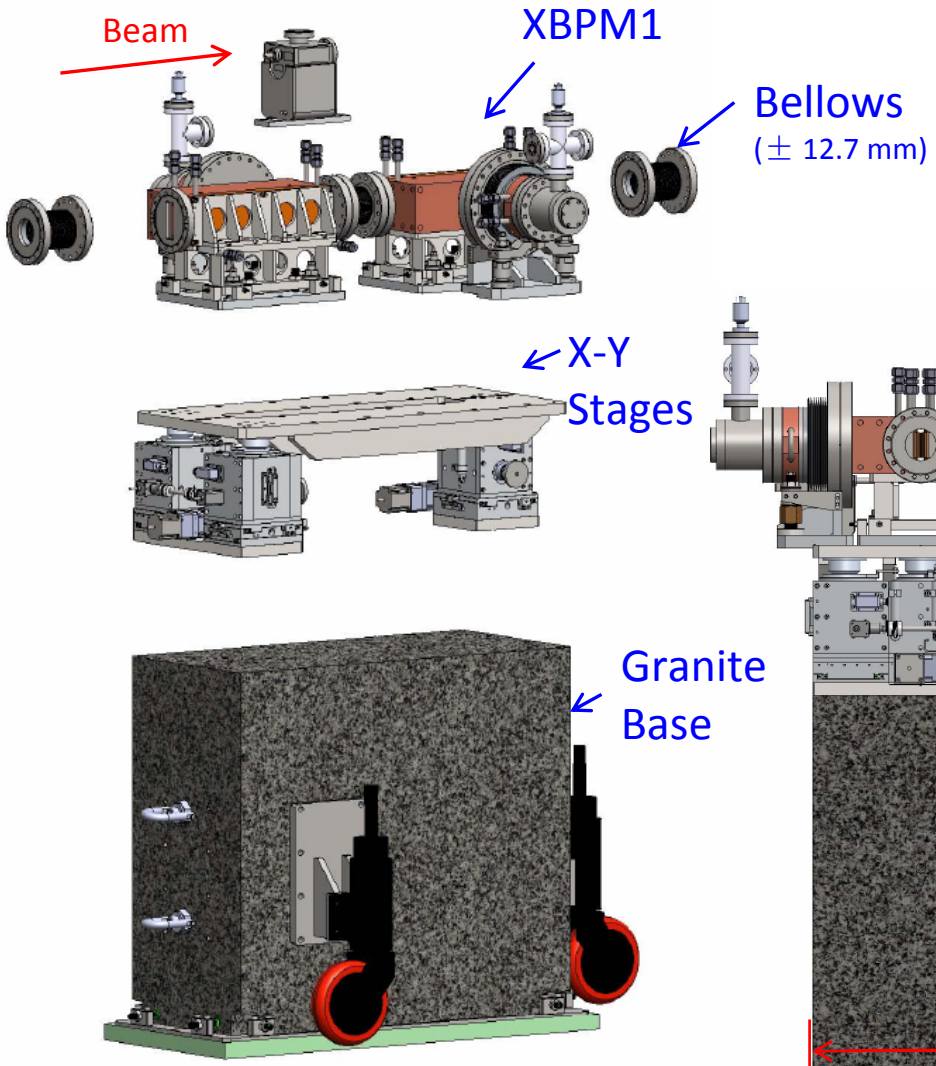

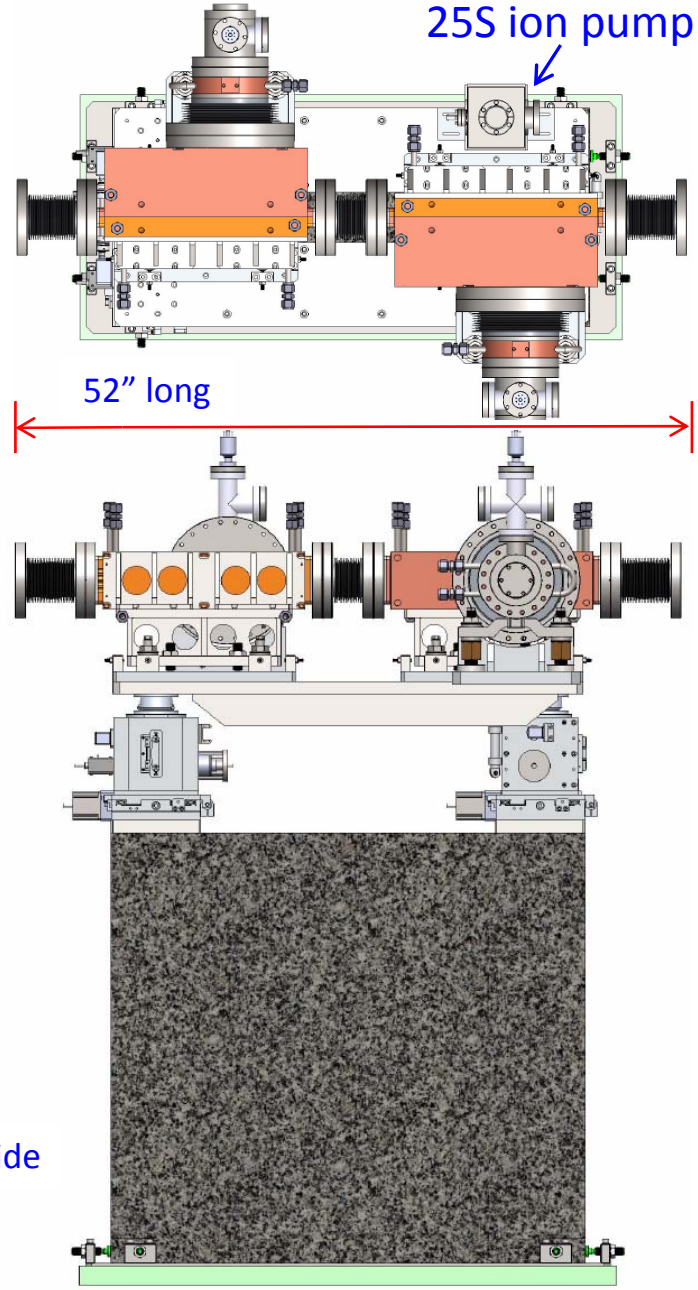

Total weight: ~1,500kg

Design (cont'd): XBPM1-H1 details

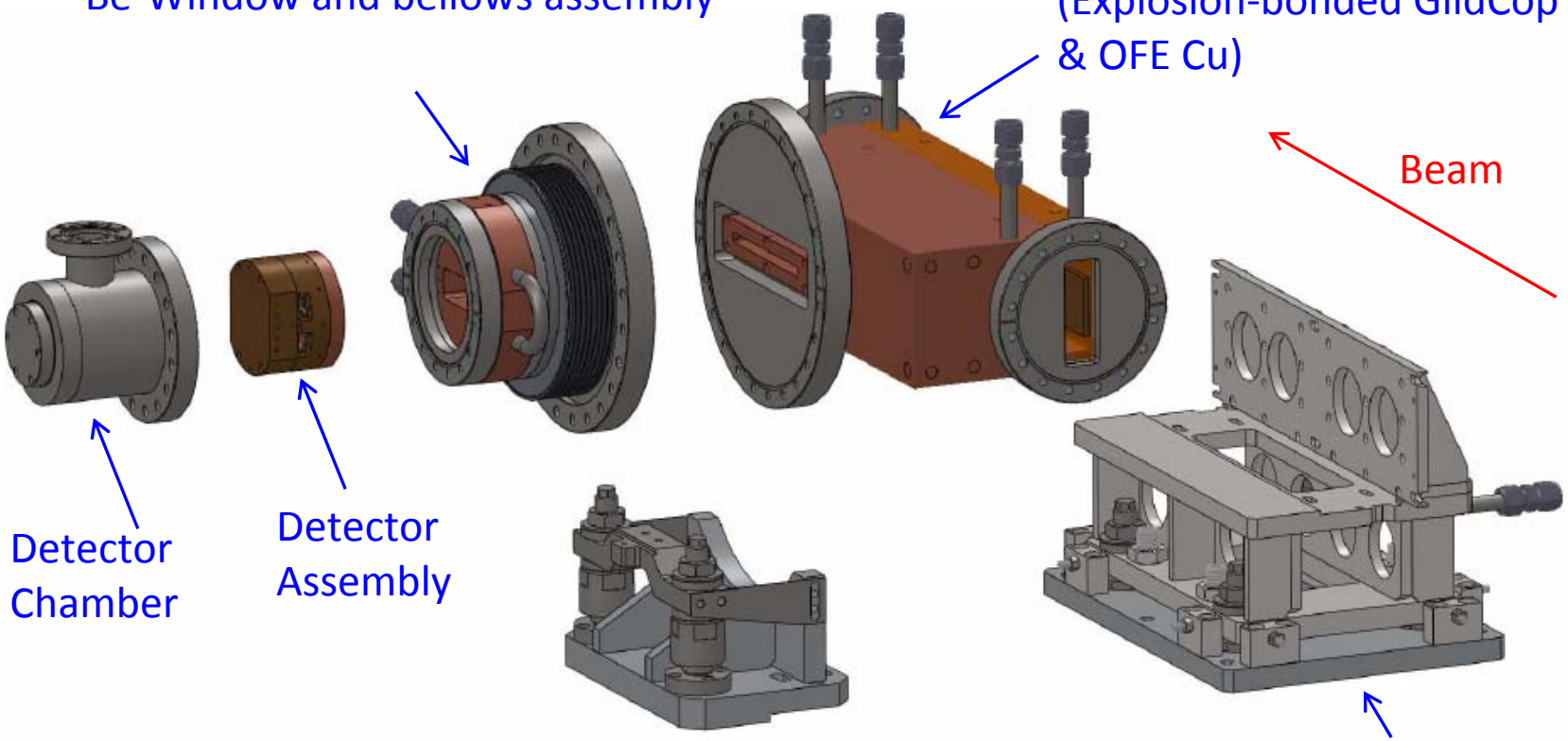

Incidence angle	1.0° (~17.5 mrad)
Weight	~100kg

Design (cont'd): Detector (Diagnostics)

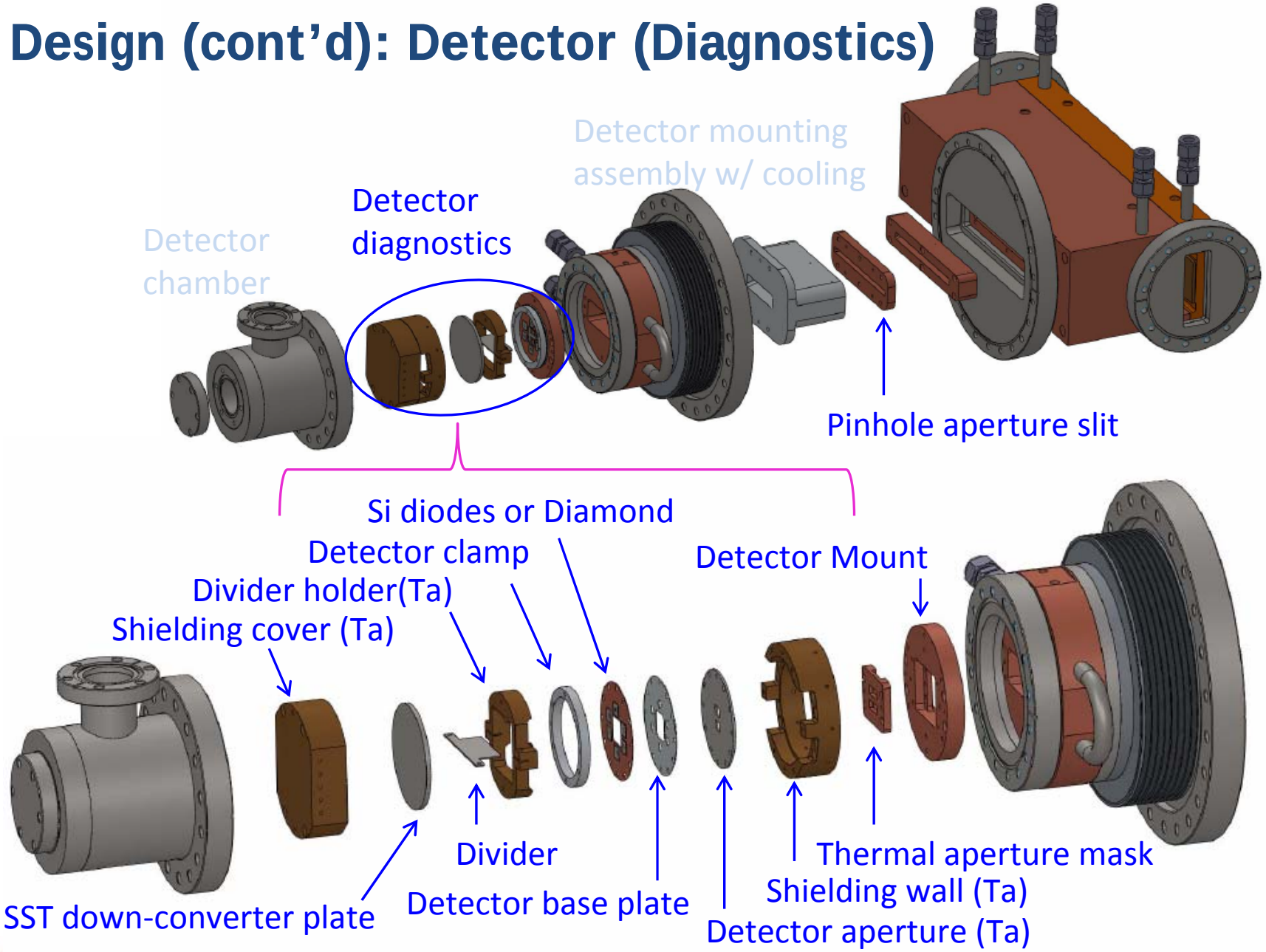

Simulation: Power calculation

Source Parameters	U3.3, k=2.699, 150mA, N=144	Distance (m) from the source
Total Power (W)	16,953	
Normal Peak Power Density ($kW/mrad^2$)	487	
Peak Power Density (W/mm^2)	1,903	16
	1,686	17
	1,487.2	18.1
	1,350	19
	1,301	19.35

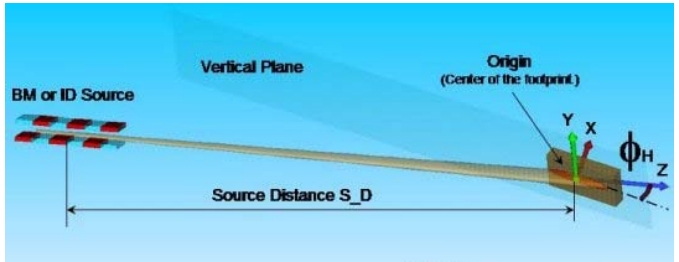

From www.aps.anl.gov/APS_Engineering_Support_Division/Mechanical_Operations_and_Maintenance/Calculators/beampower/ID_power.html

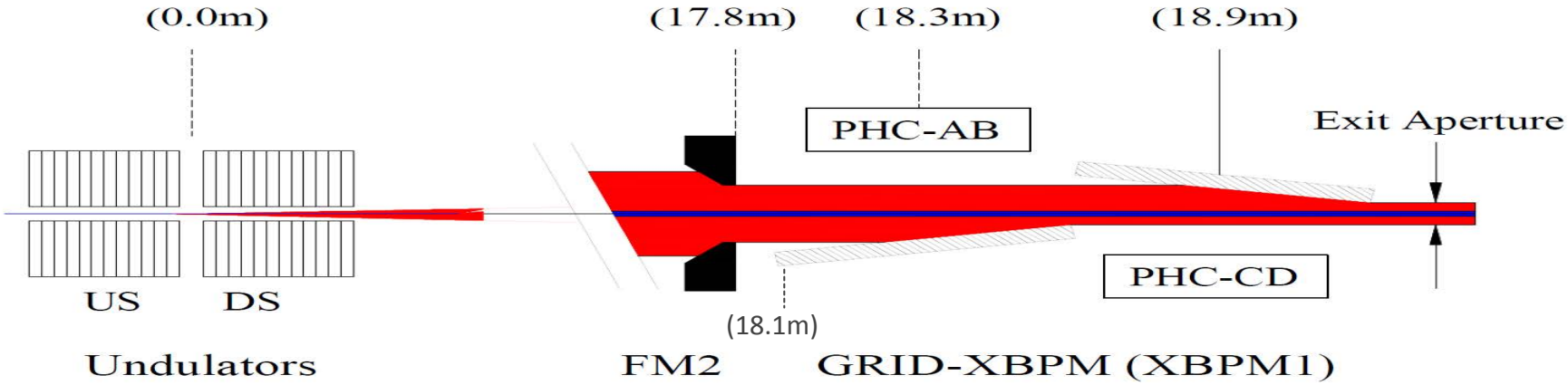

Simulation results: Beam miss-steered, (1.3,-4.5)

Component	GRID XBPM1
Operating Condition	2 x U33s under 150 mA
Distance to source (m)	18.1
Peak normal incidence power density (W/mm^2)	1,487.2
Incidence angle	1.0° (~17.5 mrad)
Average power density on wall under 200mA (W/mm^2)	roof: 0.018
	side: 0.022
Total normal incidence x-ray power seen by components (W)	8,745.1 (1.3, -4.5) miss-steered
Peak temp. on GlidCop / Cu (°C)	238.0 / 126.0
Peak temp. on main/wall cooling channel wall (°C)	106.1 / 34.8
Temp. range on Pre-mask (°C)	33.4~30.9
Max. stress in GlidCop (MPa)	386.3
Max. stress in OFE Cu (MPa)	141.3
Max. stress in Pre-mask (MPa)	47.4

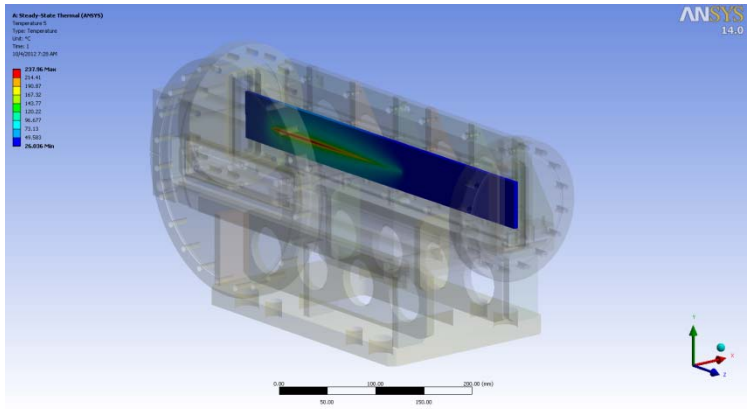

Temperature distribution of GlidCop

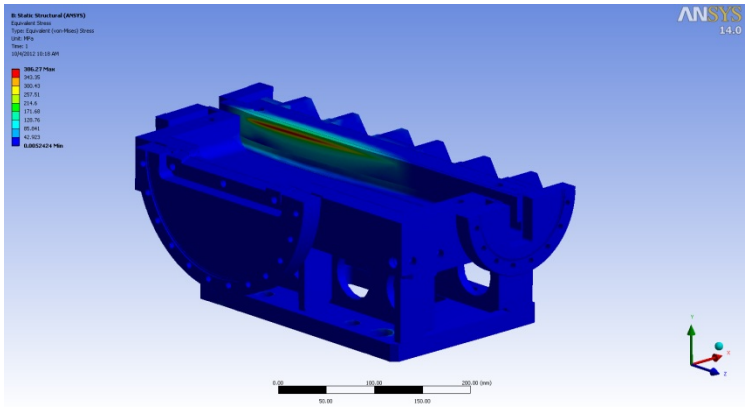

Stress distribution

Current status and future test plan

- Design of GRID-XBPM for HHL FE is completed.
  - Construction drawings for long-lead-items are released last week.
  - 90% engineering drawings for HHL FE GRID-XBPM are completed

- Future test plan
  - Final version of the GRID-XBPM will be tested in actual front end area
  - Radiation effects on components and system will be investigated.
  - Vibration and thermal stability will be evaluated

APS-U HHL FE w/ GRID-XBPM (Refer to Yifei Jaski's Talk)

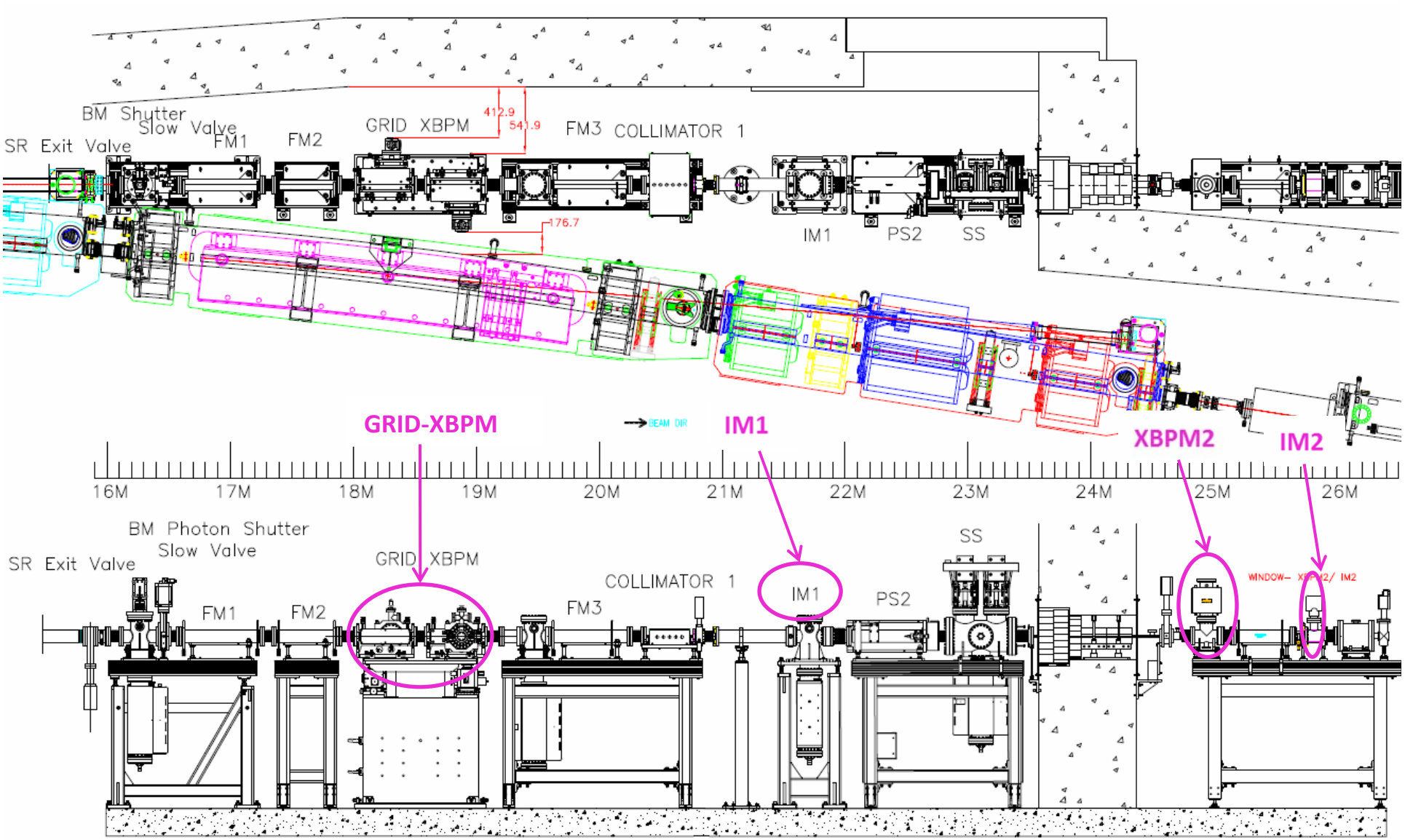

Summary

- The first high-power tests of the GRID-XBPM at S29-ID FOE were successfully performed and demonstrated to work very nicely with 2 UAs.
  - GRID-XBPM has lower signal background compared to photo-emission type.
  - Thermal measurements showed the need to add additional water-cooling to maintain temperature stability of the chamber wall, detector, and supports
- Design of GRID-XBPM for HHL FEs is completed.
  - Construction drawing for long lead items were released.
  - Added cooling channels to provide for better thermal stability.
  - Detector is decoupled from main target body by a bellows and its vacuum is isolated from the ring vacuum by Be-window.
- To accommodate the GRID-XBPM, FE modifications were considered to provide adequate space.
  - Enough space for installation and maintenance of the FE components including the GRID-XBPM.
  - Expect no major installation or maintenance problems.

GRID-XBPM Development Team

The presented materials are the effort of the XBPM Development Team

- Original members (since 2009)
  - Soonhong Lee, principal mechanical engineer
  - Pat Den Hartog, AES-MED Group Leader
  - Bingxin Yang, physicist
  - Glenn Decker, accelerator physicist, Diagnostics Group Leader
- APS-U front end integration
  - Mohan Ramanathan, APS-U L1 manager + S29 manager + many other roles
  - Yifei Jaski, lead engineer for front ends
  - Frank Westferro, mechanical engineer
- S29-IDA Test
  - Try Leng Kruy, vacuum engineering, installation
  - Naresh G. Kujala, monochromator operations and measurements
  - Jeff Collins, Infra-red imaging and thermal measurements
  - Steve LaBuda, Ted Grodecki, and MCR operators, XBPM data recording
- Helping hands
  - Roger Dejus, original undulator and wiggler source programs (us & ws)
  - Hairong Shang, SDDS programming
  - Josh Downey, designer

Thank you for your attention!

Extra Slides

XBPM1-V: Exploded view

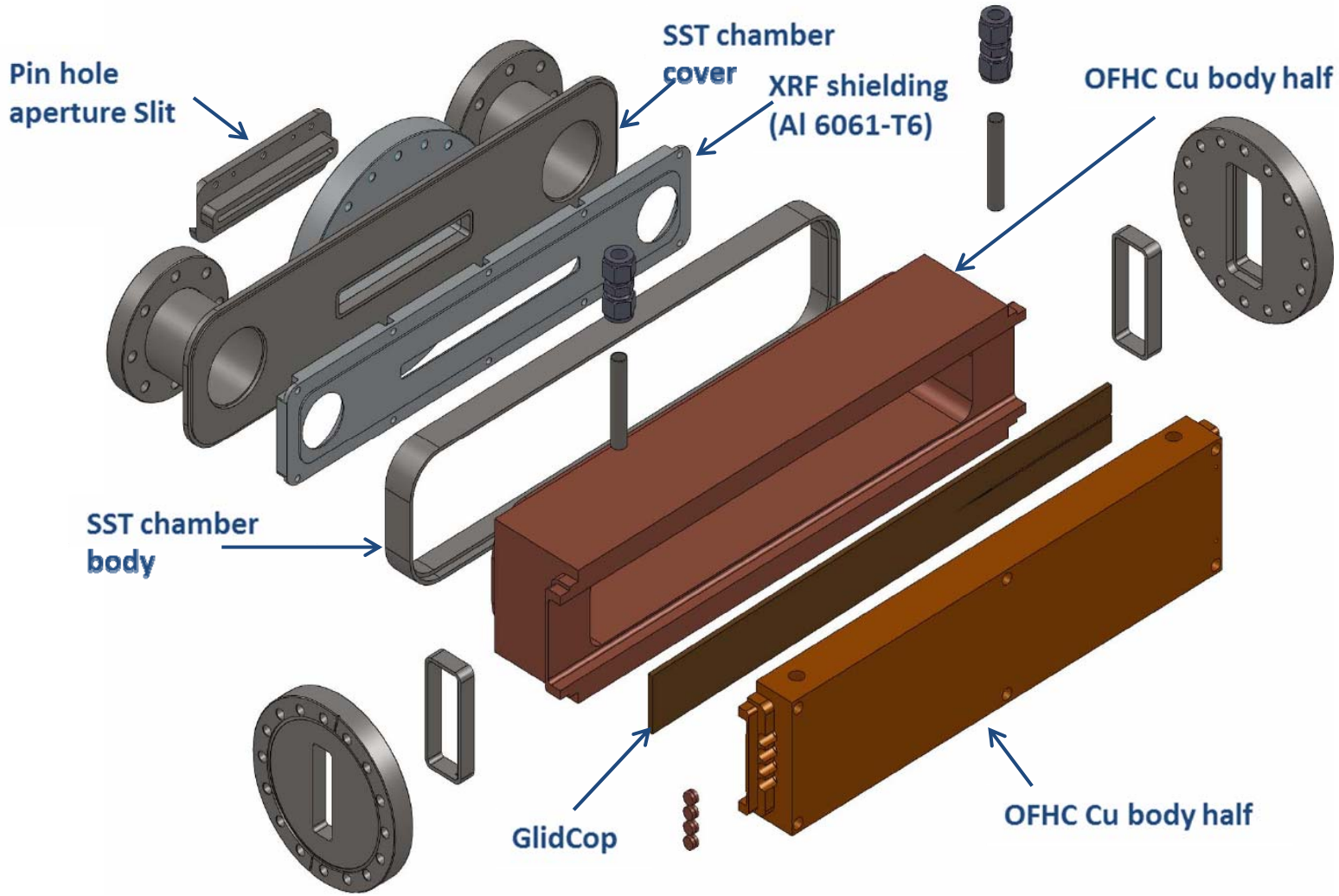

Incidence angle	0.8° (~14 mrad)

XBPM requirements for APS Upgrade

- Original stability specification (AC) * → 5% of the APS particle beam size/ divergence
- Translating this 5% requirement to the present low-emittance / low coupling lattice results in**

APS Upgrade beam stability goals (XBPM @ z = 18.6 m)

		RMS AC Motion (0.01 – 200 Hz)	RMS long term drift (1 week)
Horizontal	Angle stability goal	0.53 μrad	1.0 μrad
	X-ray beam @ 18.6 m	10.3 μm	19.3 μm
Vertical	Angle stability goal	0.22 μrad	0.5 μrad
	X-ray beam @ 18.6 m	4.1 μm	9.4 μm

XBPM resolution / stability goals (50% of stability goals)

	RMS Resolution (0.01 – 200 Hz)	RMS long term drift (1 week)
Horizontal	7.3 μm	13.6 μm
Vertical	2.9 μm	6.6 μm

*G. Decker presented to 2005 DOE-BES Review at APS
** http://www.aps.anl.gov/asd/oag/SRSourceParameters/sourcePointResults

AC Beam Stability Goals

Om Singh
NSLS-2 Beam Stability Workshop
BNL, April 18-20, 2007

- SR Emittance ε_e= 3.1 nm; coupling = 0.8%
  1. Presently σ_x = 280 μm; σ_y = 10 μm; σ'_x = 12 μrad; σ'_y = 3 μrad

- Beam stability goal and present performance
  1. Stability goal* (AC) → 5% of the APS beam size/ divergence

Goal / Present Performance

		x, y (μm rms)	x', y' (μrad rms)
Goal	(0.017 – 200 Hz) →	14.0, 0.5	0.60, 0.22**
Present	(0.017 – 200 Hz) →	6.0, 2.0	0.26, 0.34
Broadcast	(0.017 – 30 Hz) →	0.8, 0.6	

*G. Decker presented to 2005 DOE-BES Review at APS
** Includes photon divergence contribution, 7th harmonics, APS undulator A

Why do we need new XBPM?

Because undulators steer the electron beam:

- For a typical undulator: effective source point may shift by > 10 μm (by undulator end segments); effective beam angle may differ by more than 5 μrad.
- This shift depends on undulator gap (field).
- RFBPM has instrument effects: offset drift

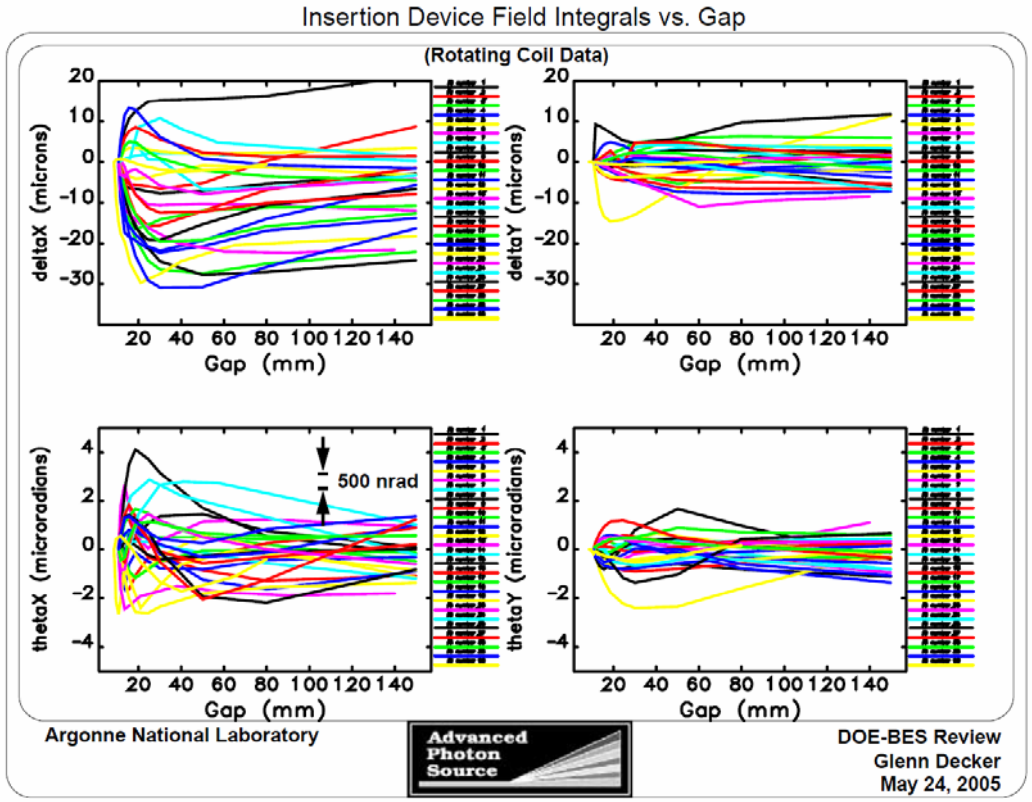

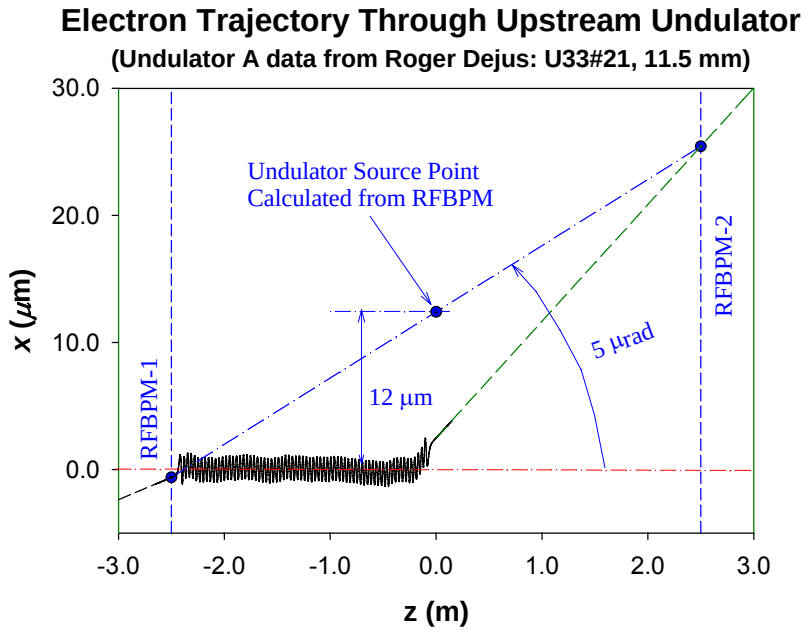

APS-U Physics Requirements cannot be met without direct measurement of x-ray beam position monitors.

Re-direction of Stray Photons by Girder Alignment*

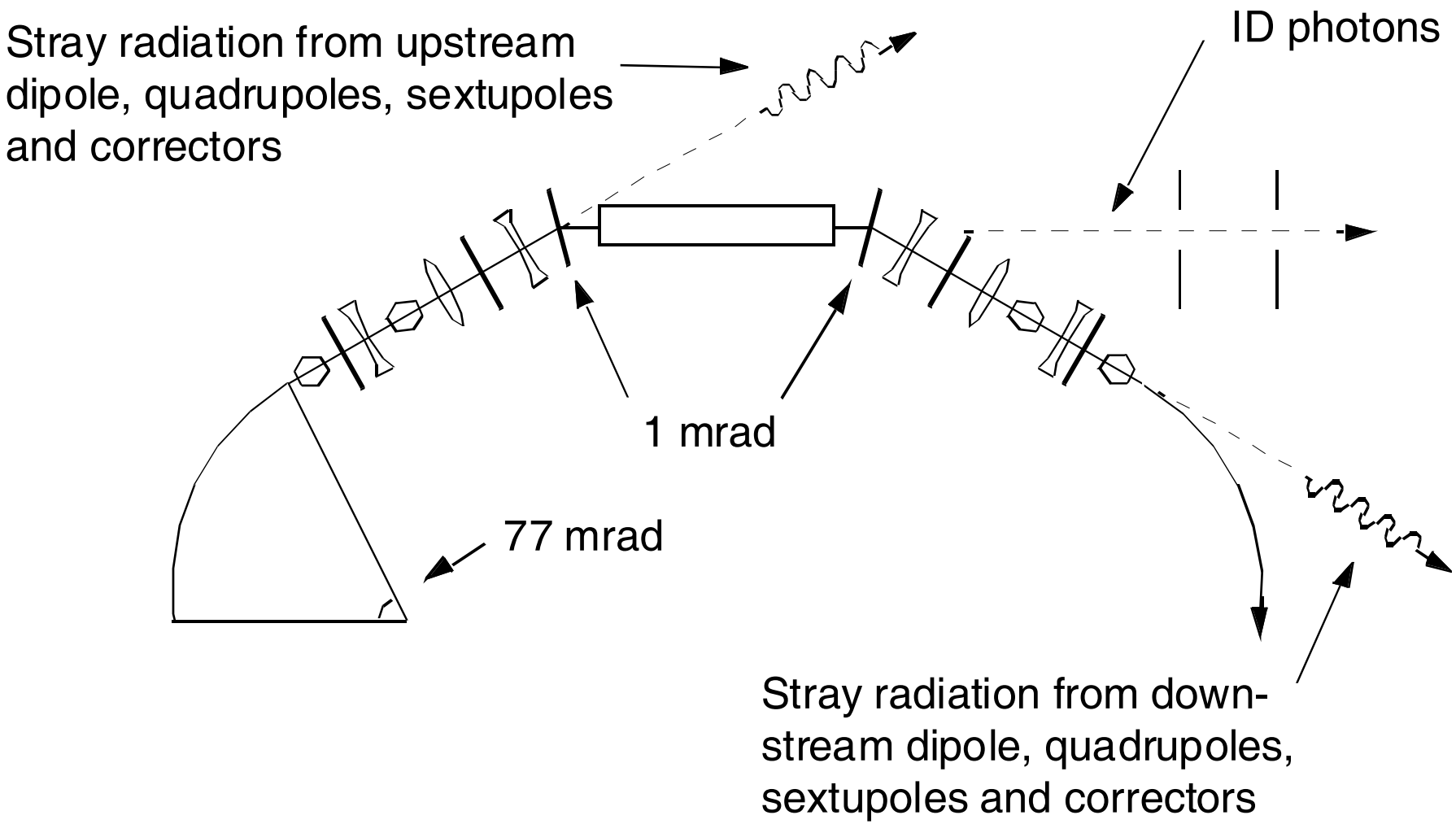

*Phys. Rev. ST Accel. Beams 2, 112801 (1999)

(G. Decker)

Simulation results: Thermal Bumps

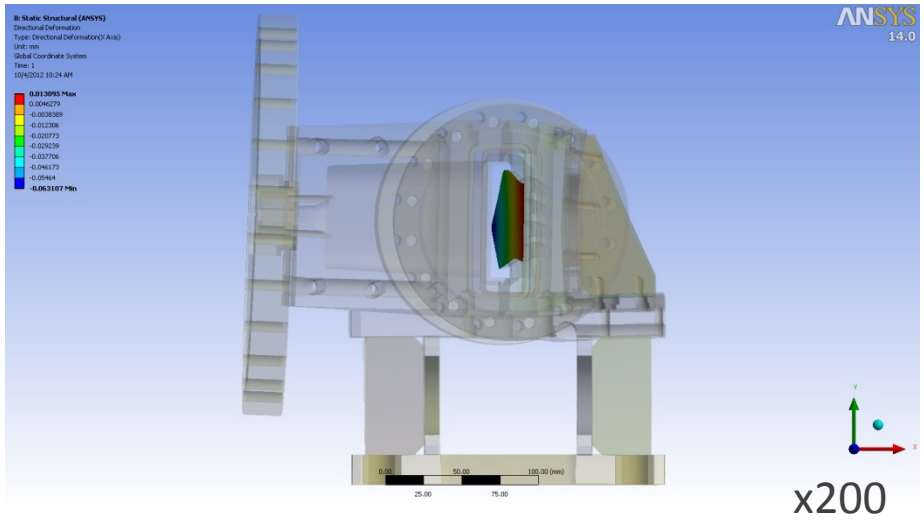

Miss-steered Case: max. 63.1 µm (-X direction)

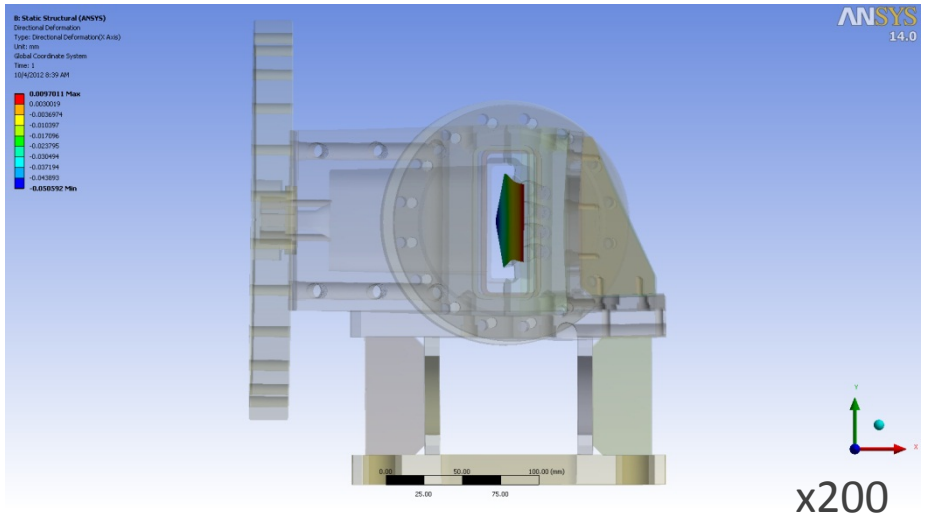

Normal Operation : max. 50.6 µm (-X direction)