The Construction Status and Stability Work at MAX IV

Brian Norsk Jensen

MAX IV LABORATORY

MAX IV – overview

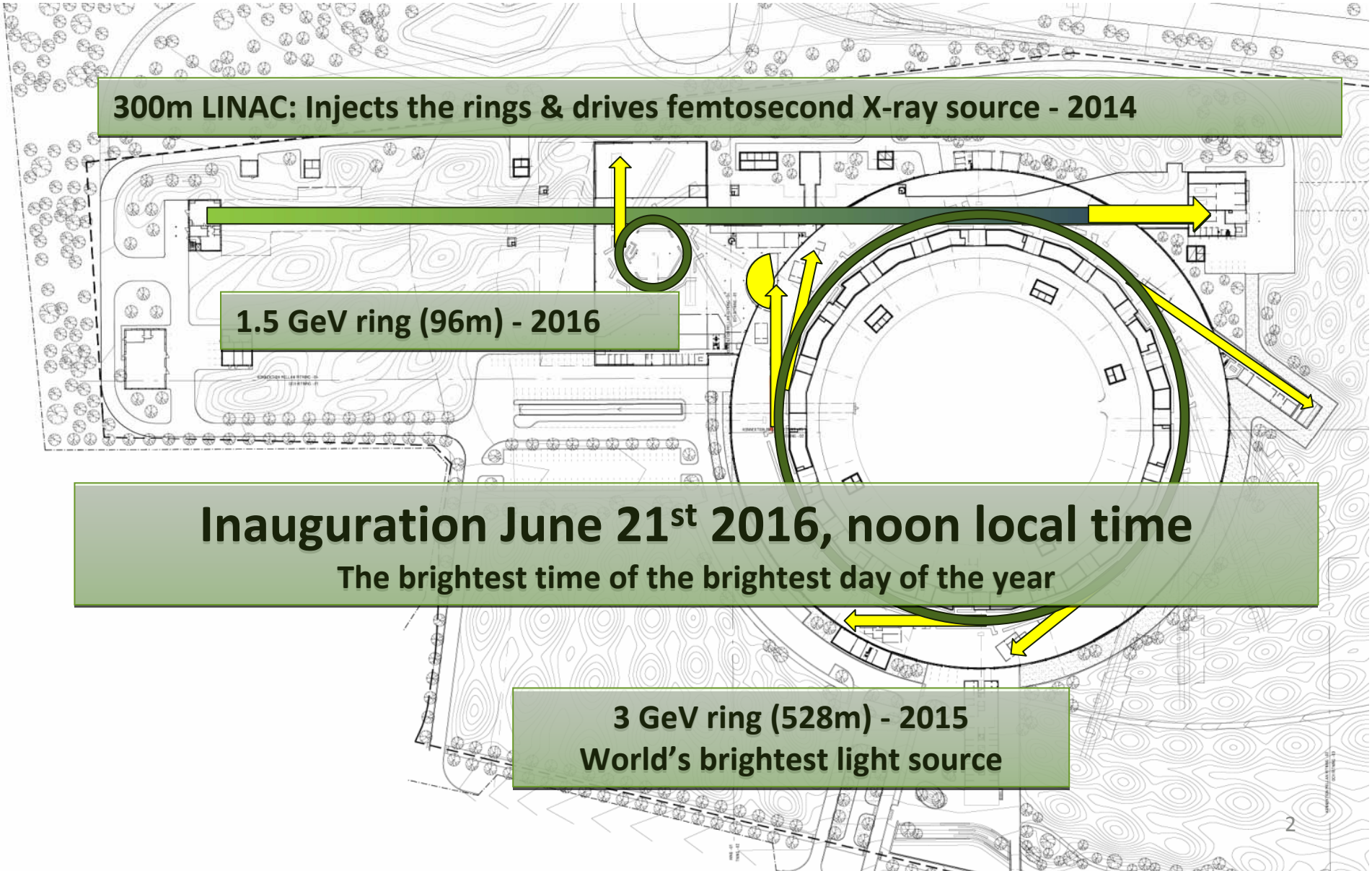

MAX IV – a world leading X-ray source

3 GHz warm Linac

	Injector	SPF
End Energy (GeV)	3.0	3.0
Charge/pulse (nC)	0.3-3	0.1
Bunch length (fs)	3000	30-100
Rep Rate (Hz)	<10	100
Emittance (mm mrad)	<10	0.4

Storage Rings

	3 GeV	1.5 GeV
Circumference (m)	528	96
Nr of long straights	20	12
Hor emittance (nm rad) appr.	0.3	6
Hor RMS beam size (μm)	45	200
Vert RMS beam size (μm)	1-4	10

Top-up injection in both rings, 500mA stored current
An additional 1.5 GeV ring will be built in Krakow (Solaris)

September 2012, Photos: Perry Nordeng

Some Stability Work Conclusions

- Conservative goal: 20-30nm RMS (>5Hz)
  - Same Goal for Machines and Beamlines
  - Some Short Bursts are present and can be tolerated
- Increase Stiffness and Correlation of motions. "**The Floor is the Backbone of the Machine**"
- Preserving the Stiffness when Designing Supports, "**Moving the Floor to the Magnets**"
- Only Sources can be (Passively) Isolated
- To be Cost Effective we Approach the Challenge on Several Fronts:
  - Civil Engineering, Source Isolation, FOFB, Increase Correlation and Eigen Frequency, "55Hz", Local solutions,…

Measurements

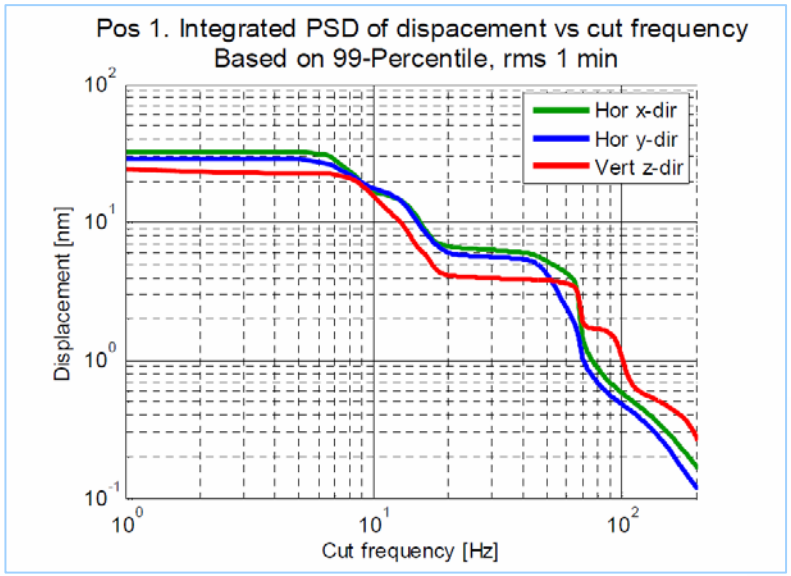

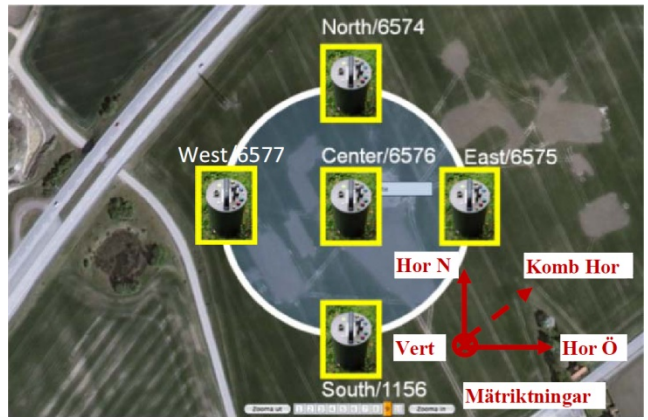

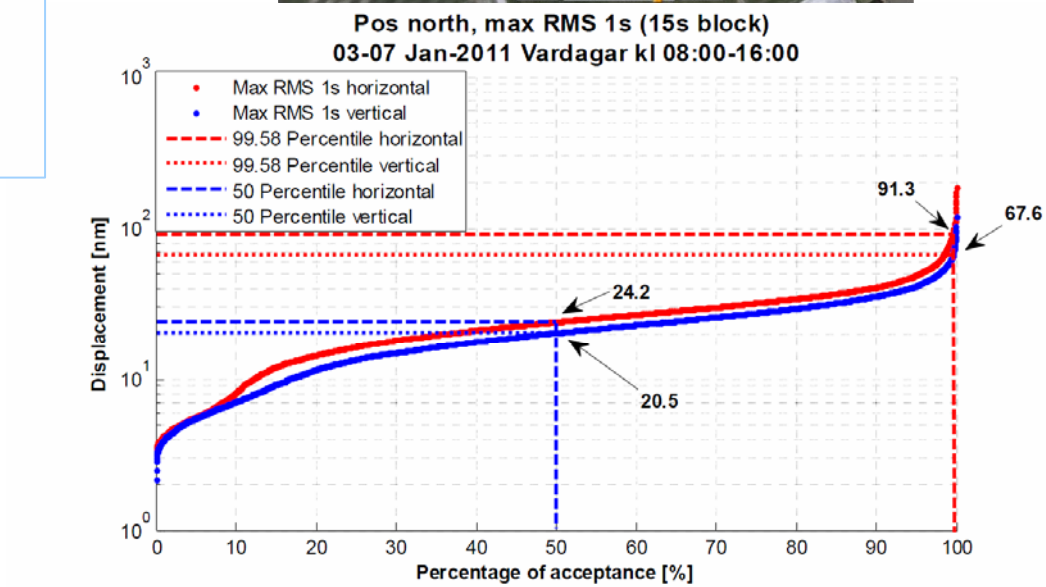

Figur 7.3: Antal överskridelser per timma som kan accepteras (percentilen) bestämmer RMS värdena som används som indata till beräkningarna .

Example: Civil Engineering

- A collaborative project work with the construction company, many participants
- The building is a structural part of our machines and instruments
- MAX IV takes responsibility in order to reach overall stability goals with cost effective solutions

MAX IV LABORATORY

Civil Engineering

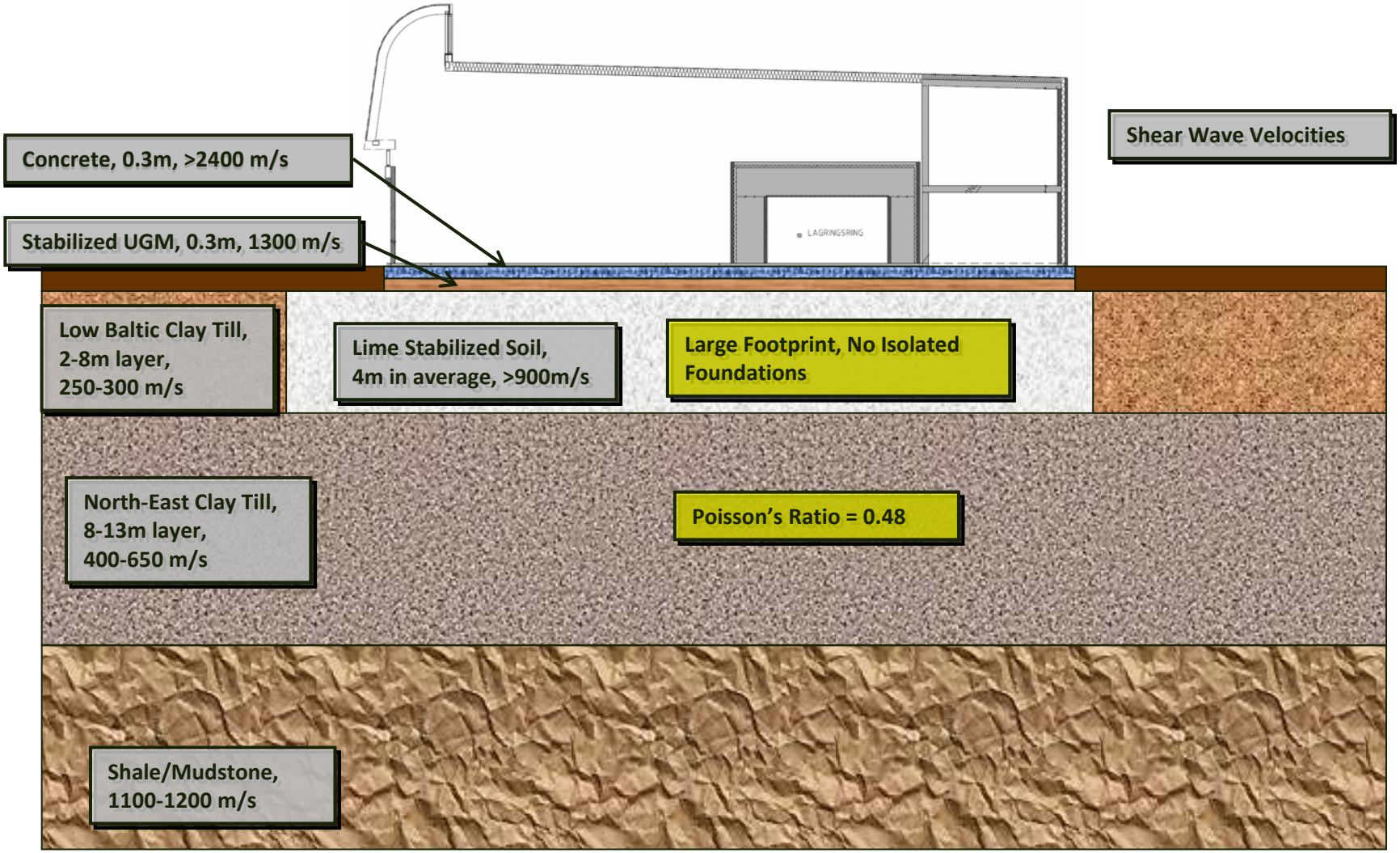

www.ekdahlgeo.se

Example: Water Pulsation Isolation

- Pulsation Reduction in main supply of Cooling Water
- Air Balloon works as an internal Spring
- Concrete Inertia Blocks on Springs
- Further investigations for Beamline Use to come

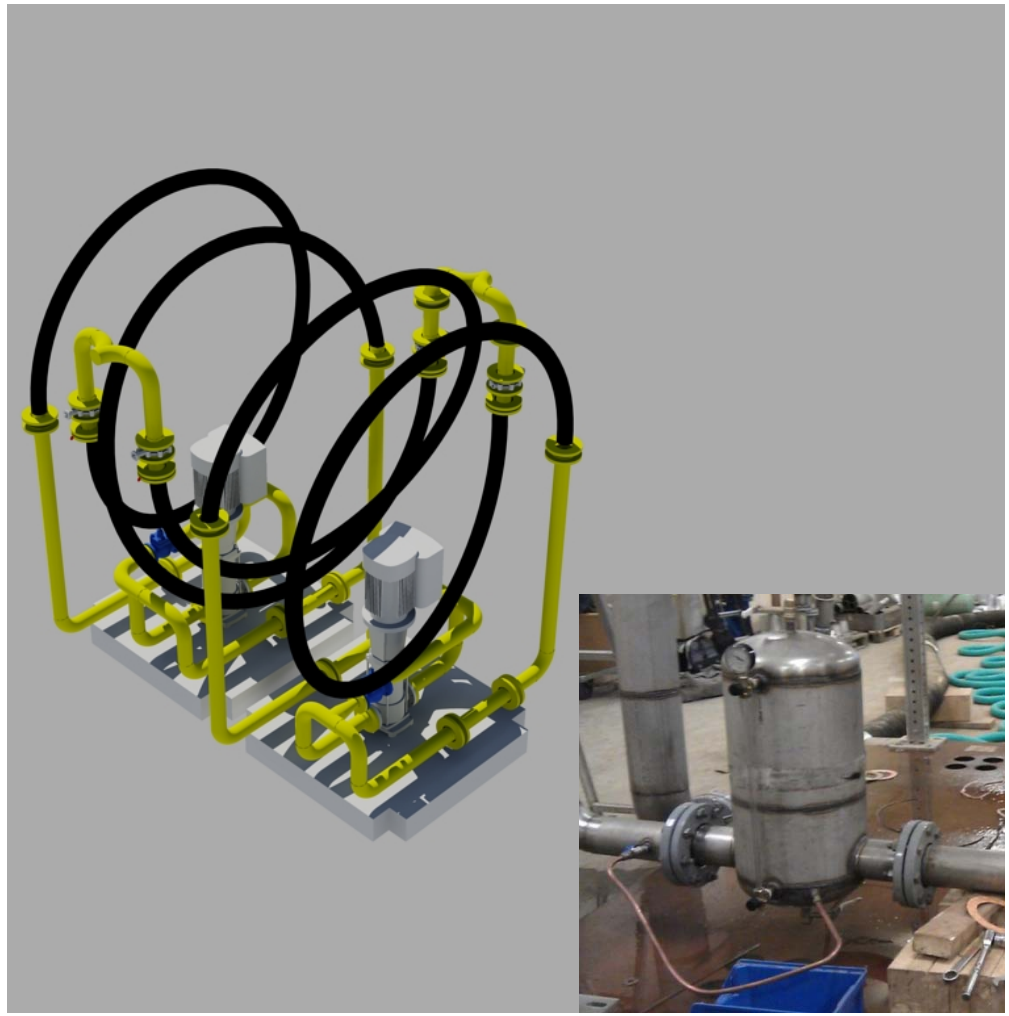

The “Stable Supports” Project

- Alignment Staff and Mechanical Engineers
- Find Mechanical Solutions to given Problems
- Discussions, FEA and Prototypes
- Involved when Procuring Beamline and Accelerator Components
  - Technical specifications
  - Design Reviews
  - Calculations, Enhancing Designs, Testing, …

Example: SPECIES, a New MAX II Beamline

- The “55”Hz Goal
- None of the vendors could document their stability performance
- Deep Interaction with the vendor
- Modifying designs for better stability and alignment

Example 3GeV ring Magnets

- Kinematic screws as part of the structure
- Positioning
  - Easing alignment
  - Fiducialization
  - Adding stiffness
  - Service accessibility

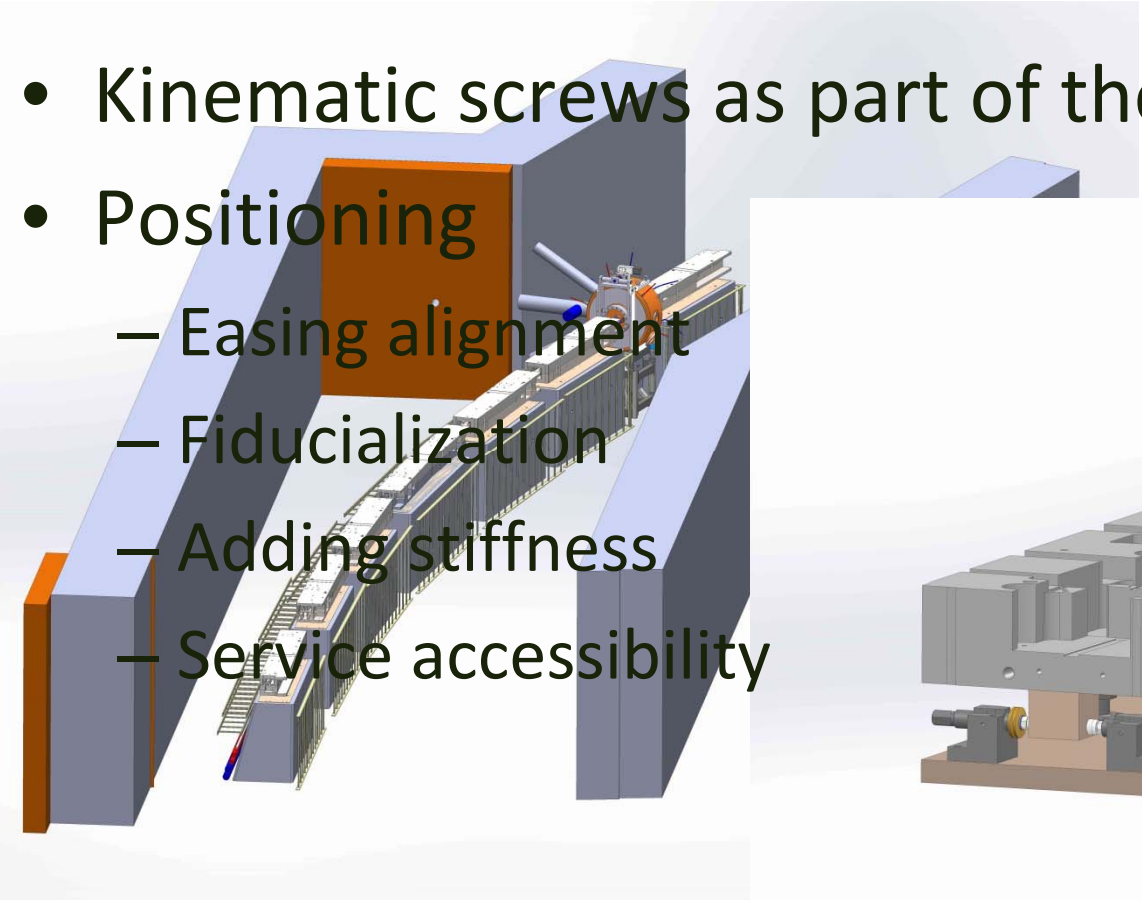

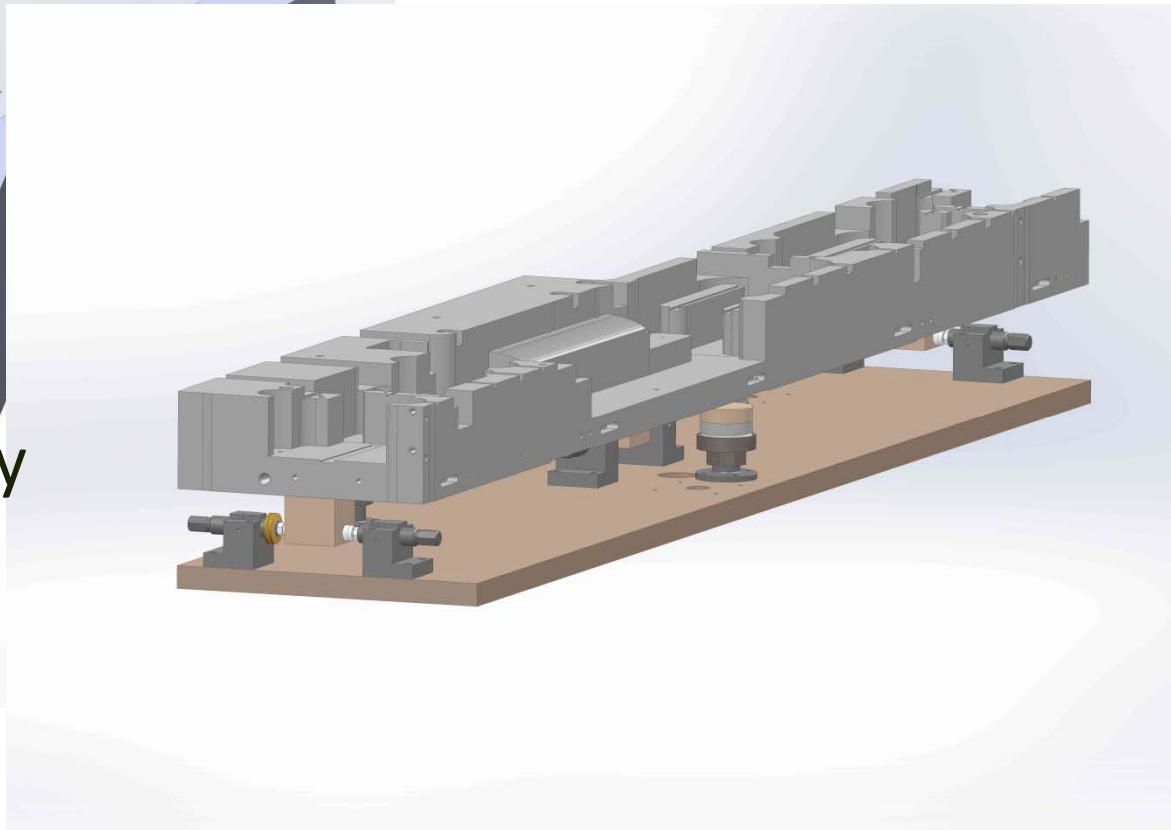

3GeV Ring Magnets

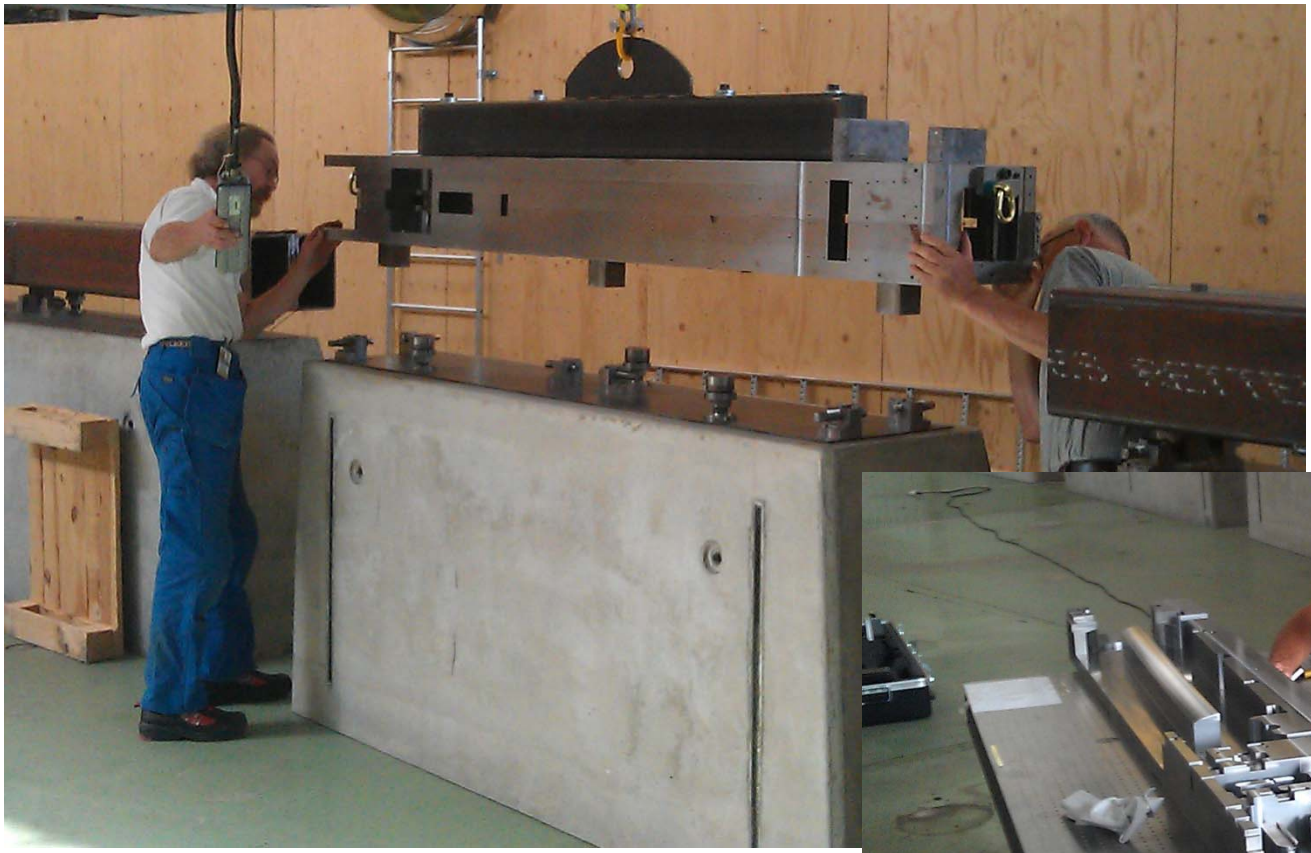

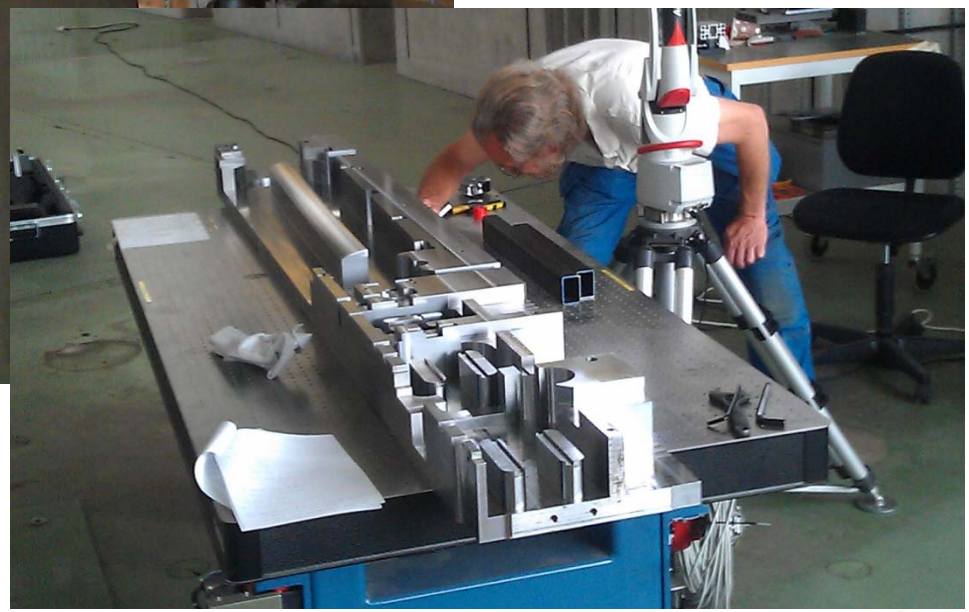

Photos: Pawel Garsztka

Example: The Linac

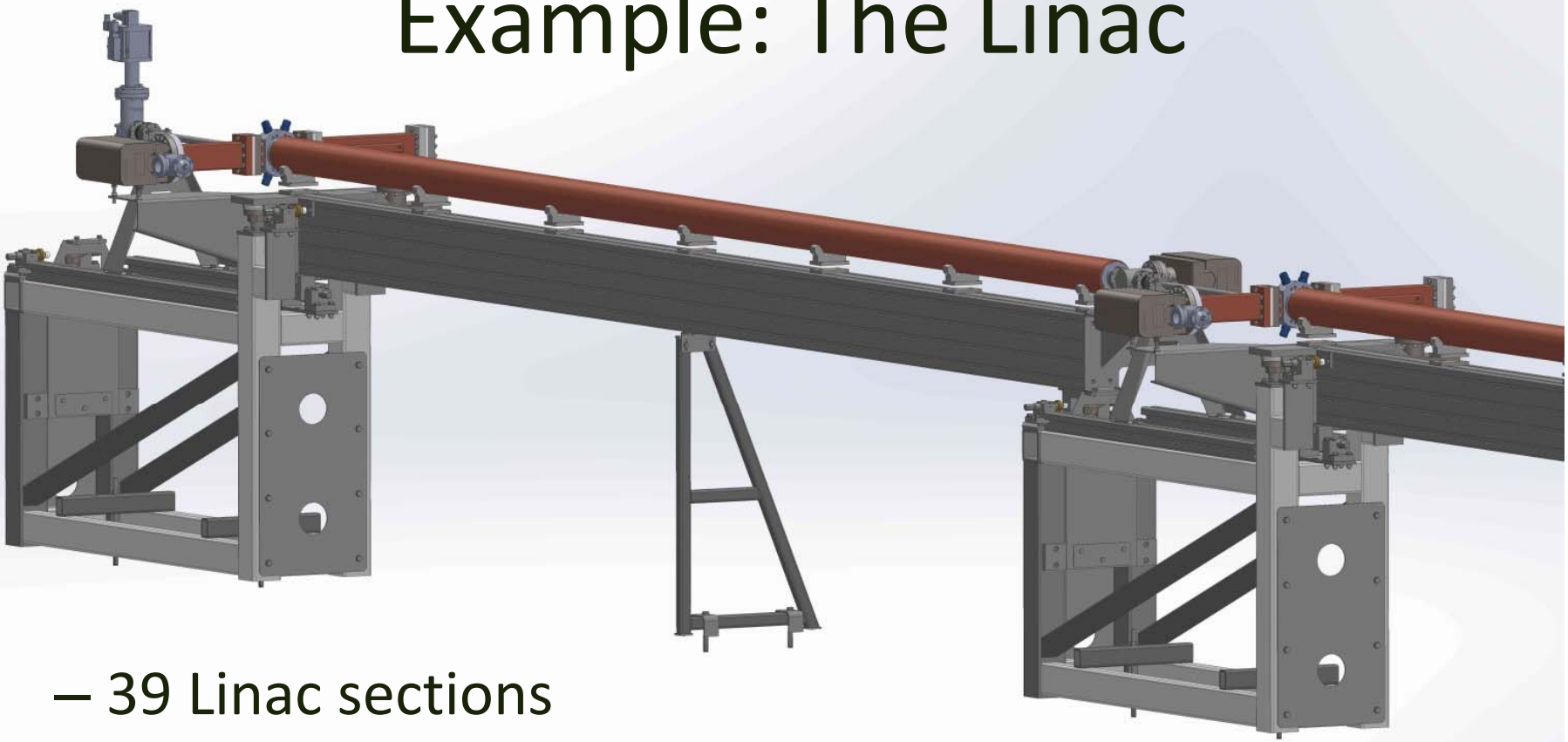

- 39 Linac sections
- Prototypes have been tested
- A few more tests to come

The Story of The MAX IV Bumps

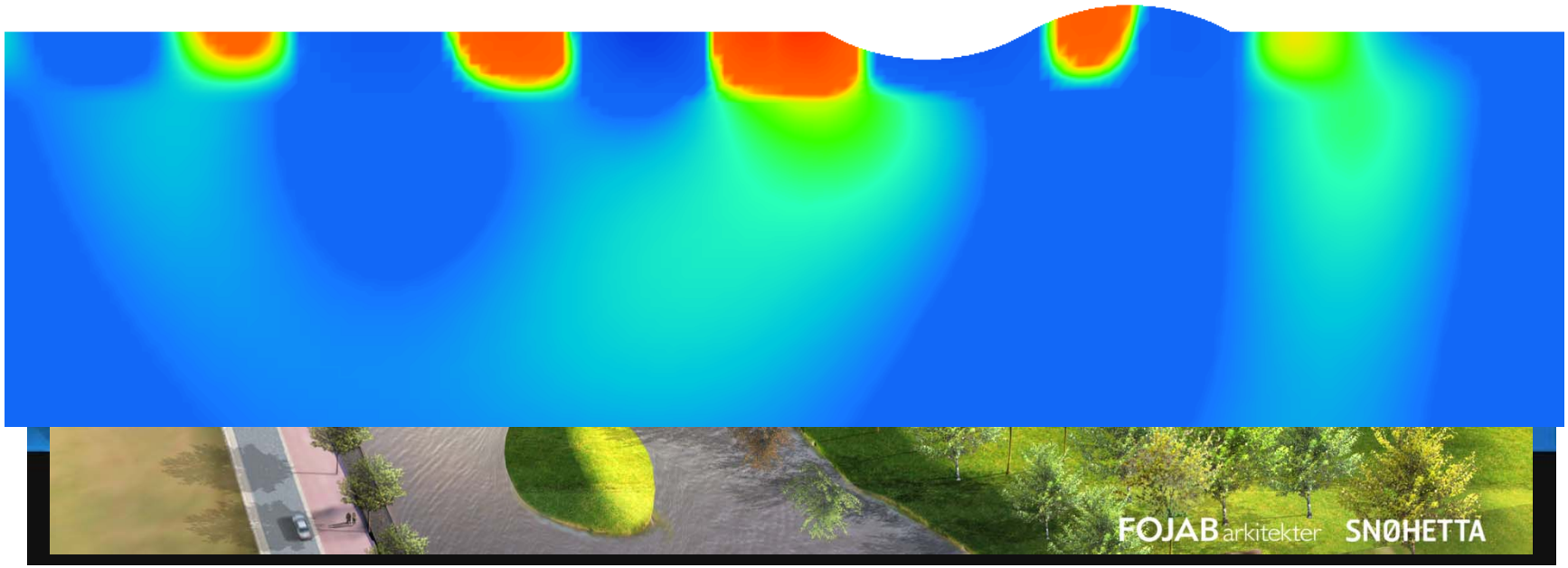

Calculations: Per Jørstad and Peter Persson, LTH

An Idea on Clean Zones or Temperature controlled Zones

TLA: Temperature controlled Airflow

A local Swedish Company:
AirSon Engineering AB

So far only preliminary discussions.

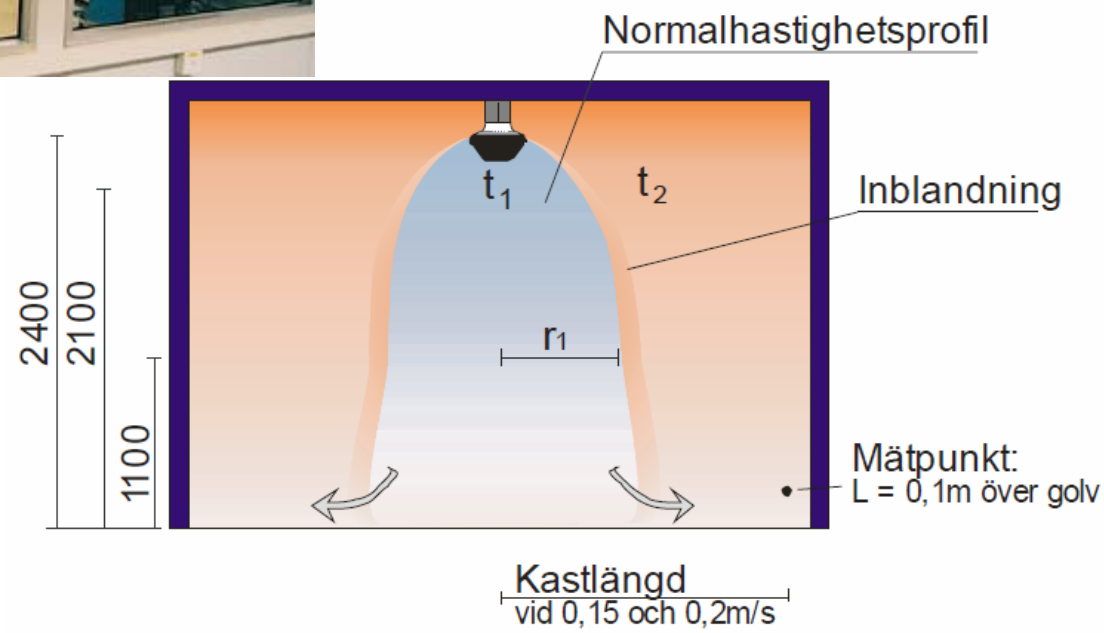

Are we there yet?

- On the To-do list
  - Passive Vibration Isolation Project
  - Vibrations in Cooling Water for Optics
  - Thermal Stability
  - Vibration Monitoring System
  - Lots of Testing
  - …

Thanks !!!

- MAX IV Laboratory staff
- LTH, Construction Sciences
- LTH, Engineering Geology

- Creo Dynamics AB, Ekdahl Geodesign AB, GEO-Danish Geotechnical Institute, NGI-Norwegian Geotechnical Institute, PEAB, PKAB, Qring Technology International AB, SGU-Geological Survey of Sweden, Tyréns AB

Measurements

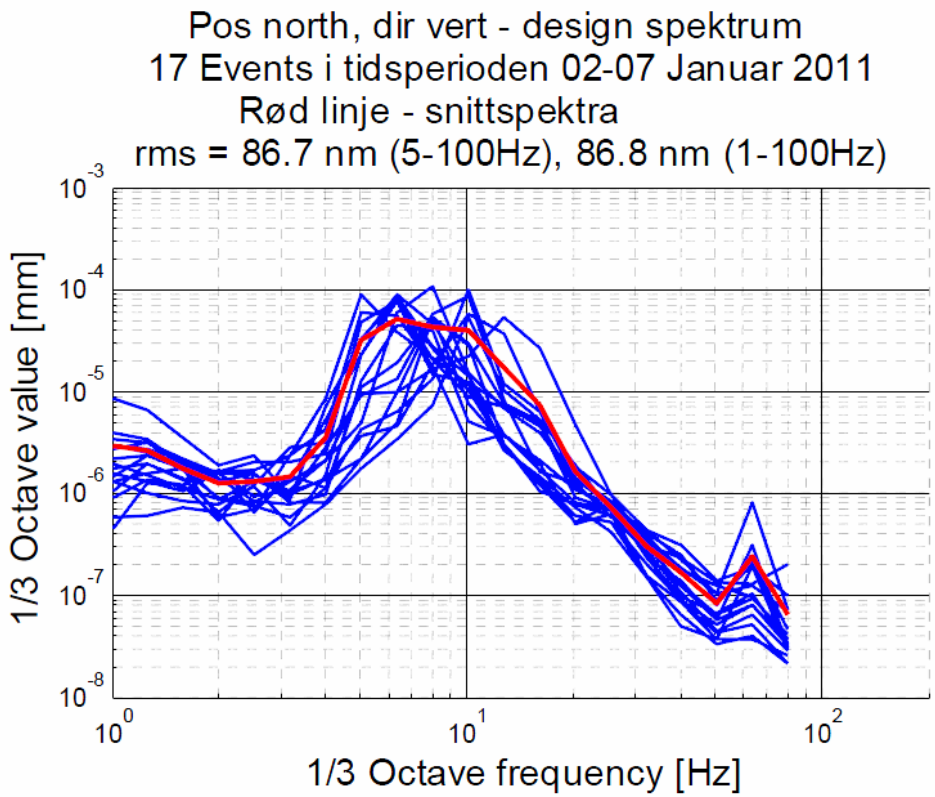

Fig 2. 1/3-oktav spektra i vertikal riktning från 17 events (blåa linjer) och medelspektra (röd linje).

Measurements

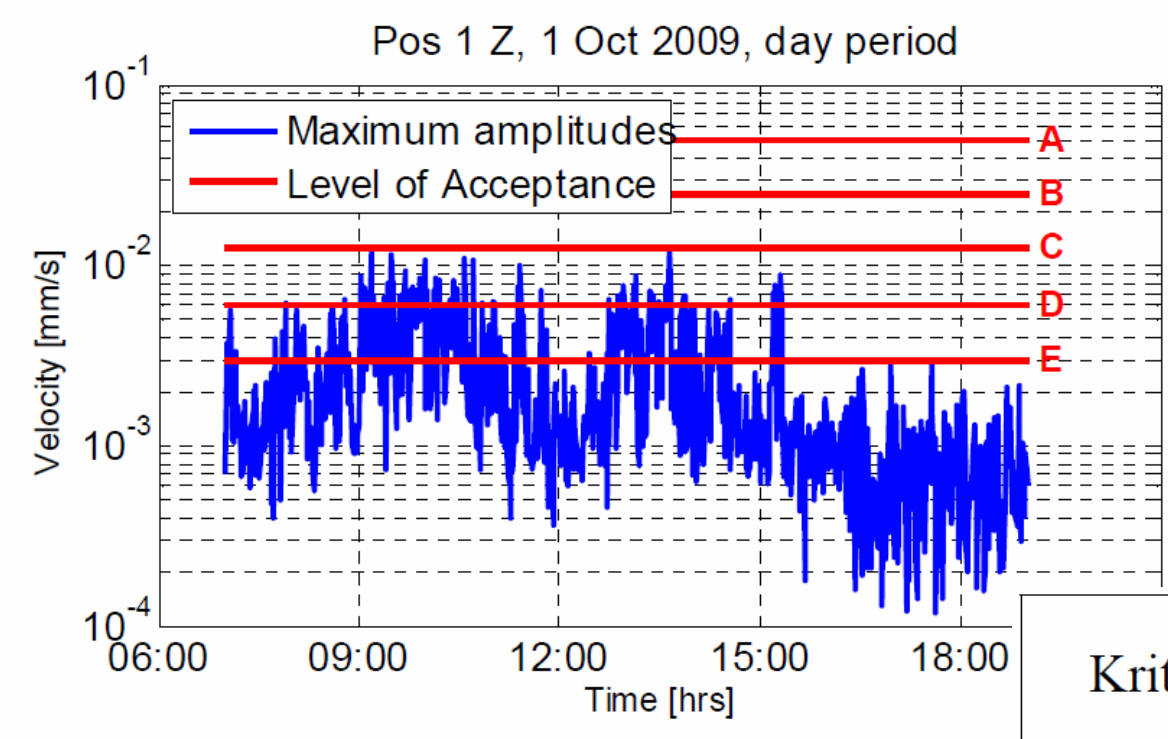

- Green field
- Measured values
- 1min periods

The tolerances for the 1.5GeV ring are less demanding than the 3GeV ring.

Kriterium	RMS amplitud µm/s
VC-A	50
VC-B	25
VC-C	12.5
VC-D	6
VC-E	3

Example: Bunch Compressor

- Machined interfaces to accelerator components
- Stable
- Ease of alignment
- No adjustments on individual items
- Standardized solution for several tasks

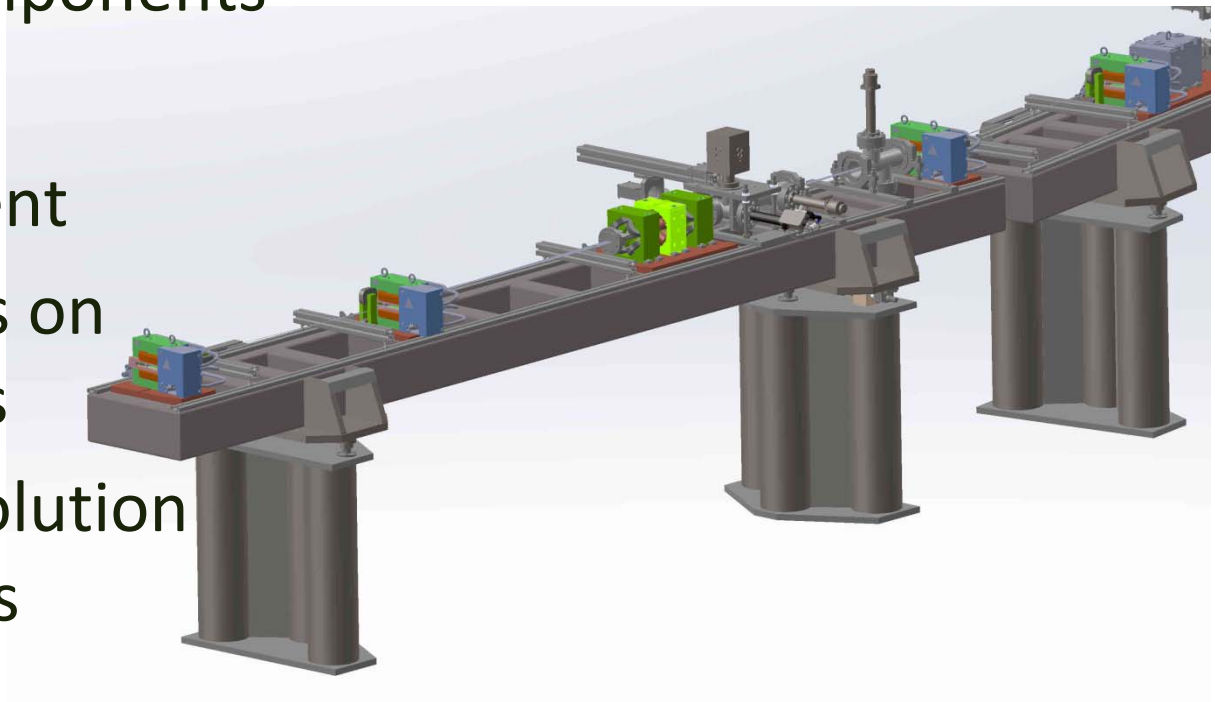

Example: “Tweaking Mechanism”

The Tweaking Mechanism Concept

Preliminary Design Review Proposals

Material:
SS 4212/ EN AW-6082-T4: Rp0.2=110Mpa
SS 4212/ EN AW-6082-T651: Rp0.2=245Mpa
Plate: t=30mm
Weight: 90-100kg

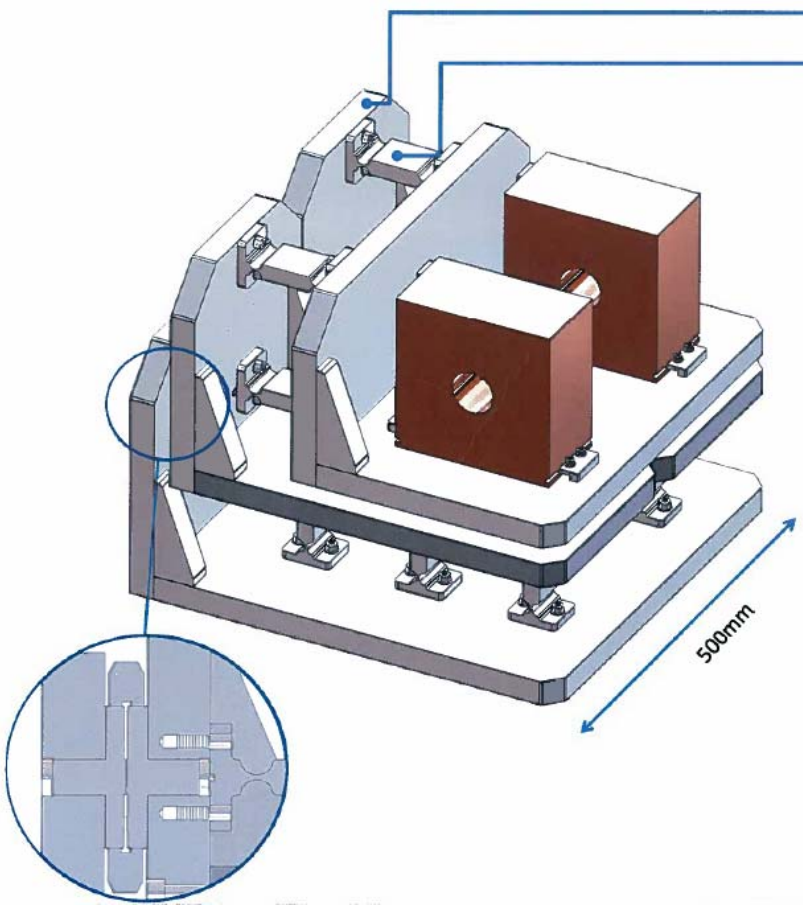

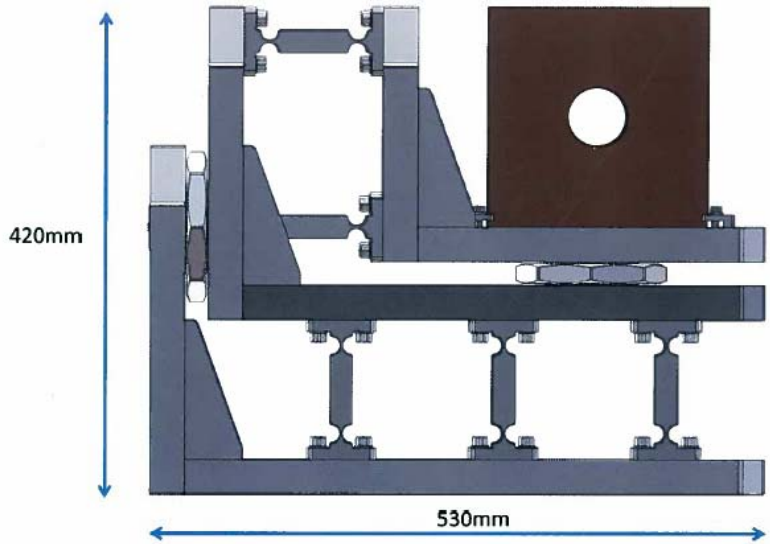

Organization

- One Unit
  - Responsible for Stability
    - Mechanical
    - Thermal
    - Vibrations, pulsations etc.
    - Writing policies and participation in procurements
  - Project leader in the Matrix
  - Contact Person for Internal, External and University resources in the field
  - The Stability and Alignment group

Defining Policies

- For facility components
- Risk management
  - Taking Responsibility for reaching the overall goal
    - Many different solutions
    - Civil engineering
    - External measures
    - Local solutions at Beamlines
  - Cost efficiency
    - We know our machines
    - We will find the best solutions with A Little Help from our Friends