Development of a Cryogenic Calorimeter for Investigating the Heat Load of Superconducting Undulators

Jian Cui, Jieping Xu, Wei Li, Ming Li, Zhengchen Zhang

Soren Prestemon, Torsten Koettig, Ross Schlueter

Shanghai Synchrotron Radiation Facility (SSRF)

Lawrence Berkeley National Laboratory

October 18, 2012

SINAP

中国科学院上海应用物理研究所

Shanghai Institute of Applied Physics, Chinese Academy of Sciences

MEDSI 2012, October 15-19,Shanghai China

Outline

- Introduction
- Mechanical structure
- Data acquisition and control system
- Main milestones
- Commissioning and first online test
- Summary

Introduction

SCU R&D remaining issues:

- Storage ring beam-based heat load (dynamic heat load)
  - Image currents
  - Synchrotron radiation
  - Others
- Magnet measurement system: must work with cold magnet
- Field error tuning, shimming at low temperature

Motivation：

To quantify beam-based heat load of SR, and optimize design of superconducting undulators, LBNL proposes to build the cryogenic calorimeter to investigate the beam-based heat load of SR. SSRF design, construct, and commissioning. Also first test on SR of SSRF this summer.

Members of project team

Lab	Member	Title	Work
SINAP	Jieping Xu	Professor	Project leader of SINAP
SINAP	Dikui Jiang	Professor	Technological consultant
SINAP	Jian Cui	Engineer	Mechanical design, Data acquisition and control system
SINAP	Wei Li	Associate Professor	Mechanical design, Data acquisition and control system
LBNL	Soren Prestemon	Senior Scientist	Project leader of LBNL
LBNL	Torsten Koettig	Staff Engineer	Mechanical design, Data acquisition and control system

Tasks

Lab	Tasks
LBNL	Conceptual design
	Providing cryocooler and instrumentations
SINAP	Design, fabrication, commissioning
	First test on storage ring of SSRF on this summer

Approach

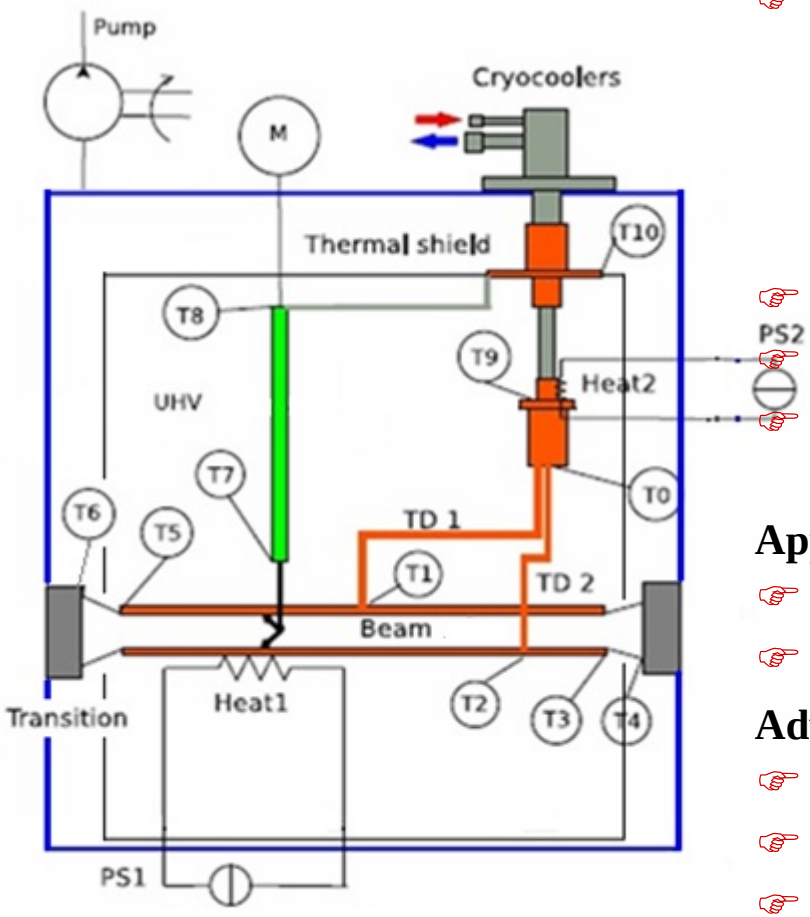

- Cryogen free: 2 pulse tube cryocoolers
  - CRYOMECH PT415 (1.5W@4.2K, 45W@50K)
  - SUMITOMO RP-082B (1.0W@4.2K, 40W@45K)
  - Low vibration, two orders of magnitude smaller than GM;
- Thermal shield works below 50 K
- Beam plates work below15 K
- High resolution temperature sensors and heaters are distributed in this system.

Approach:

- Measure heat loads via temperature gradients
- Temperature control loop on 2nd stage (heater, temp sensor)

Advantages:

- Variable gap size
- Variable surface materials
- Variable operating temperatures

Mechanical structure

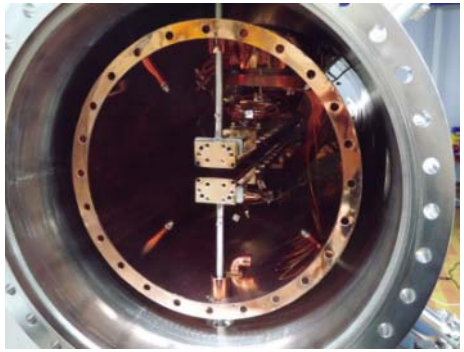

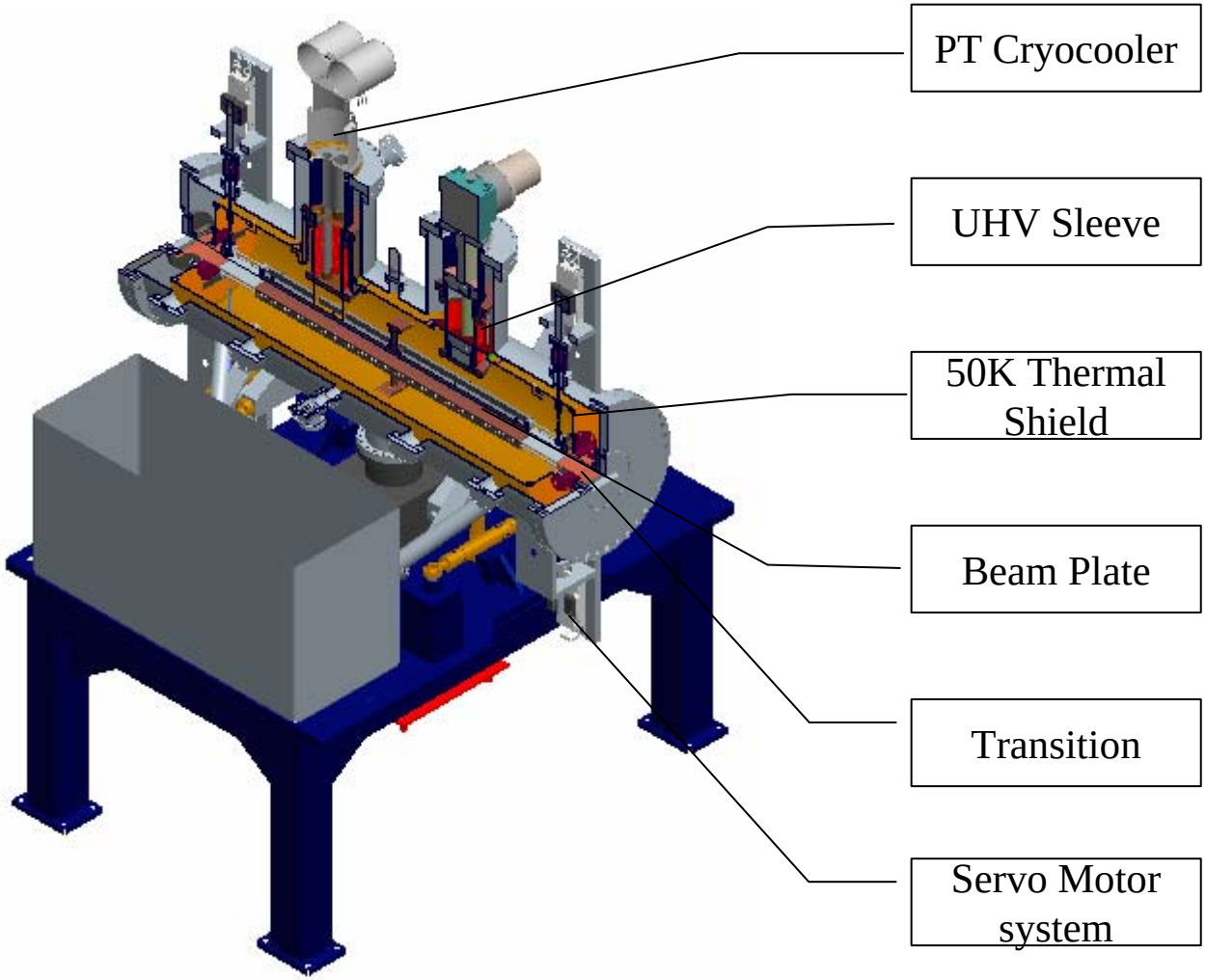

Beam plate

Beam plate

- Dimensions : 1000x50x30 （thickness 10mm）
- Material : Al-6061
  - Good rigidity
  - Good thermal conductivity
- Low resistance coating materials: Cu, Ag, Al, 0.5mm thickness
- 10 Cernox sensors installed

Measurement block

- Measure heat loads via temperature gradients
- High thermal conductivity material: OFC（RRR=60）;
- Area of cross section: 2.07 cm^2;
- 2 Cernox sensors measure ΔT;

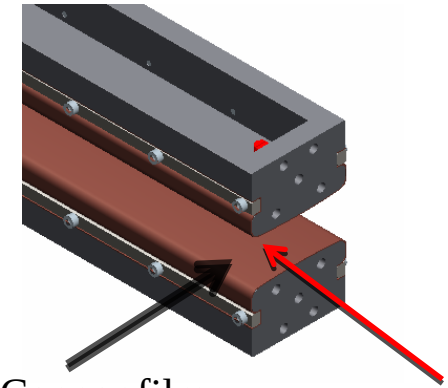

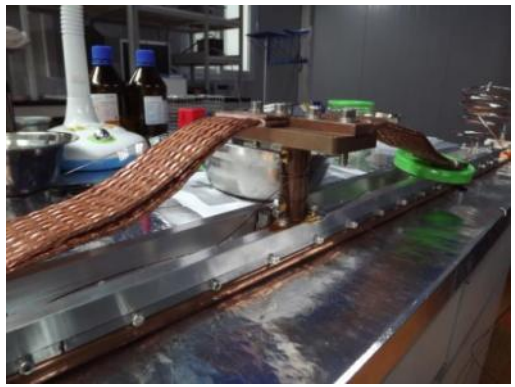

Beam plate assembly

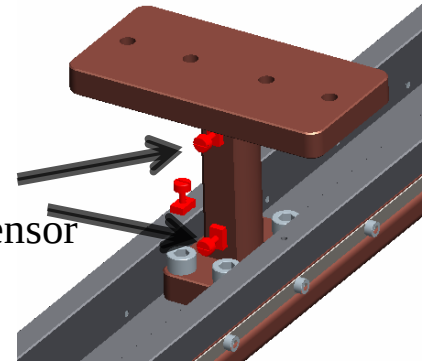

Measurement block

RF shield structure

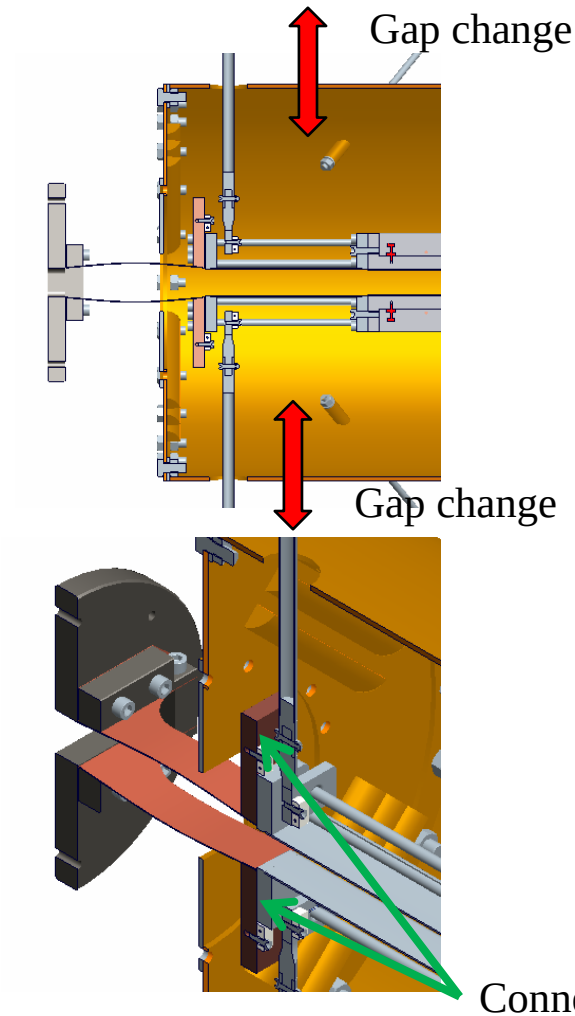

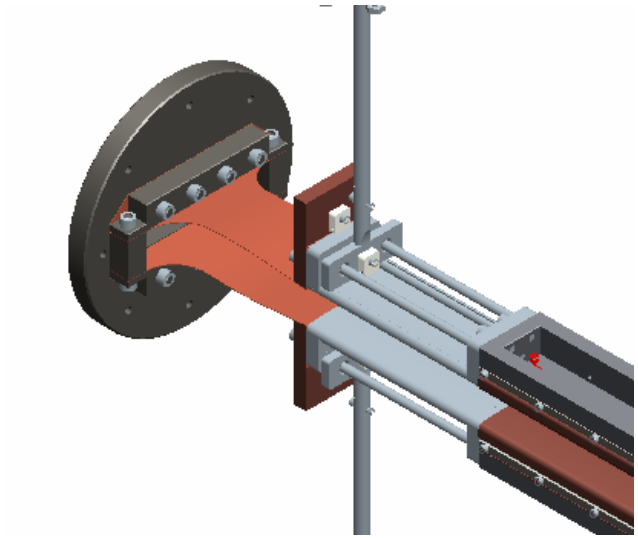

- This structure is applied by IVU of SSRF;
- Material ：Be-Cu ；
- The radius of finger: R=300~350 mm
- Thickness：0.5 mm ；
- Cold end connecting to 50K;
- 300 K →50 K heat load：3×4 W。

Regulating mechanism

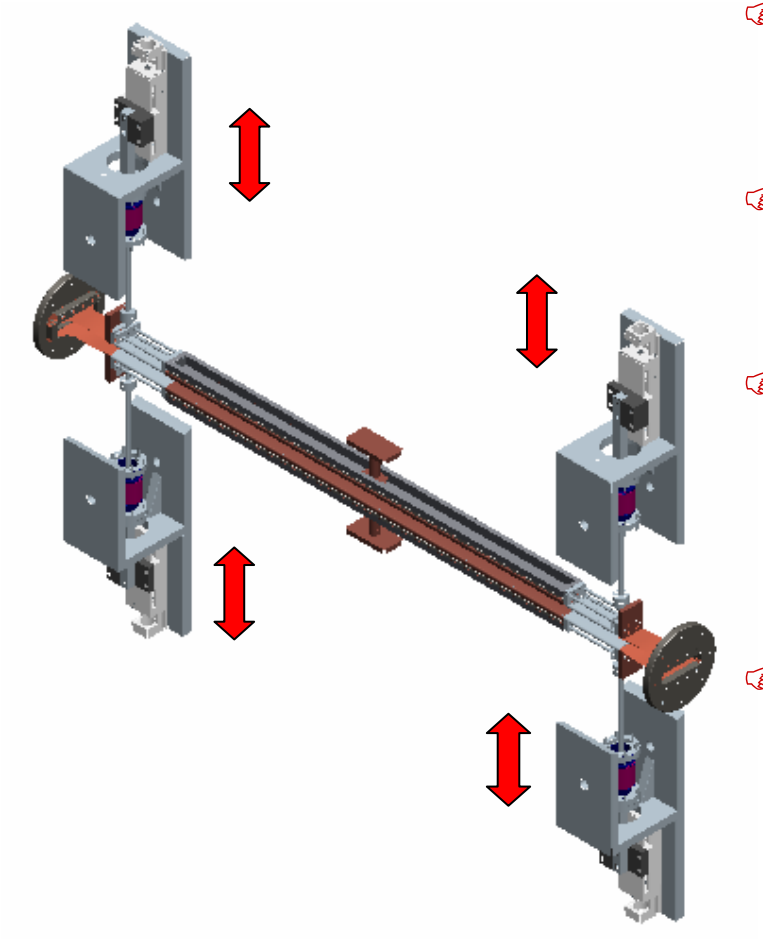

- The gap of beam plates can be regulated (parallel) the range is 0mm~40mm;
- Four sets of YASKAWA serve motor and THK Z-stage system;
- THK Z-stage：

  Resolution: ±0.003mm，

  Range: 0~65mm；
- Estimate of loads：

  1.vacuum pressure of CF35: 9.9 kg;

  2.weight of beam plate: 2.24 kg;

  3.force from the finger of RF shield structure;

Thermal shield

- Dimensions：ø340x3x1460
- Material：OFC
- Treatment：mechanical polish
- 4 PT100 sensors and 2 heaters

Thermal shield support:

- Dimensions：ø6x1x370
- Material ：316L
- Heat load：0.084 x8W

UHV vacuum chamber

- Dimensions: 1550xø400x5;
- Material：316L;
- ion pump：400 L/S;
- NEG pump: 400 L/S *2;

Main ports list

Item	Details	Qty
Cryocooler	CF250	2
Ion pump	CF150	1
Chamber flange	DN400，Silver seal	2
Vertical support rod	CF35	4
Thermal shield support	CF50	8
Feedthrough	CF63	2
Rough pumping port	CF35	1
Vacuum gauge	CF35	1
NEG pump	CF63	2

UHV Sleeve

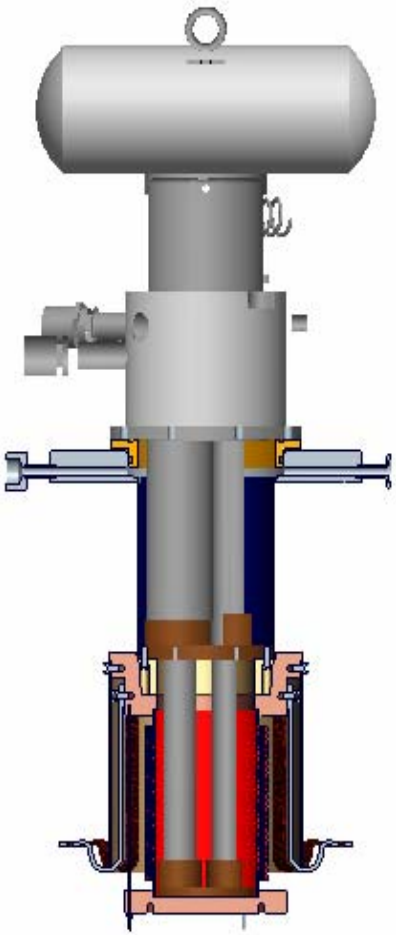

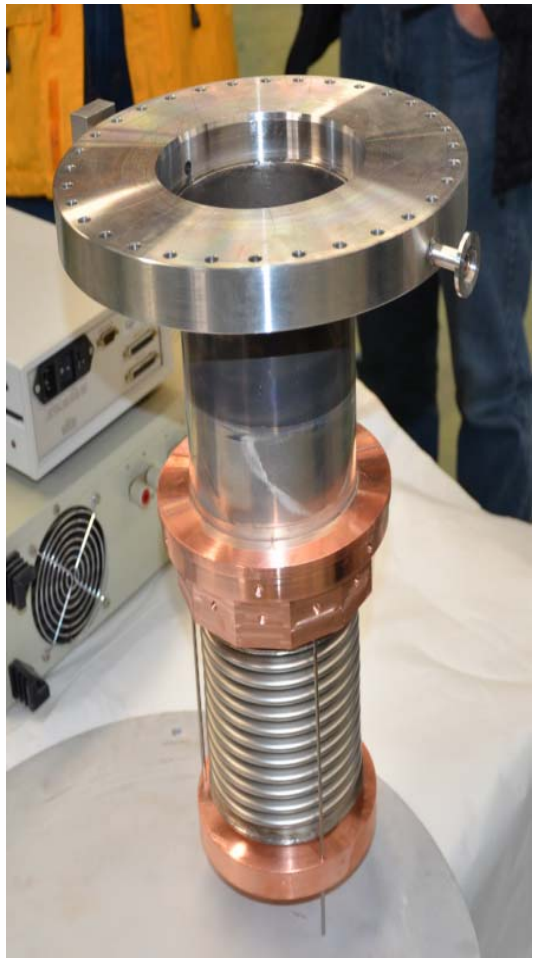

Functions:

- ☞ separates HV and UHV;
- ☞ bakeout without cryocooler;
- ☞ maintenance of cryocooler;

Shortcoming:

- ☞ Bellow provides contact force on heat exchange surface; maximum of 2nd stage cold head is 5 kg; Cause temperature difference
- ☞ Loss of cooling power:

  Q1=1.6W（4%）, Q2=0.035W（2.3%）;

Data acquisition and control system

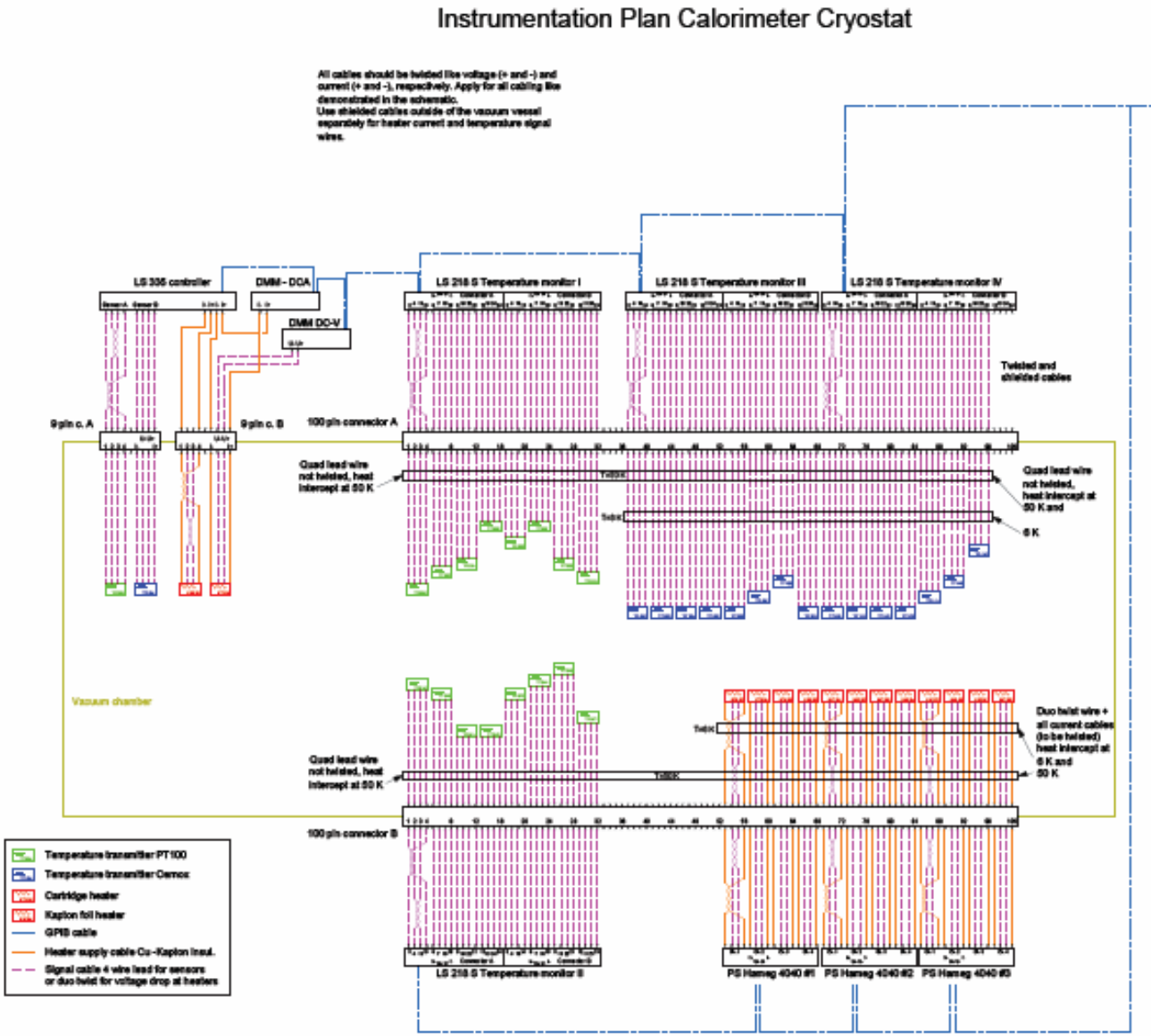

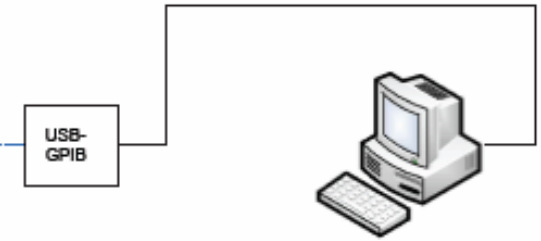

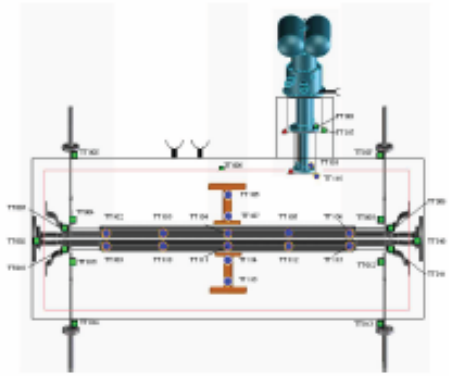

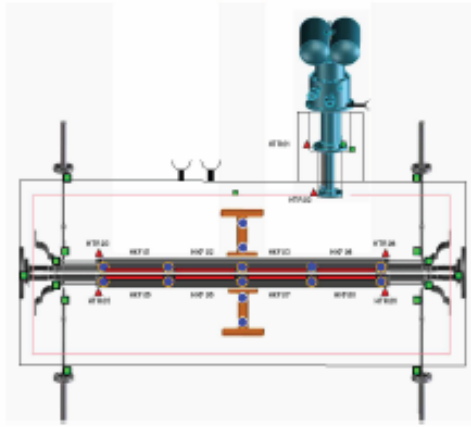

Sensors and Instruments

Sensors

Item	Qty	Manufacture	Model
PT100 Temp sensor	18	Lakeshore	PT-103-AM
Cryogenic sensor	16	Lakeshore	Cernox HT
Heater	8	Lakeshore	HTR-50
Film heater	8	Minco	HK5393R32.2L12A
Vacuum sensor	1	Varian	UHV-24 Ion gauge

Instruments

Item	Qty	Model	Application
Temperature monitor	2	Lakeshore，218S	PT-103-AM
Temperature monitor	2	Lakeshore，218S	Cernox HT
Temperature controller	1	Lakeshore,325	HTR-50,PT100，Cernox
Multi-meter	2	Keithley multi-meter 2000	HTR-50
High resolution PS	2		
Vacuum controller	1	Varian，XGS600H2M0C0	

Distribution of temperature sensors and heaters

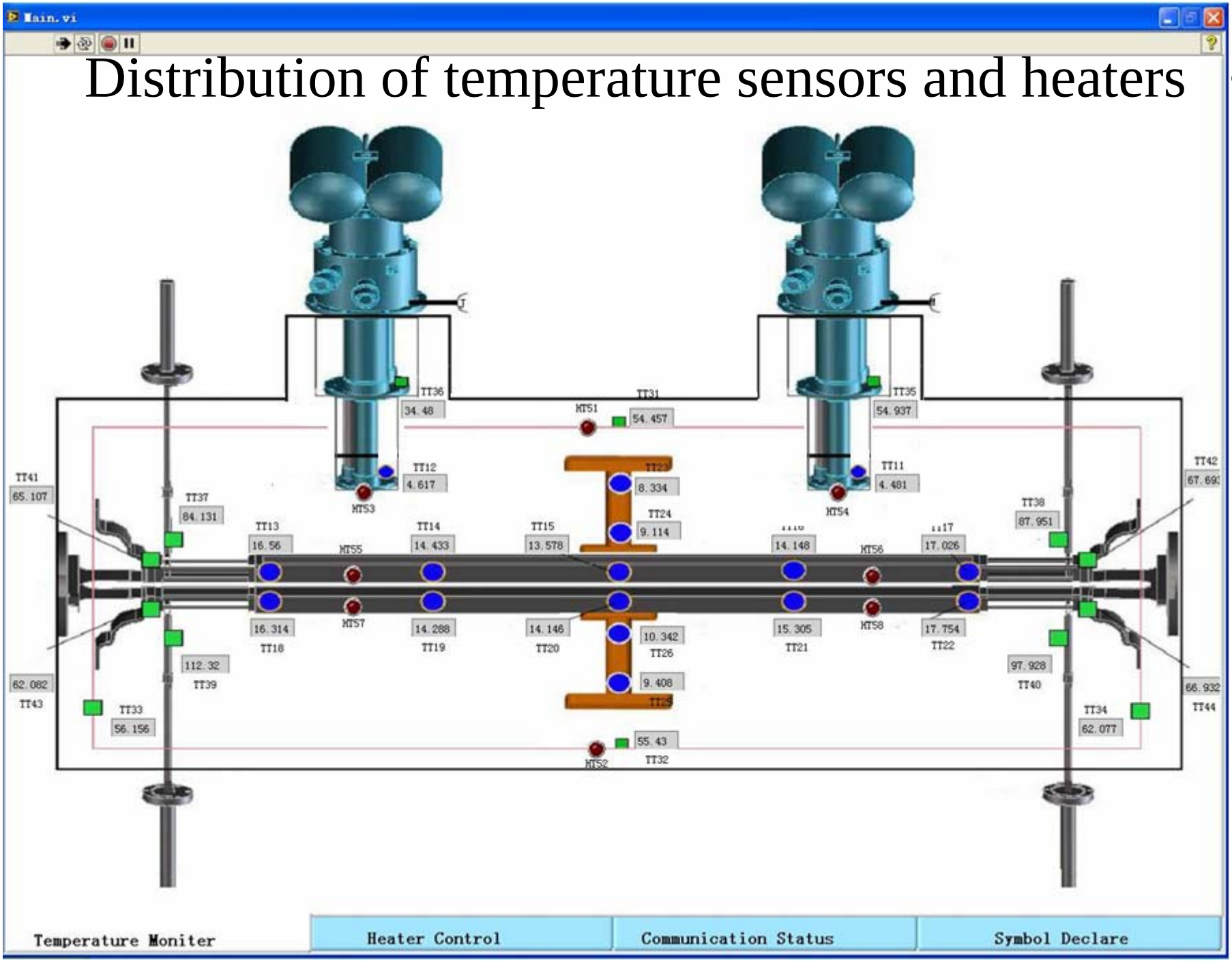

Control system of servo motor

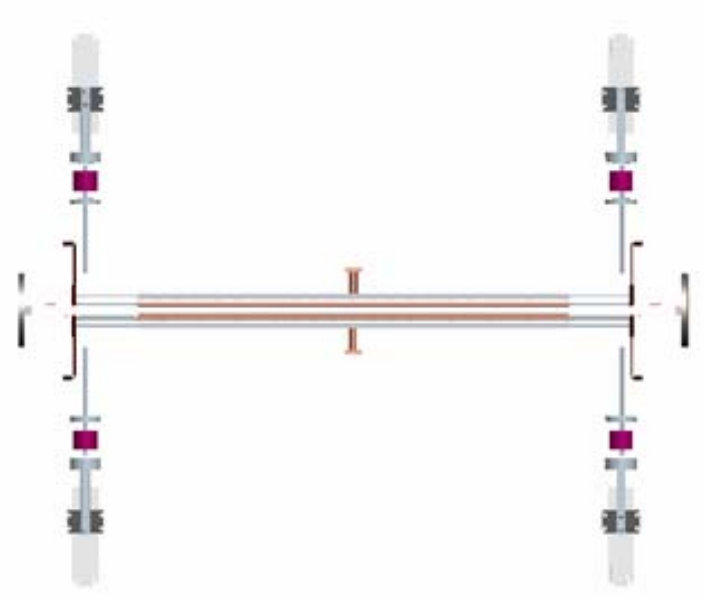

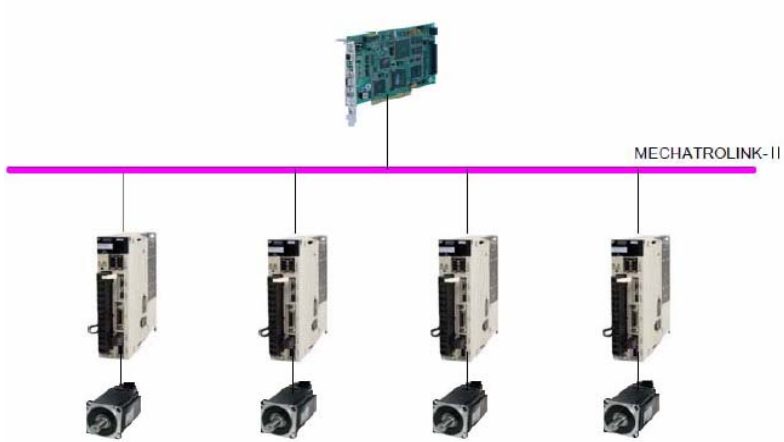

Item	Qty	Manufacture	Comments
Z-stage	4	THK, KR3306A	Range: 65mm
Serve motor	4	YASKAWA	
Driver	4	YASKAWA	
Controller	1	YASKAWA	

Main milestones

- April-August, 2010 — Conceptual Design
- August, 2010-June, 2011 — Engineering Design
- July, 2011 — Final Design Review
- August, 2011-April, 2012 — Contract, Fabrication
- May-July, 2012 — Assembly, Offline Commissioning
- August, 2012 — Installation on SR of SSRF
- September, 2012 — Online Commissioning and Measurement

Commissioning and first online test

Vacuum commissioning

- Bakeout: 7 days, 120 ℃
- Final vacuum pressure@ room temperature: 1.3×10^{-9} Torr

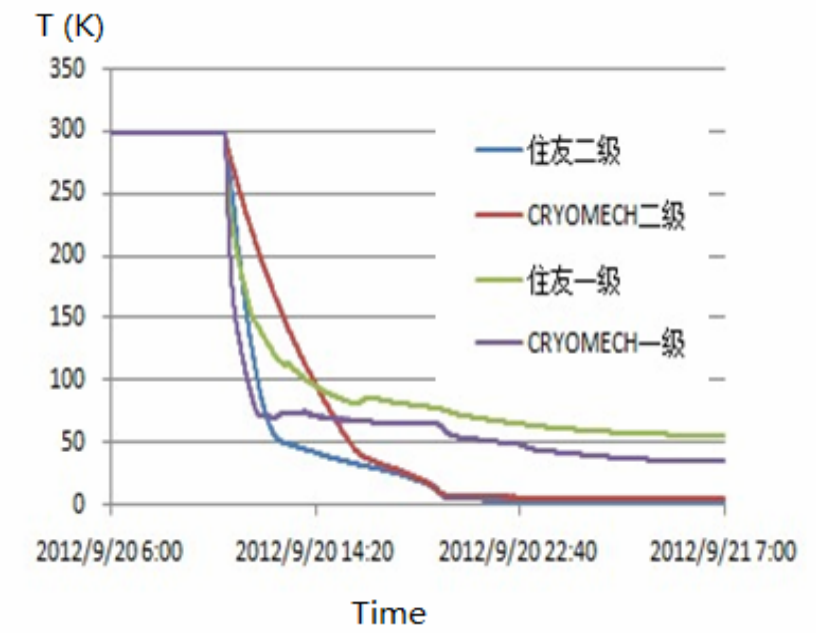

Cryogenic test (without beam)

- Cooling down time: 24 hours
- PT415: 1st stage 54.9K
  2nd stage 4.4K
- RP-082B: 1st stage 34.5K
  2nd stage 4.6K

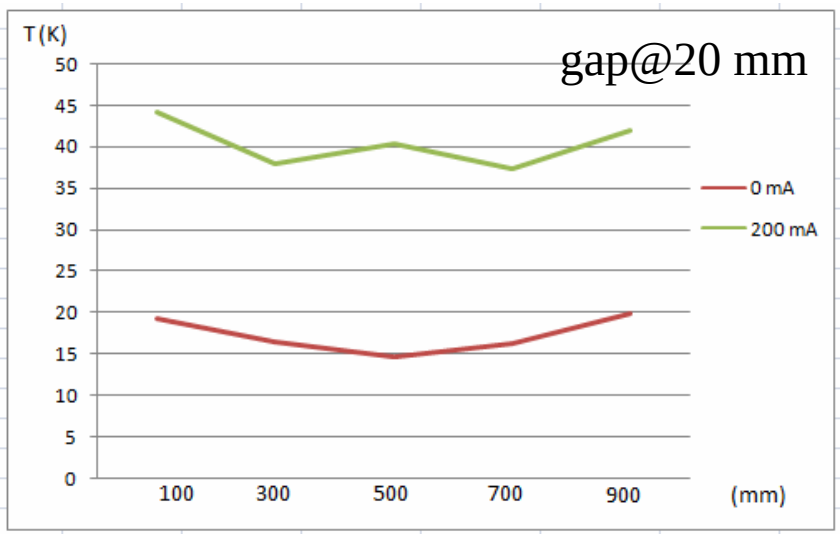

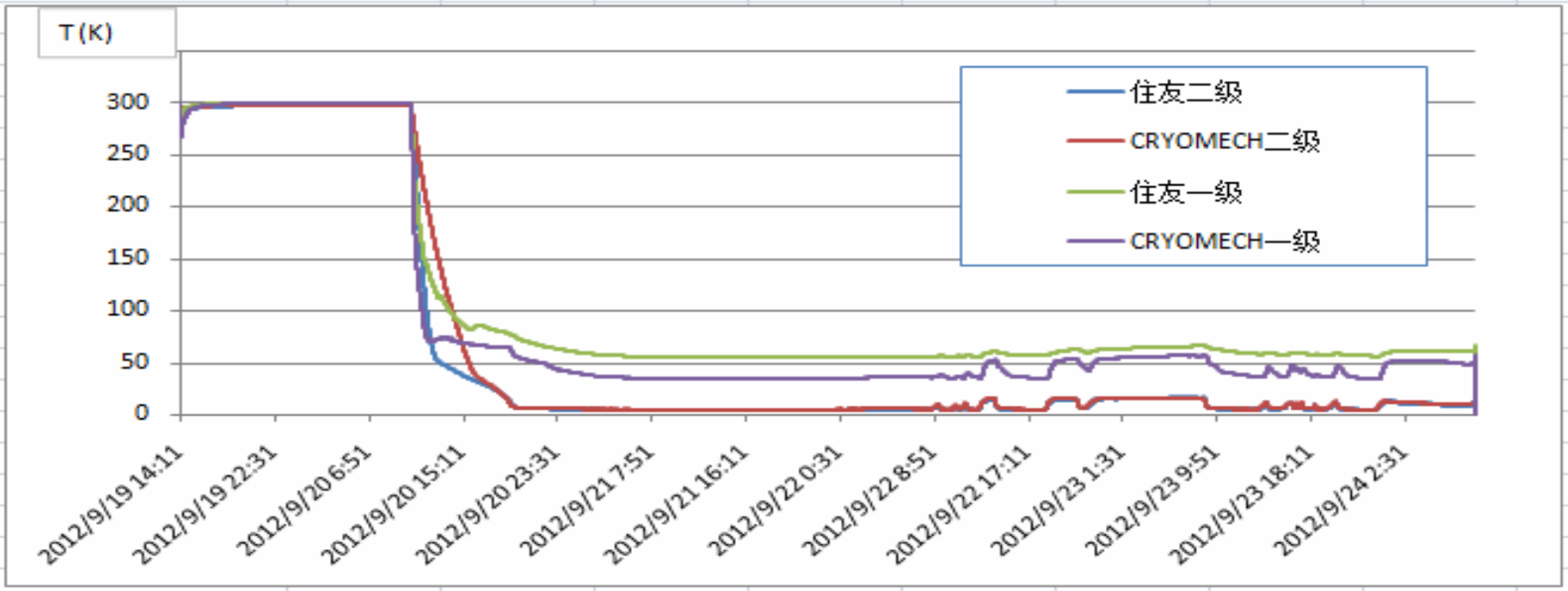

SSRF Operation Status

Main parameters

Current: 167.96mA

Energy:	3.5GeV
Emittance:	-2.9nm-rad
Beam life time:	3.59hours
IntgCurrent:	3883.80AH
AveragePre:	2.60e-09Torr
Tune(x/y):	22.222/11.303
Hor.beamsize:	0.0um
Ver.beamsize:	0.0um
Coupling:	0.60%
Orbit(rms)x/y:	240.99/109.10um

operator: Guangwei Jiao& Xiaohong Han shift plan:Machine study light: Not Available

Summary

- With 2 pulse tube cryocoolers, beam plates and thermal shield can reach expected temperature;
- Appropriate UHV commissioning process and low outgassing materials are employed to reach UHV pressure requirement of SR;
- The experimental result shows temperature rising of beam plates could be as high as 25 K@200 mA (top-up mode);
- Further measurement and analysis will be completed in the following several months.

Thank you!