Wir schaffen Wissen – heute für morgen

Paul Scherrer Institut

Urs Ellenberger

Development and fabrication of undulator U15 for SwissFEL

on behalf of department of Mechanical Enginering and of group of insertion devices

Outline

- Overview
- Goals and specific requirements of undulator U15
- Key components of design
- Summary

Outline

- Overview
- Goals and specific requirements of undulator U15
- Key components of design
- Summary

Overview of main activities of PSI with its large research facilities

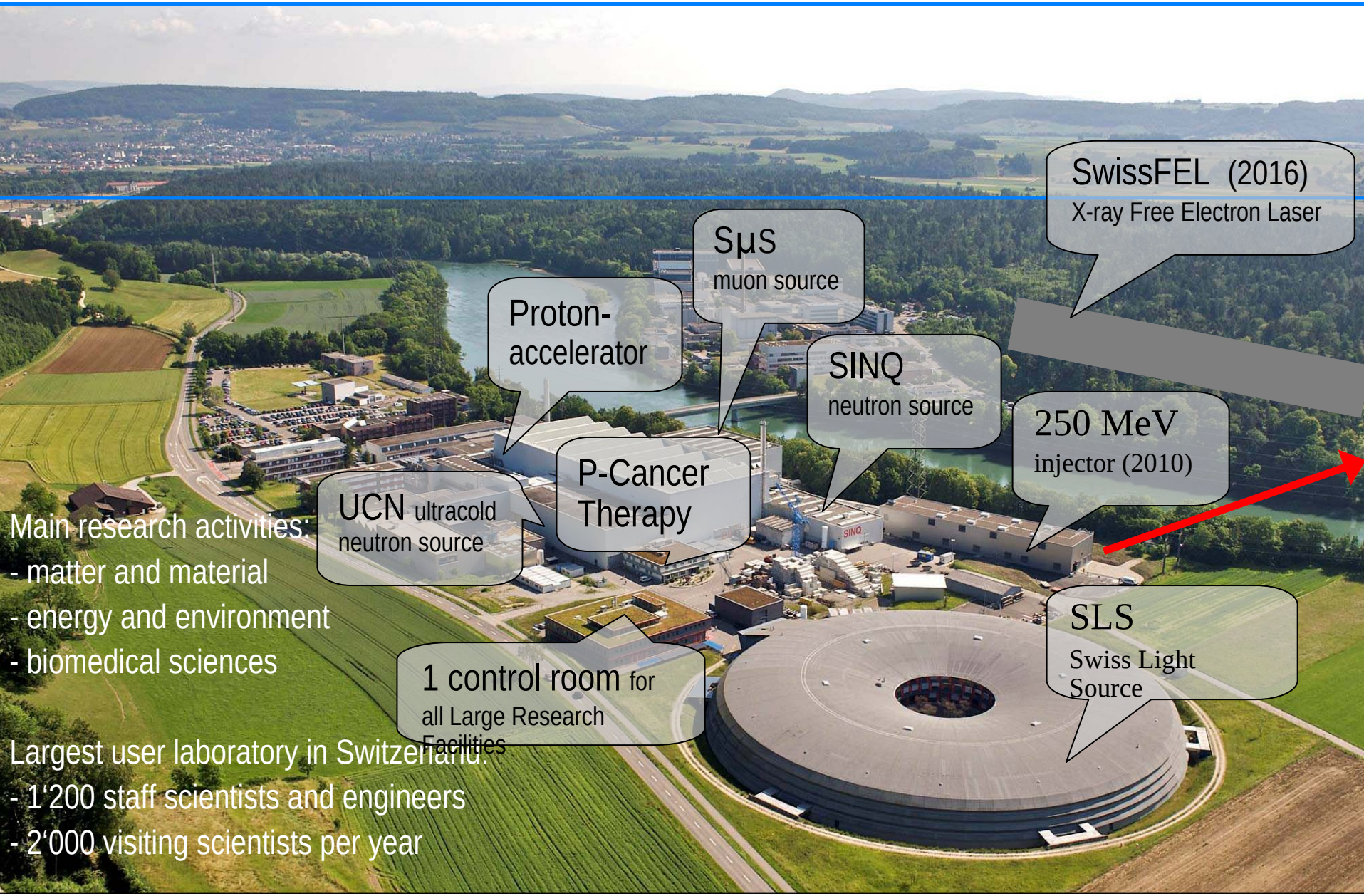

Main research activities:
- matter and material
- energy and environment
- biomedical sciences

Largest user laboratory in Switzerland:
- 1‘200 staff scientists and engineers
- 2‘000 visiting scientists per year

General specifications of SwissFEL undulator lines

- Undulator line for hard X-rays from 7 Å (1.8 keV) to 1 Å (12.4 keV) with electron energies of 5.8 GeV is called Aramis
- Another undulator line for soft X-rays from 60 Å (200 eV) to 6 Å (2keV) is called Athos
- Aramis line will have 12 in-vacuum undulators with a short period of 15 mm (U15)
- Industrial based small series production for a large number of similar undulators for SwissFEL:
  - ➔ Aramis (2016): Undulator U15, short period of 15 mm, planar design, in-vacuum
  - ➔ Athos (2020): Undulator UE40, period of 40 mm, Apple design for variable polarization, in-air (ex-vacuum)
- Same frame and gap drive system for both undulators to profit best from series production.
- In addition same 5-axis CAM shaft movers, same street transport design (with air cushions) and same materials to purchase (except for vacuum chambers and magnets).

SwissFEL Layout (based on FEL-RV84-019-**07**)

Aramis Undulator Line

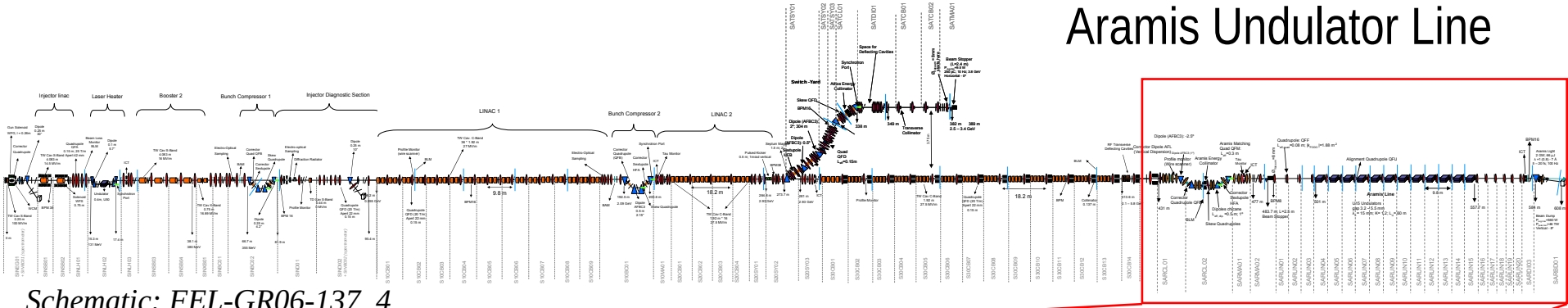

Schematic: FEL-GR06-137_4

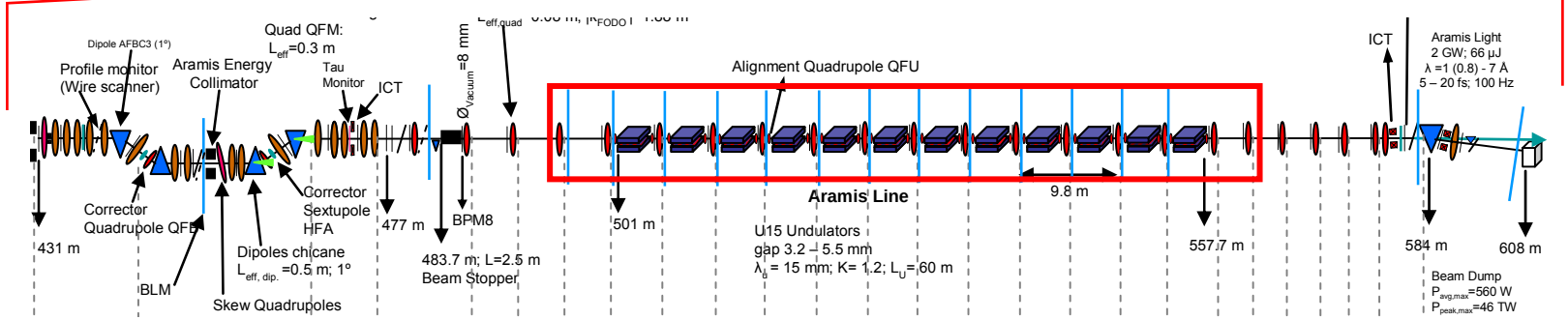

- Undulator length = 4m, inter-undulator-section = 0.75 m (was 0.9 m)
- Up to 20 undulators U15 can be installed in Aramis beamline
- Normal SASE operation with 12 undulators U15 (to be shown in 2016)

Courtesy of Romain Ganter

Outline

- Overview
- Goals and specific requirements of undulator U15
- Key components of design
- Summary

Basic design ideas of SwissFEL undulators

- High stiffness of a rigid frame to achieve hard X-rays down to 1 Å (up to 12.4 keV)
- Cost reduction and optimised design to allow industrial series production
- Modular undulator concept with closed O-shaped structures (closed frames)
- Use of cast and extruded materials is best for low-cost series production
- Precise gap drive system with high stability and drive system on board
- Remote controlled alignment

Basic design idea and concept of SwissFEL undulators

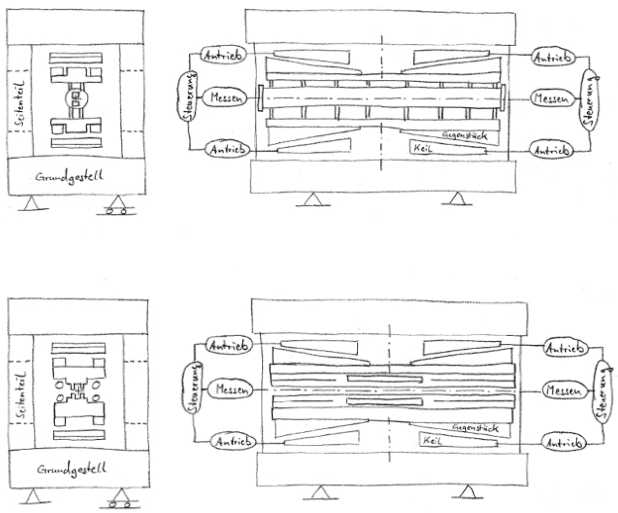

2008: First design idea for U15 and UE40 undulators

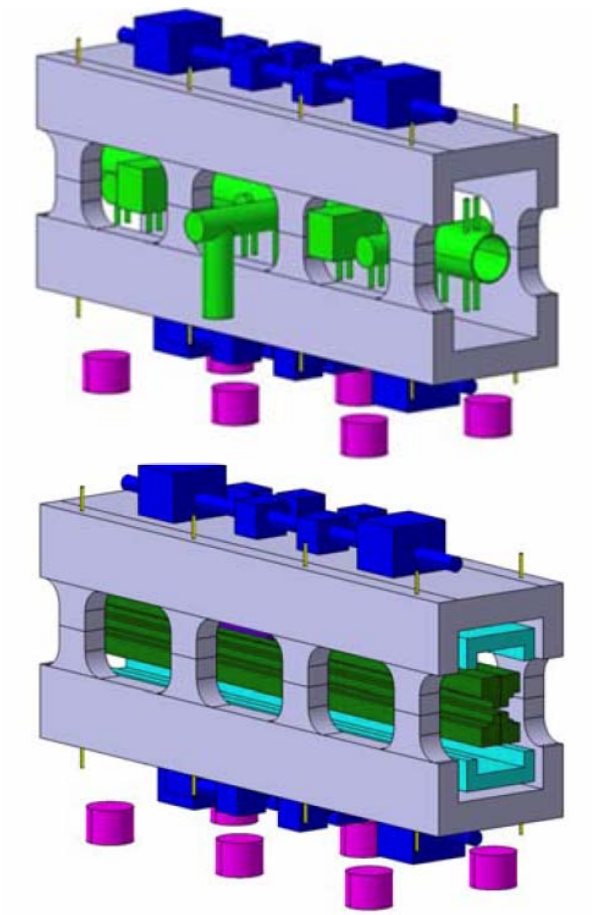

2009: Design concept for U15

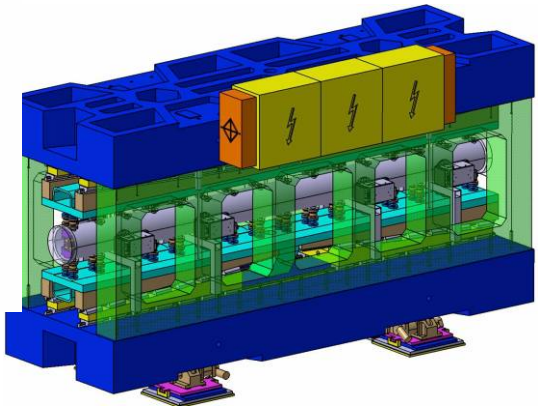

2010: Basic Design concept for U15 is ready

Design of O-shaped frame of mineral cast

Base and side-frames made of cast mineral (Epucret):
- Good inner damping characeristics
- Non-magnetic
- Cost-efficient in series production (vs. granite, cast iron)
- Versatile for a defined tubing in a base plate (U15, UE40)

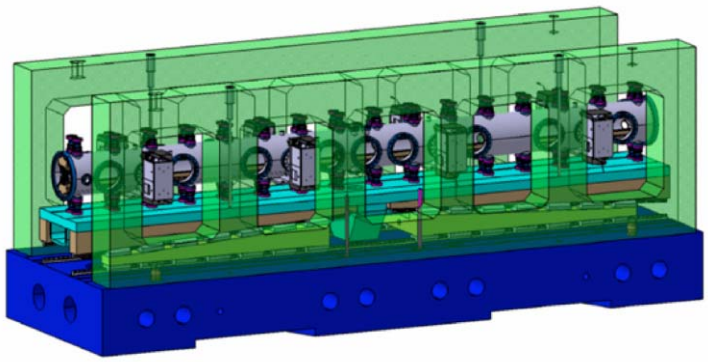

Gap-drive system use servo motors and Beckhoff controls:
- One drive system per wedge pair
- All four drives have to be synchronized
- Outer I-beam is made from extruded aluminum (Alcan), slides vertically and prevents side motions of wedges.

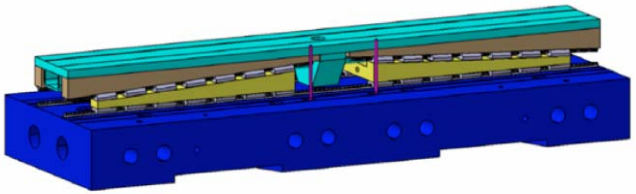

Wedges are mounted in pairs on rails (Hydrel).

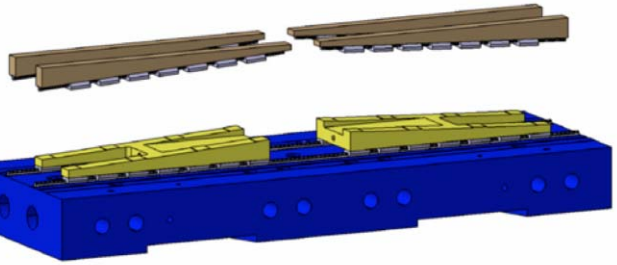

Base frame contains tubes for cabling (depends on undulator).

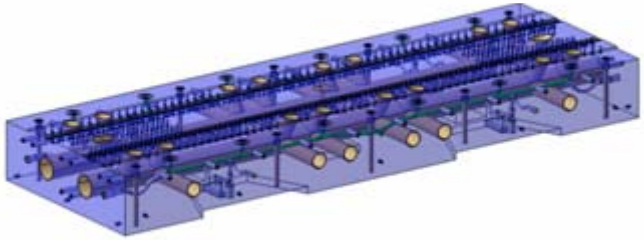

Specification of undulator U15 of Aramis beamline

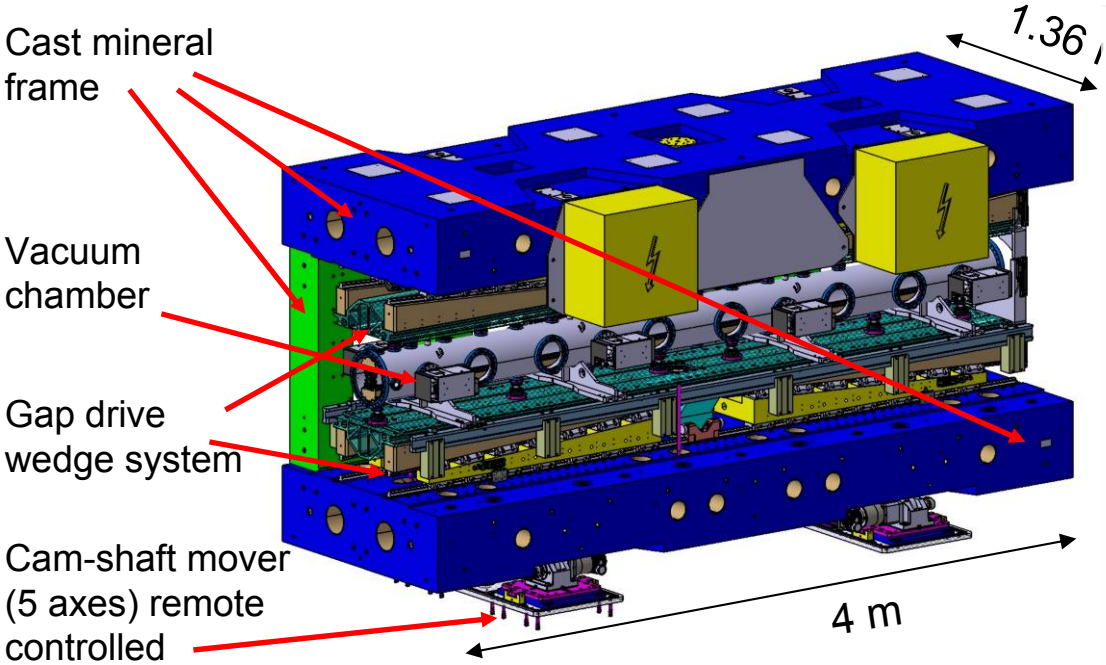

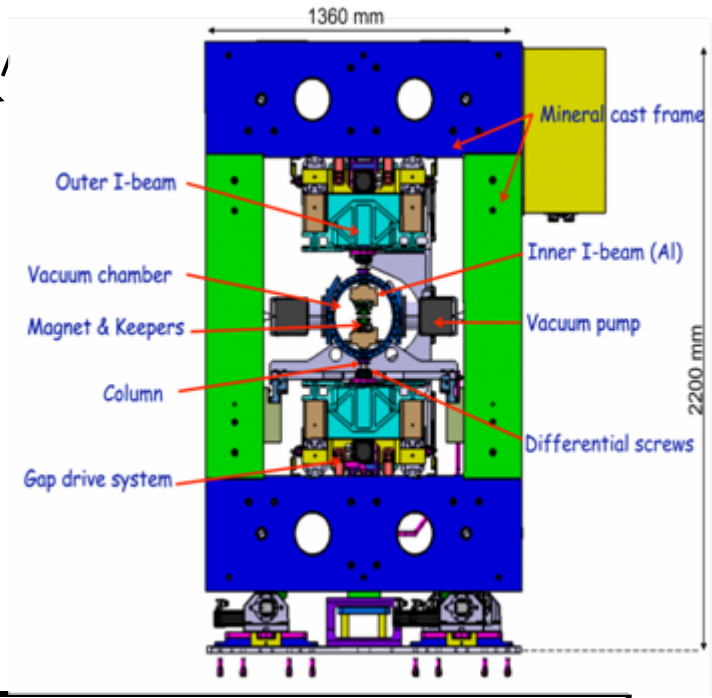

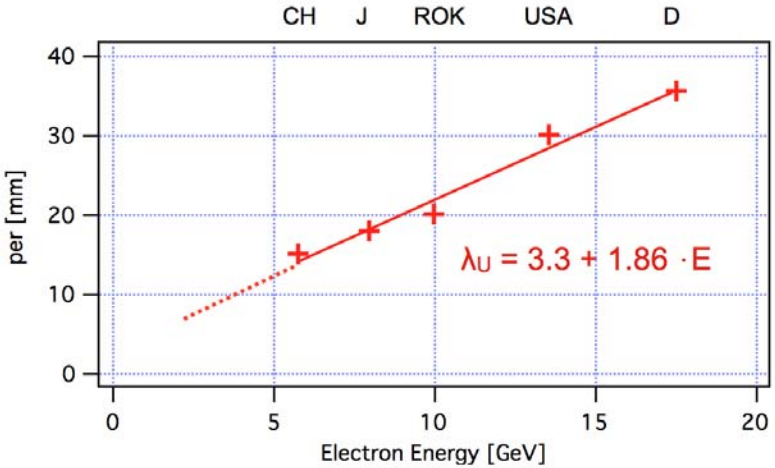

Courtesy of insertion device group

Aramis Undulator Hybrid – In vacuum	
Undulator length	3990 mm
period	15 mm
Number of undulators	12
Number of period segments	266
Nominal K value	1.8 – 1.0
Nominal gap range (20 mm for open gap)	3.2 – 5.5 mm
Pole magnetic field Bz on axis	1.27 – 0.7 T

Outline

- Overview
- Goals and specific requirements of undulator U15
- Key components of design
  - Gap drive system (precision, accuracy)
  - Outer I-beams (flatness)
  - Block keepers of inner I-beams to hold the magnets
  - Automated system for magnet adjustments (ex-vacuum, in-vacuum)
  - First test results with a micro-undulator
- Summary

Gap variation versus Heidenhain encoder settings

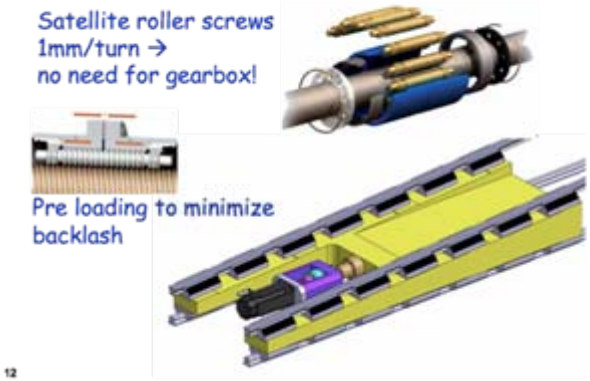

Gap-drive system use satellite roller screws from Rollvis (CH) to adjust wedges:

- A full stroke (360°) corresponds to 1 mm
- Verical movement is further reduced by 1:10 through proper wedge dimensions (gearless)
- Minimized backslash (0.3 µm)

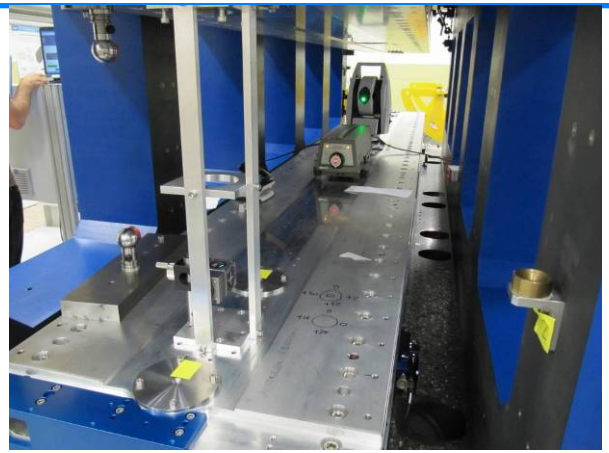

Setup with laser interferometer (0.1 µm accurate) for gap distance measurements

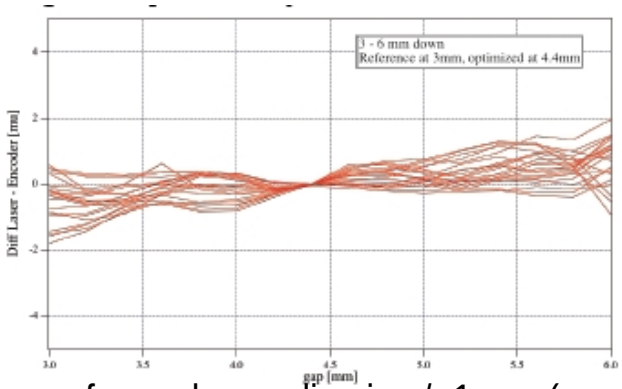

Accuracy of encoder reading is +/- 1 µm (corresponds to +/- 0.1 µm) for gap settings from 3.5 to 6.0 mm.

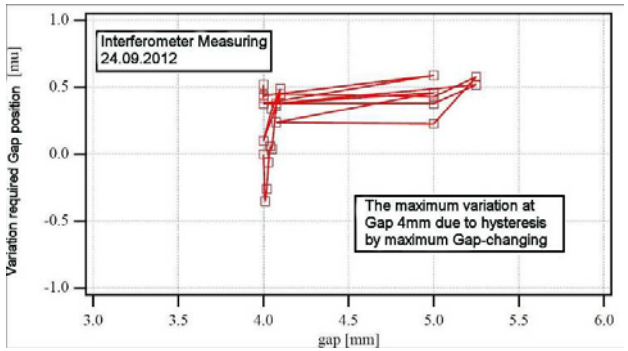

Repeatability of a gap settings is +/- 0.5 µm or less depending on the amount of gap change (hysteresis).

Flatness of and parallelism between outer i-beams

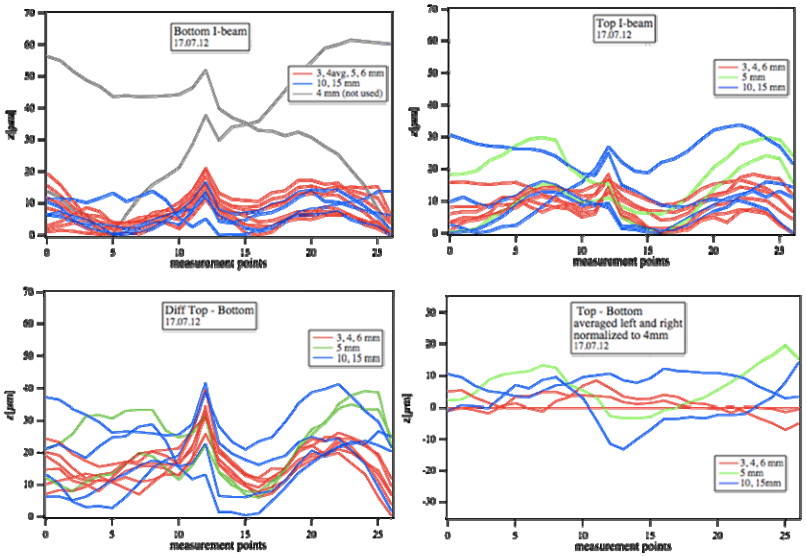

Measure of traces on precise machined surface (< 10 µm @ 4m) of I-beams (top and bottom part of frame) with an indicating caliper (1.0 µm accurate)

Differences of corresponding traces (bottom, left) of top and bottom I-beams (first line) do vary in a band of 35 µm (bottom, right) after normalization.

After assembly of top frame (before glueing) Measuring of parallelism between upper and lower I-beam on 2 traces (3mm apart):

- With laser tracker (10 µm) and with inclinometer (1.0 µm) for comparison.
- Both traces vary in a range of 50 µm.

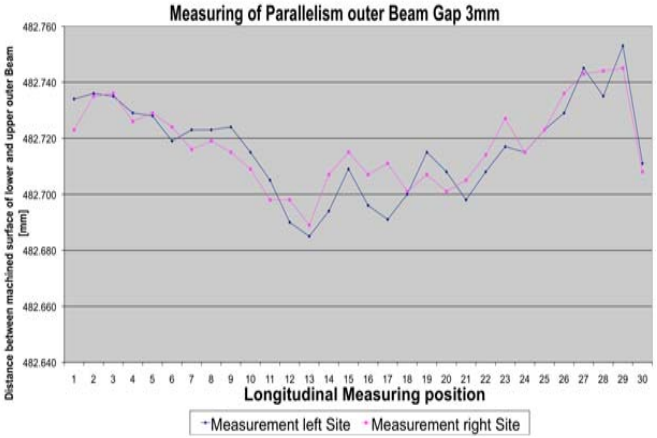

Simulation of gap dependent magnetic field-distortions due to columns

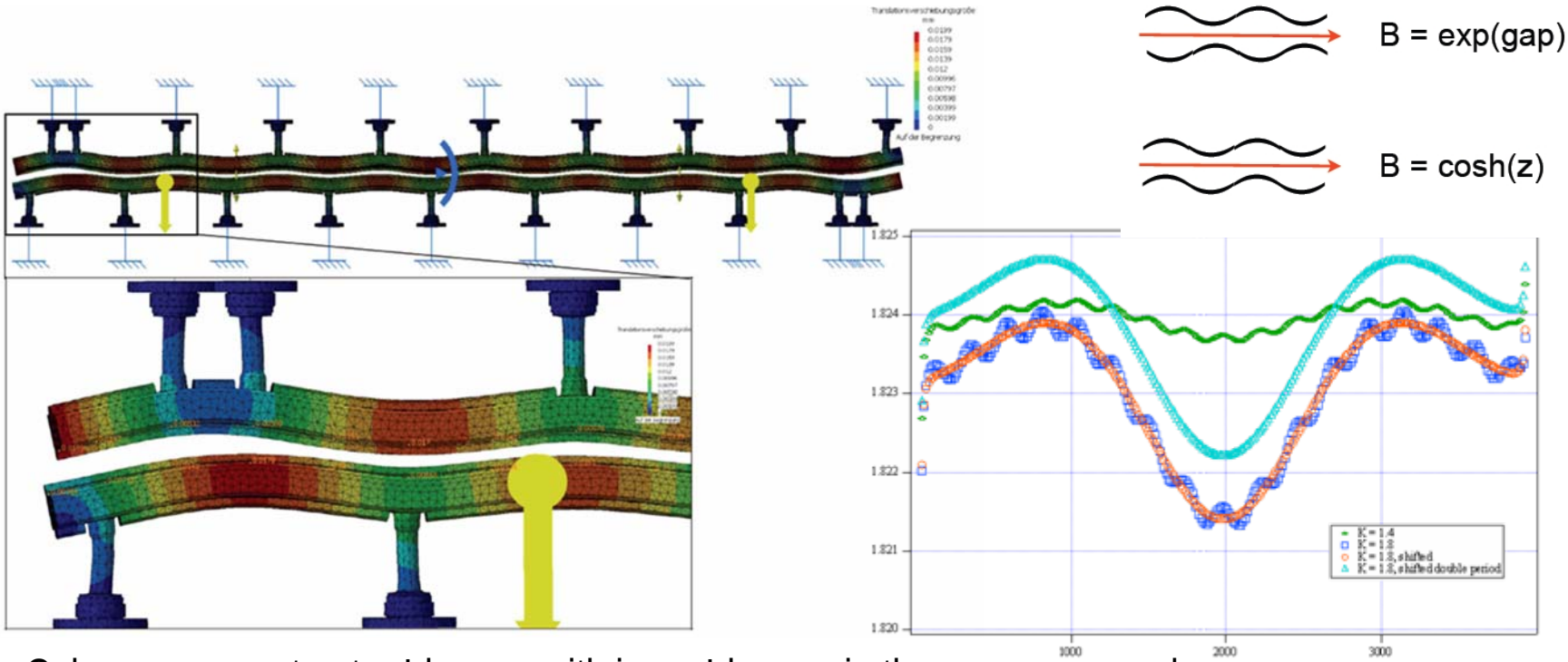

- Columns connect outer I-beams with inner I-beams in the vacuum vessel
- Number of columns are reduced to save costs (64 to 32, to 20 columns)
- Rearrangement of columns in a shifted way leads to roughly constant gap following a wave
- Simulations show a gap variation which is constant within 1 μm (constant B-field)
- B-field distorsions is expected to be less severe if gap varies with a cosh(z) than with exp(z)
- Less costs for columns and welding, less risk and less assembly work

Magnet, poles and block-keeper units

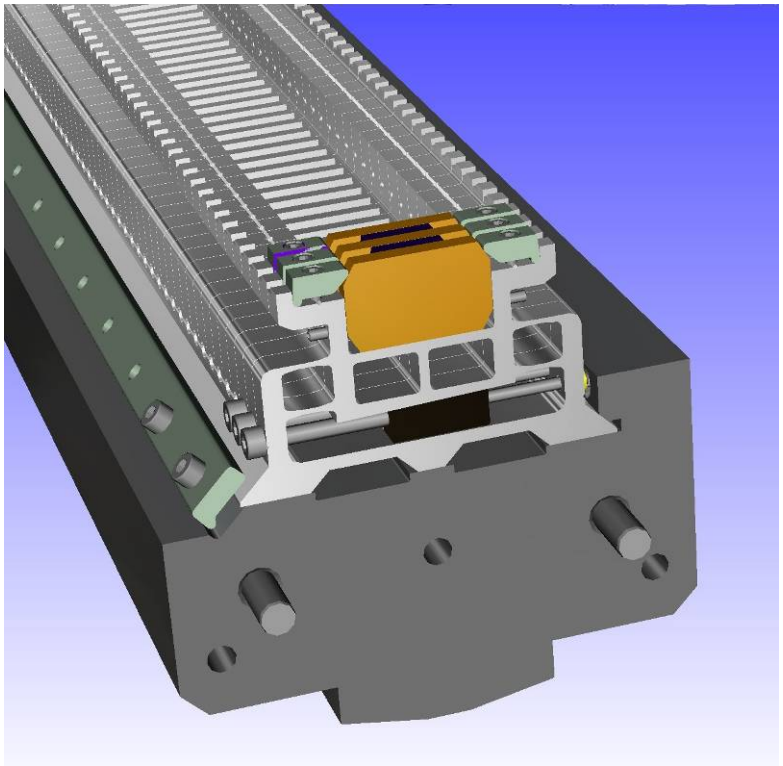

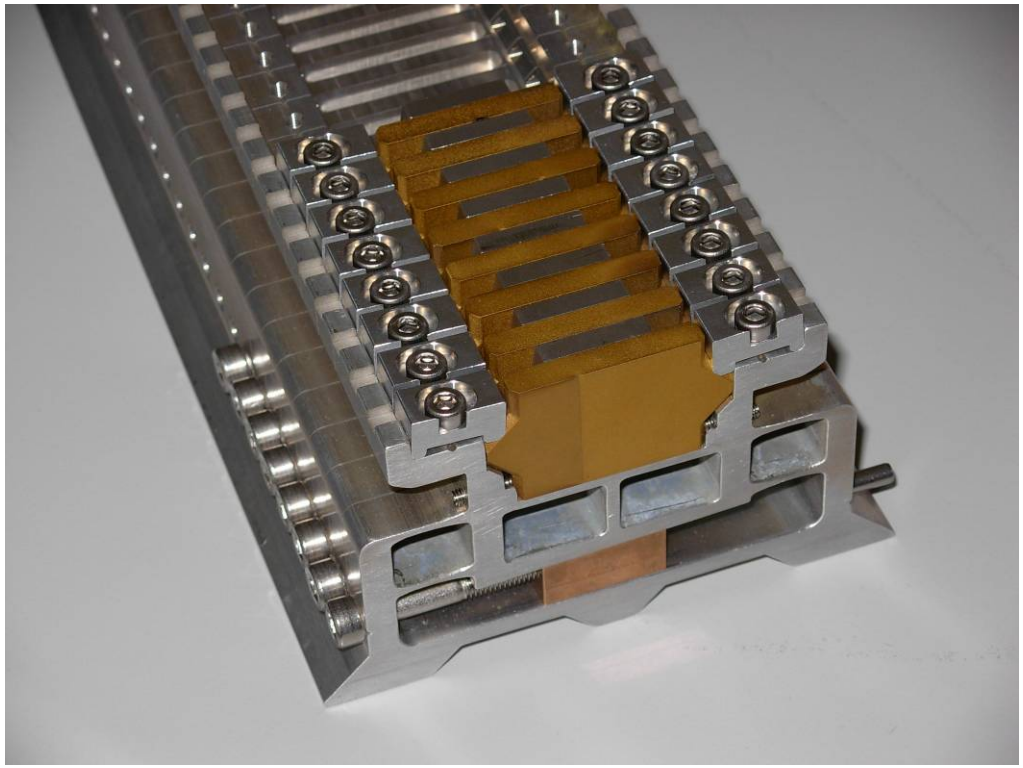

- Block-keeper made from extruded aluminum for 22 periods of magnets mounted on inner I-beam (reduced manufacturing besides wire-cutting EDM)
- Wedge-based height adjustment (flexor or weak-link mechanism) of max. +/- 20 µm with one screw.
- Automated by robot that drives each screw to correct for B-field deviation after hall-probe measurements

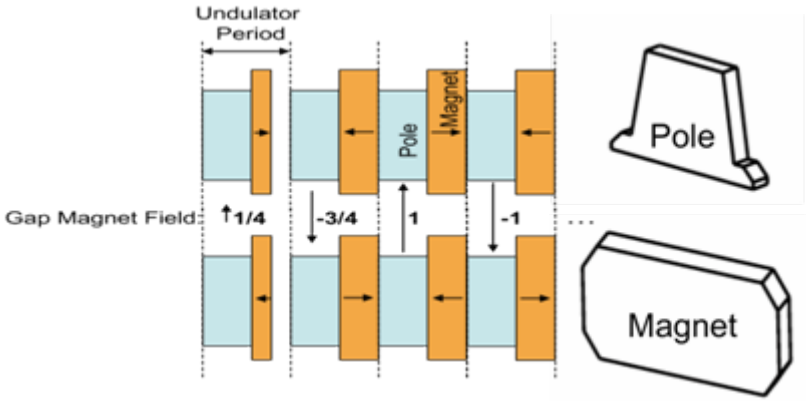

Microundulator: Setup for B-field measurements (1/3)

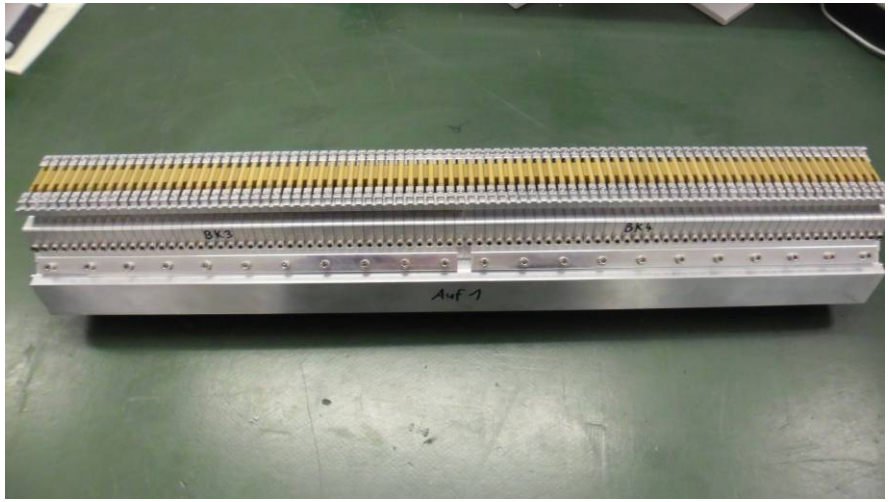

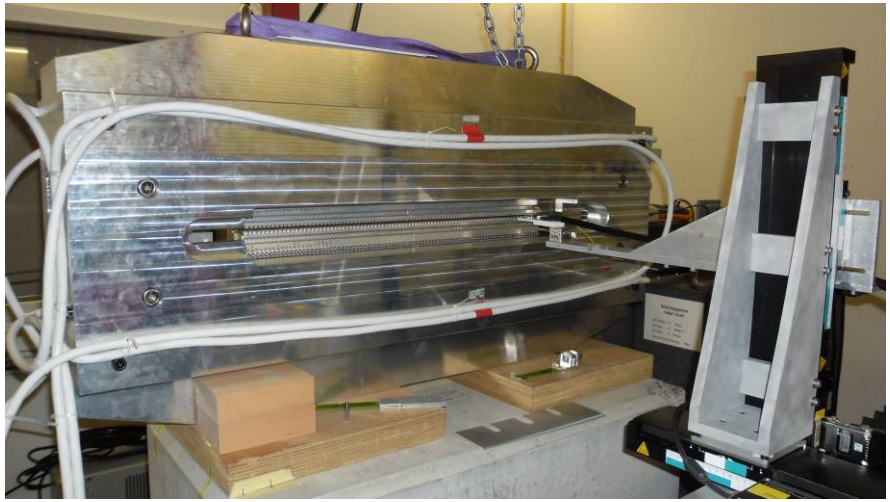

- Magnets are NdFeB-Dy, 4.1 mm thick, Cu-Ni coated, remanence Br = 1.25 T, coercitivity Hc > 2‘400 kA/m.
- Pole material is Permendur (CoFeV)
- 2x block-keepers are mounted on one I-beam (66 cm long) to form 44 magnetic periods (period of 15 mm).
- Two I-beams are mounted in a rigid microundulator to serve as a test device for in-air measurements.
- B-field variations are measured thorugh a hall-probe driven by a servo motor on a probe bench. Gap adjustements are calculated and performed by hand.

Planned integrated Hall-probe measurement (2/3)

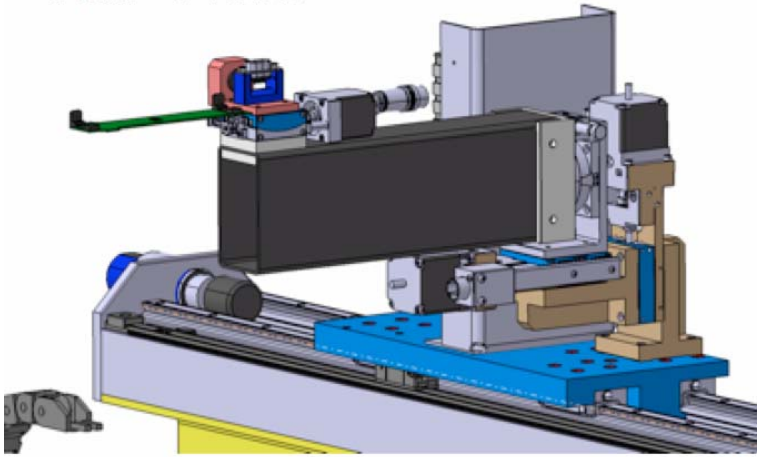

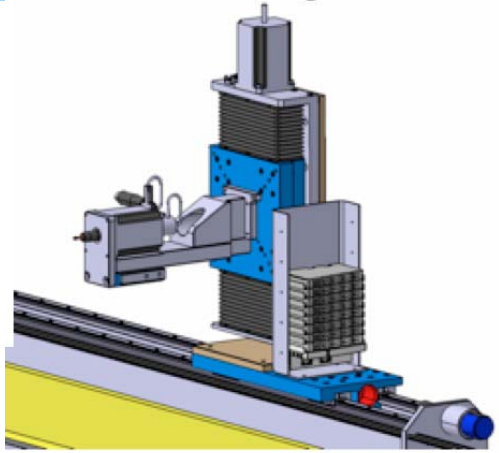

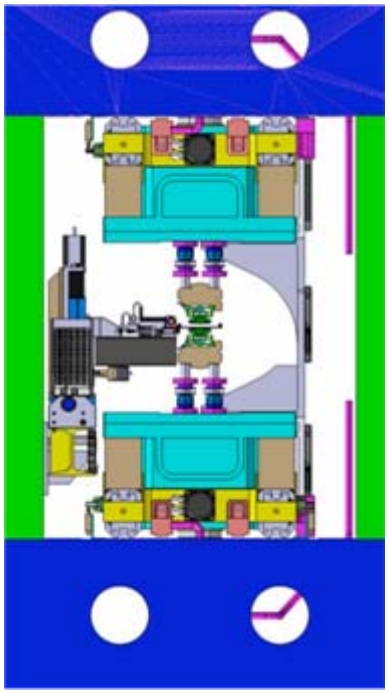

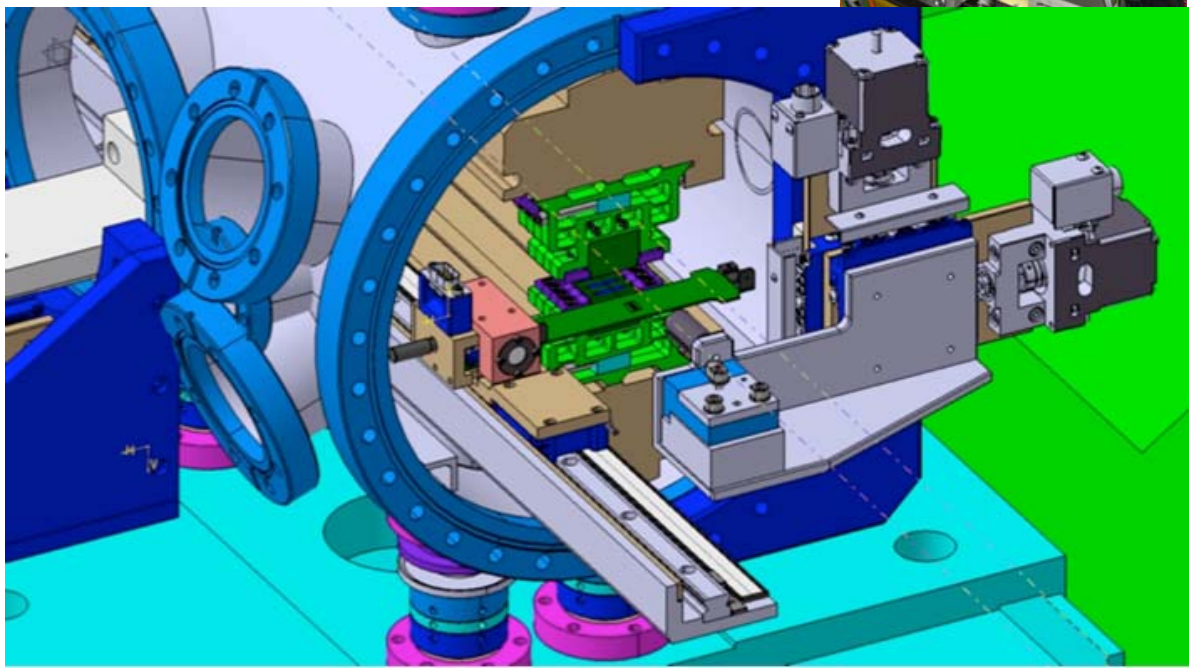

Hall probe and automated robot with screw-driver for in-air (UE40, Apple) as well as in-vacuum (U-15) measurements.

B-field measurements and calculation of e-trajectories (3/3)

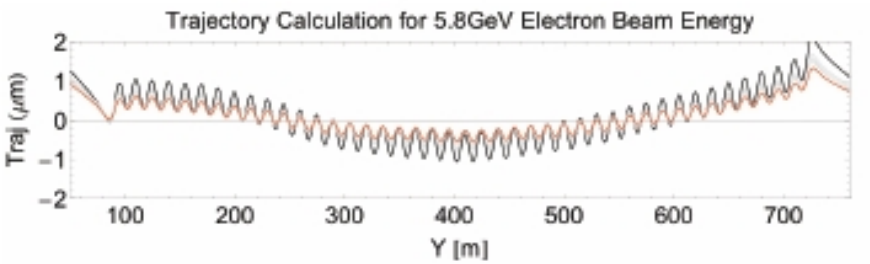

-Measure magnetic field B along the microundulator (y) with the hall probe bench.

- Measure the field integrals of B with the moving wire along the microundulator (y) in x- and z-direction
- Calculate trajectories and phase in (x,y) and (y,z).

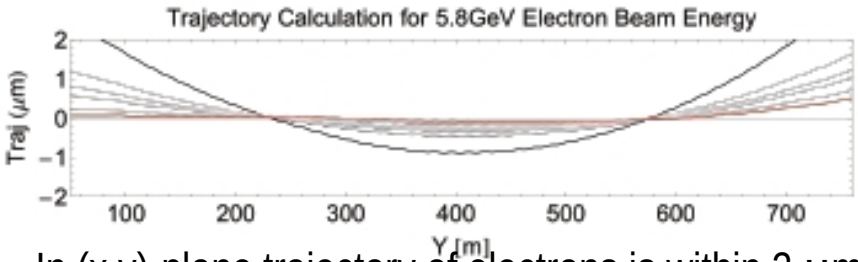

In (x,y)-plane trajectory of electrons is within 2 μm.

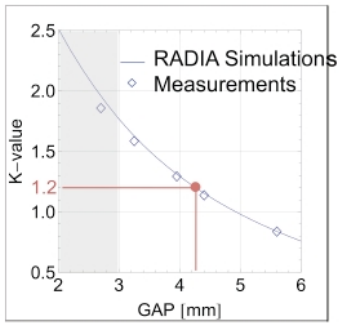

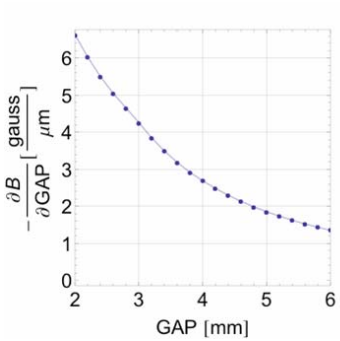

- B-Field profile measurements with the hall probe bench are reproduced by RADIA simulations.
- Results are a corresponding K-value and gap size.

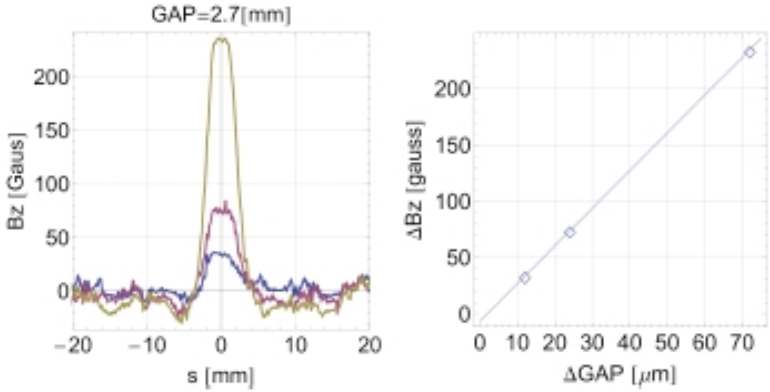

Example of local gap adjustm. (slope = 3.4 gauss/μm)

Courtesy of insertion device group

Present status of undulator U15 and outlook

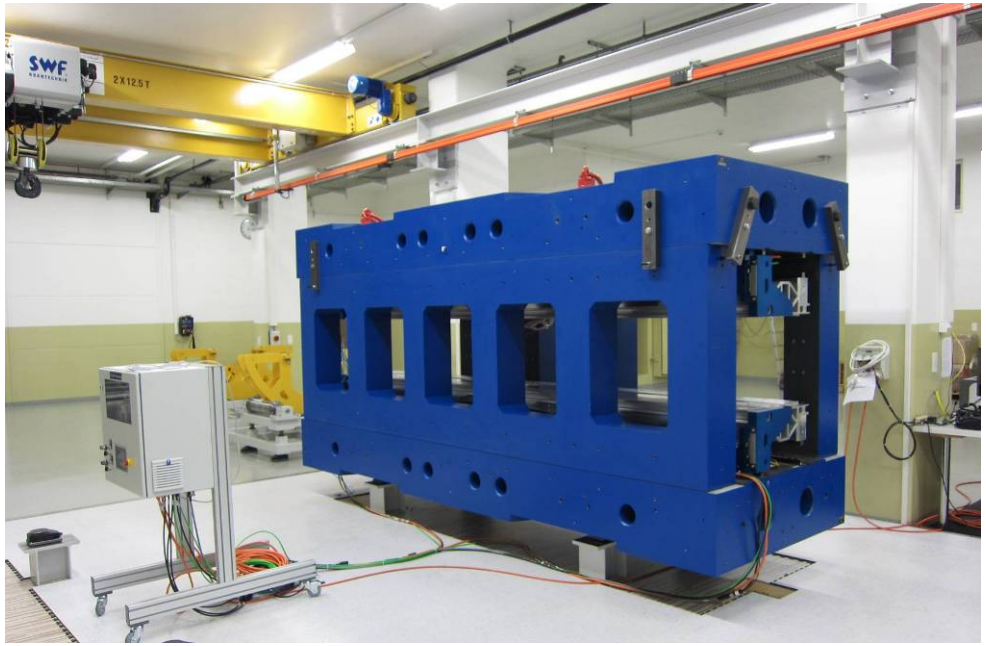

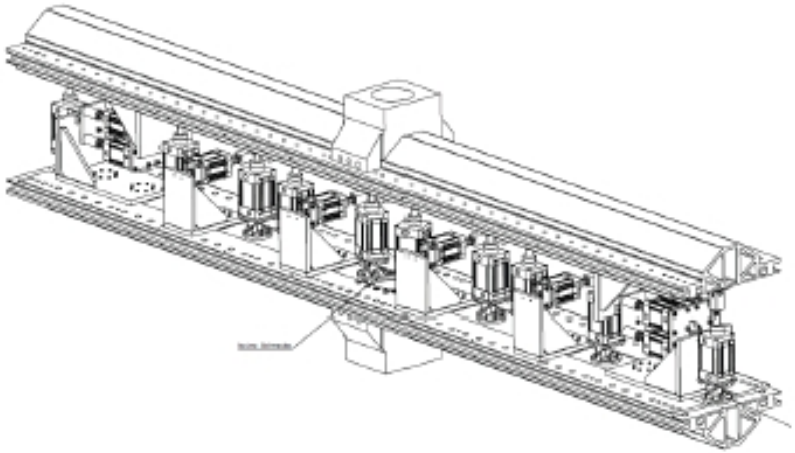

- Prototype has been assembled at MDC (Max Daetwyler Company in Switzerland)
- Tests and measurements are within specifications
- All four wedge drives have been tested (w/o magnetic forces)
- They will be tested again this month by means of pneumatic forces (equal to 3 tons)
- Prototype, inner I-beams with keeper blocks, NdFeB(Dy)-magnets, vacuum chamber and columns will be assembled and tested in the insertion device lab on site (PSI)
- Fully functional prototype is expected to be built in the 250 MeV injector in spring 2013

Outline

- Overview
- Goals and specific requirements of undulator U15
- Key components of design
- Summary

Summary

- Design of the undulator U15 is generic (same frame and same gap-drive for other undulators), cost-efficient and optimised for series production.
- Same 5-axis CAM shaft movers, same street transport design (with air cushions) and same supply of material is used for other undulators
- O-shaped frame of mineral cast transfers high stiffness to the inner I-beam and to the magnets where it is required.
- The fully functional prototype (with magnets) will be assembled and tested in the laboratory and will be inserted in the 250 MeV injector in spring 2013.
- Microundulator is used as a test bench for the block-keeper module for the NdFeB-Dy magnets
- Integrated and automated hall-probe measurement has been designed for in-air (ex-vacuum) and in-vacuum systems as well. It will be built and tested.
- This will allow automated adjustments of the magnetic gaps and in case of in-vacuum systems without removing the vacuum chamber (better accuracy).

On behalf of mechanical engineering departement and of group of insertion devices.

Thank you for your attention.