Mechanical Design of DEPU for Dreamline

Rong-bing Deng
Mechanical Engineering Group
SINAP

Oct. 18, 2012

Contents

- Goal
- Mechanical structure
  - Global design
  - magnet module
  - Support frame
  - Drive system
- Structure deformation
- Current state

SINAP

Goal

One insertion device ⟺ two EPU

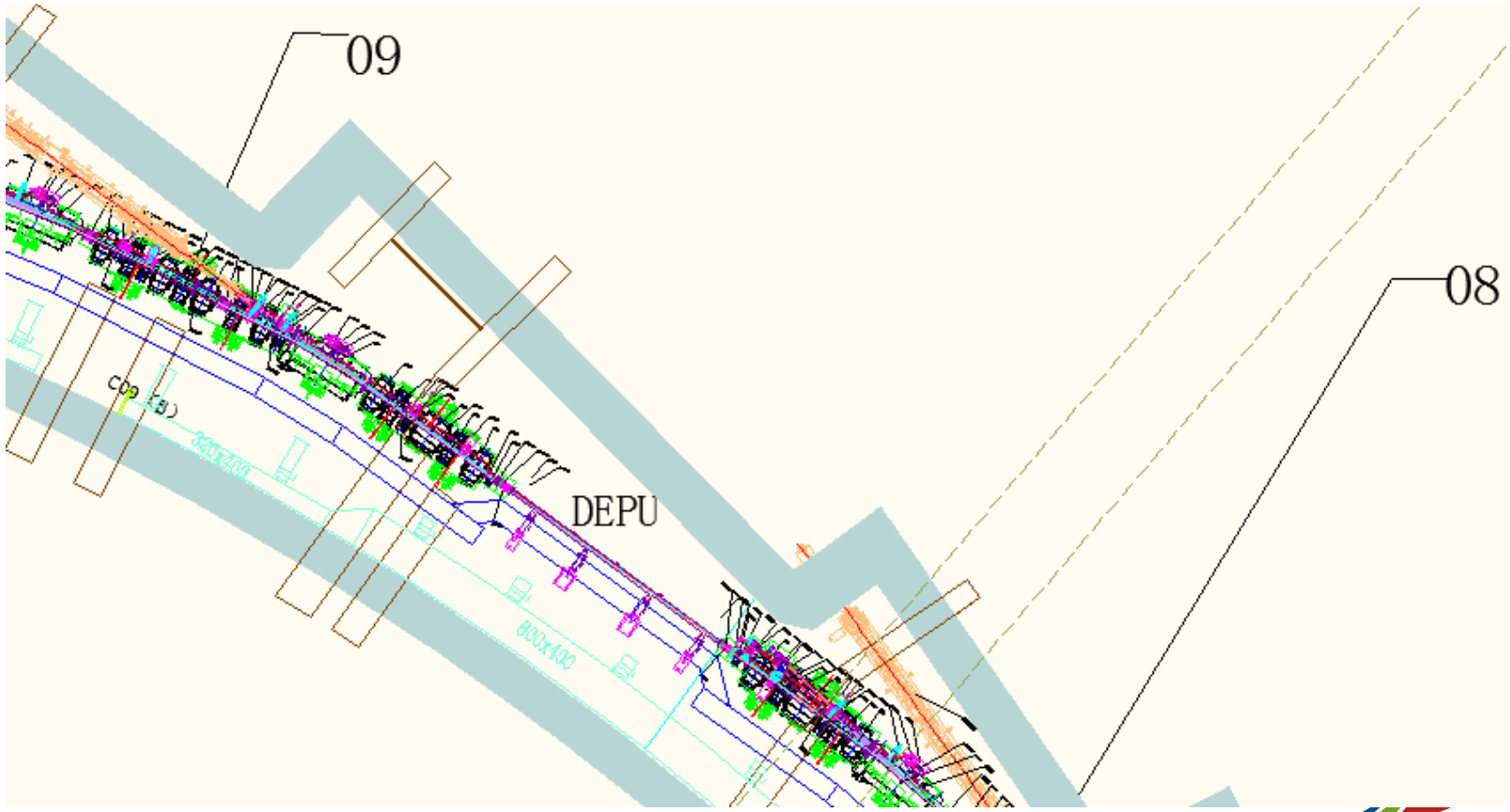

SINAP

Global mechanical structure

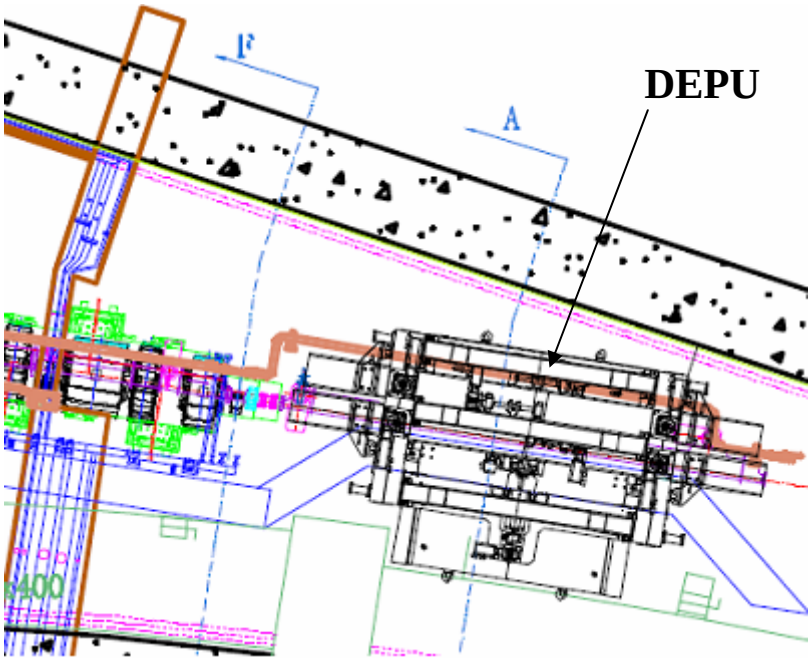

Main design parameters

	EPU58	EPU148
Beam length (mm)	4968	4884
Gap range (mm)	16.5-120	22-130
Shift range (mm)	±29	±74

Global mechanical structure

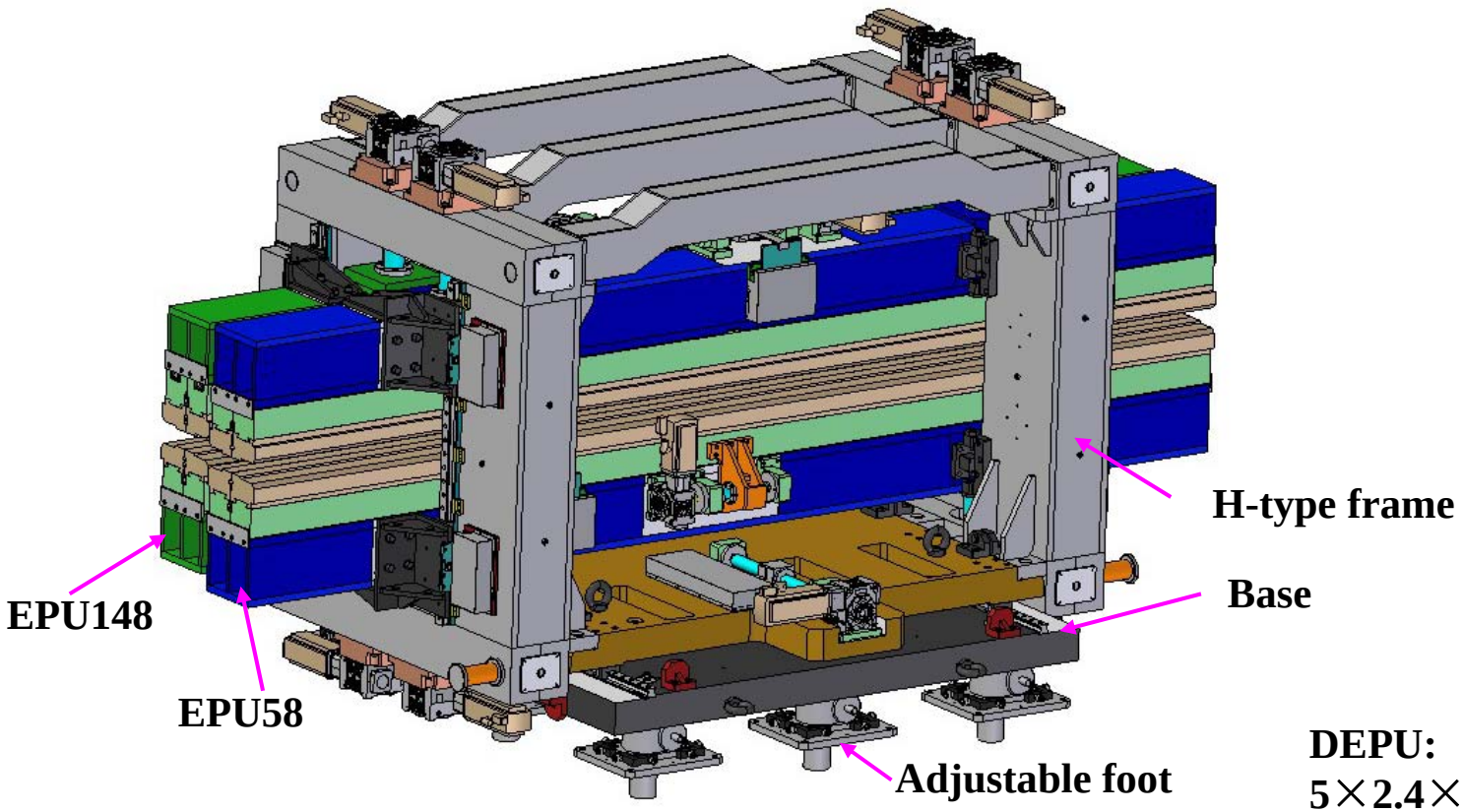

DEPU:
5×2.4×2.5m

Global mechanical structure

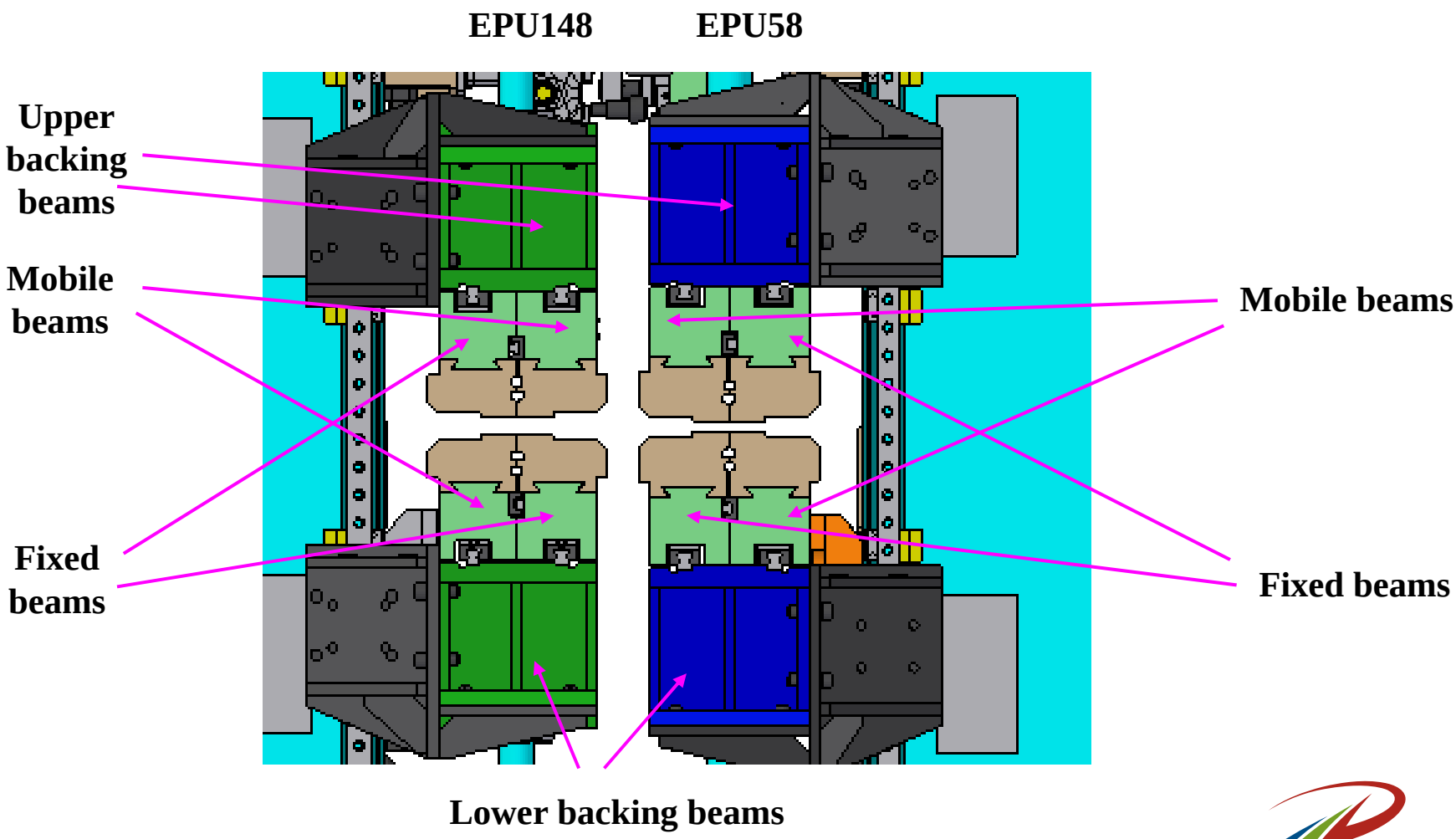

Global mechanical structure

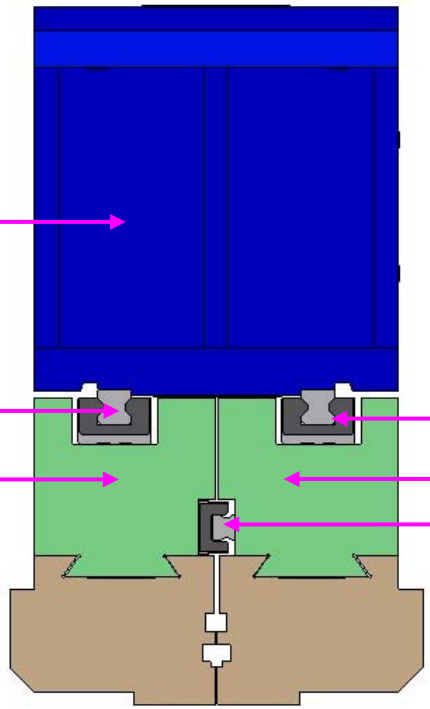

Magnet module

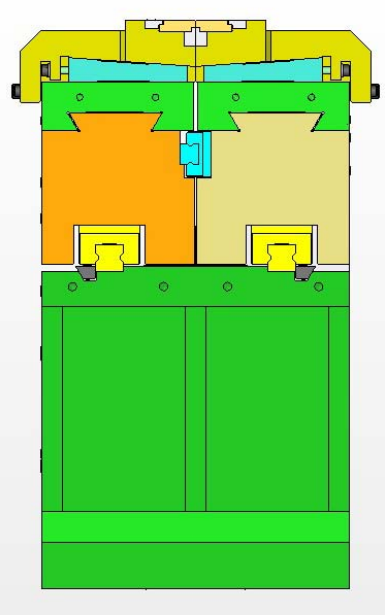

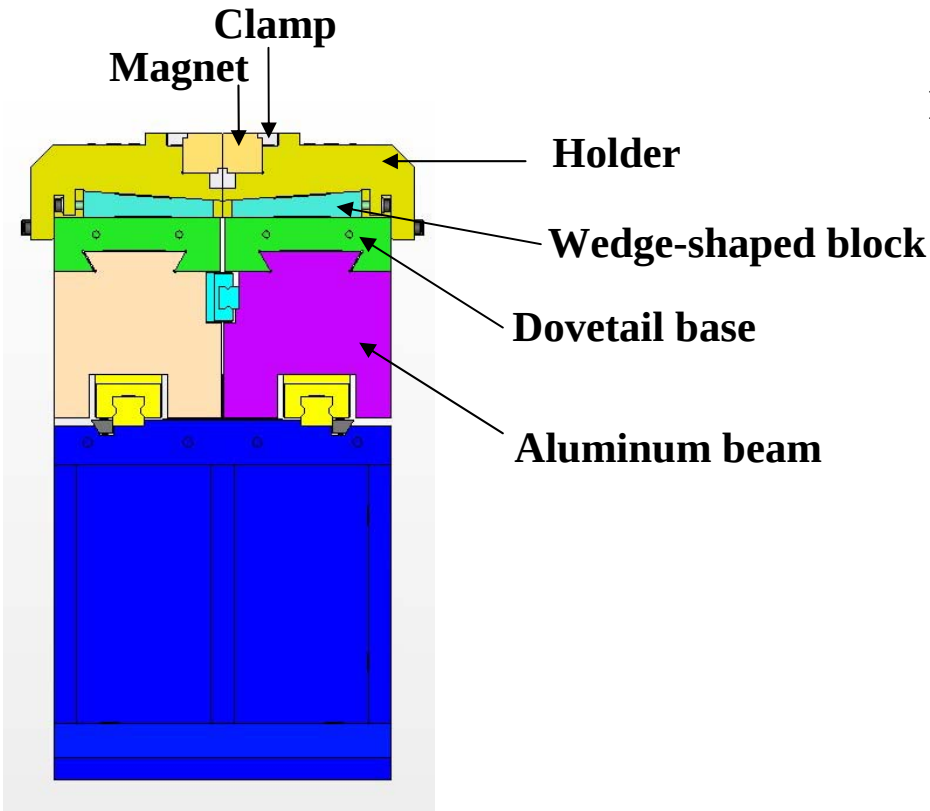

Magnet block

Magnet unit

Magnet module

(a) EPU148 (b) EPU58

Side sectional view of magnet assembly

Magnet module

EPU148:

- Each array: 133 magnet blocks
- Magnet module:1 or 3 magnet units

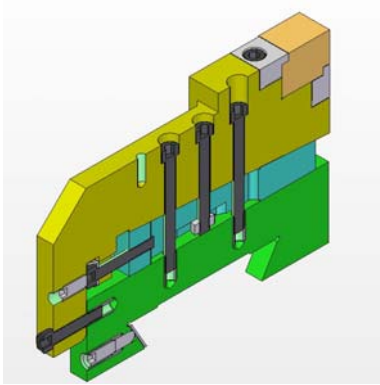

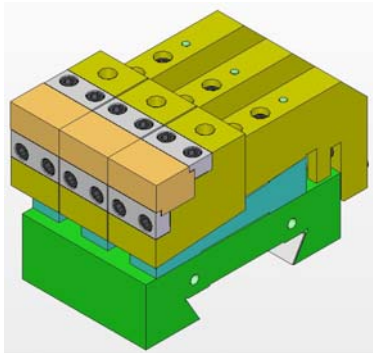

EPU58:

- Each array: 341 magnet blocks
- Magnet module:5 or 7 magnet units

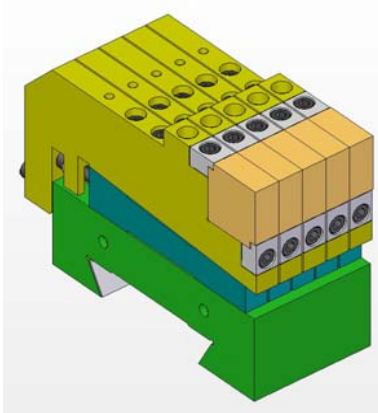

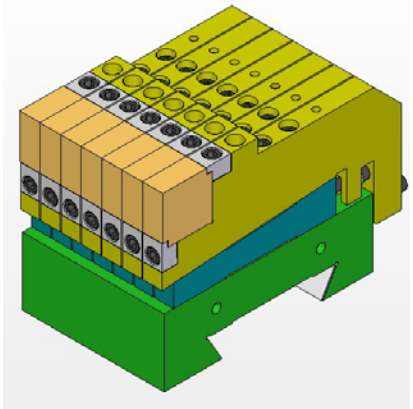

Magnet module

Magnet module

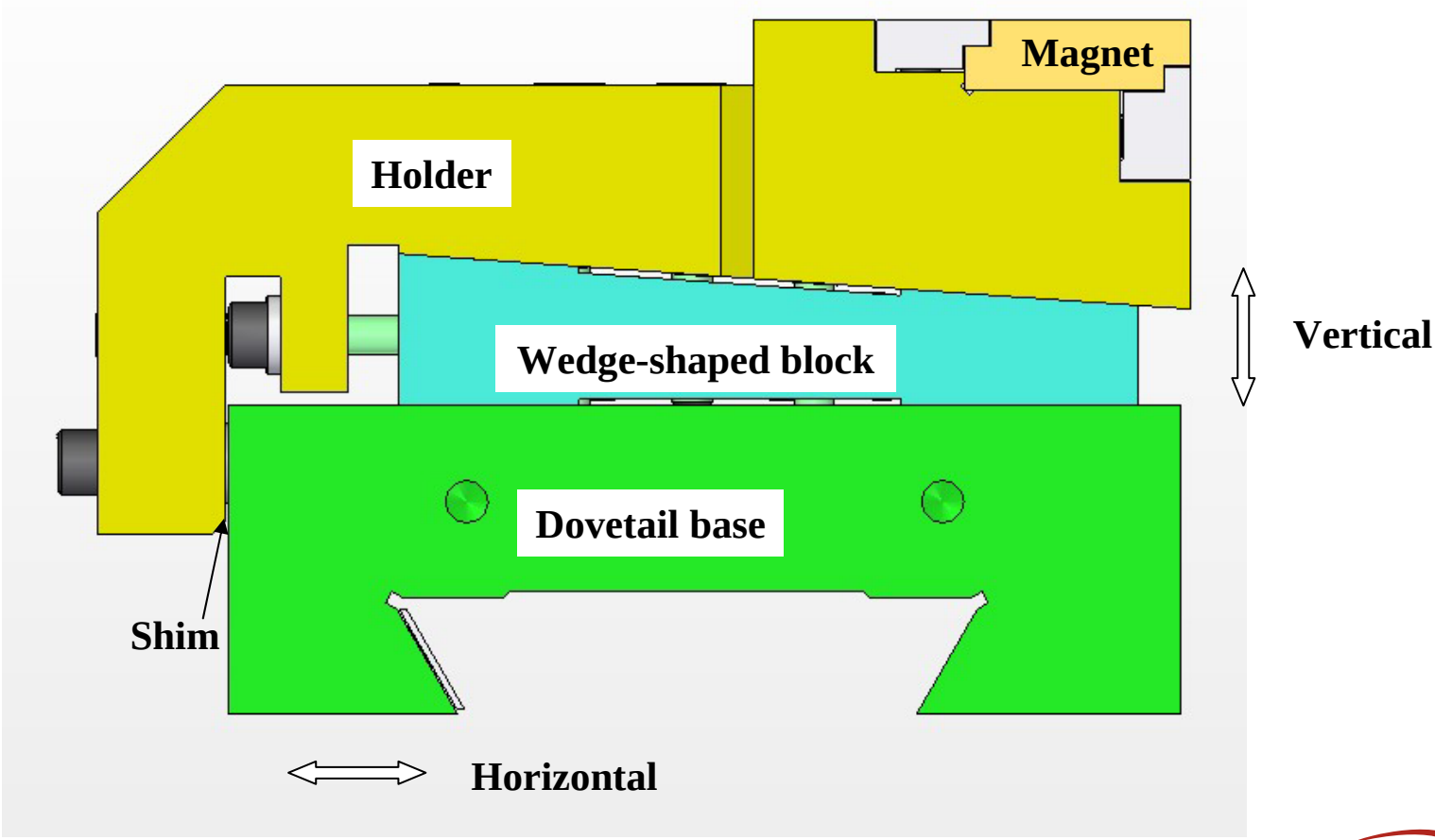

Vertical and horizontal adjustments

Support structure

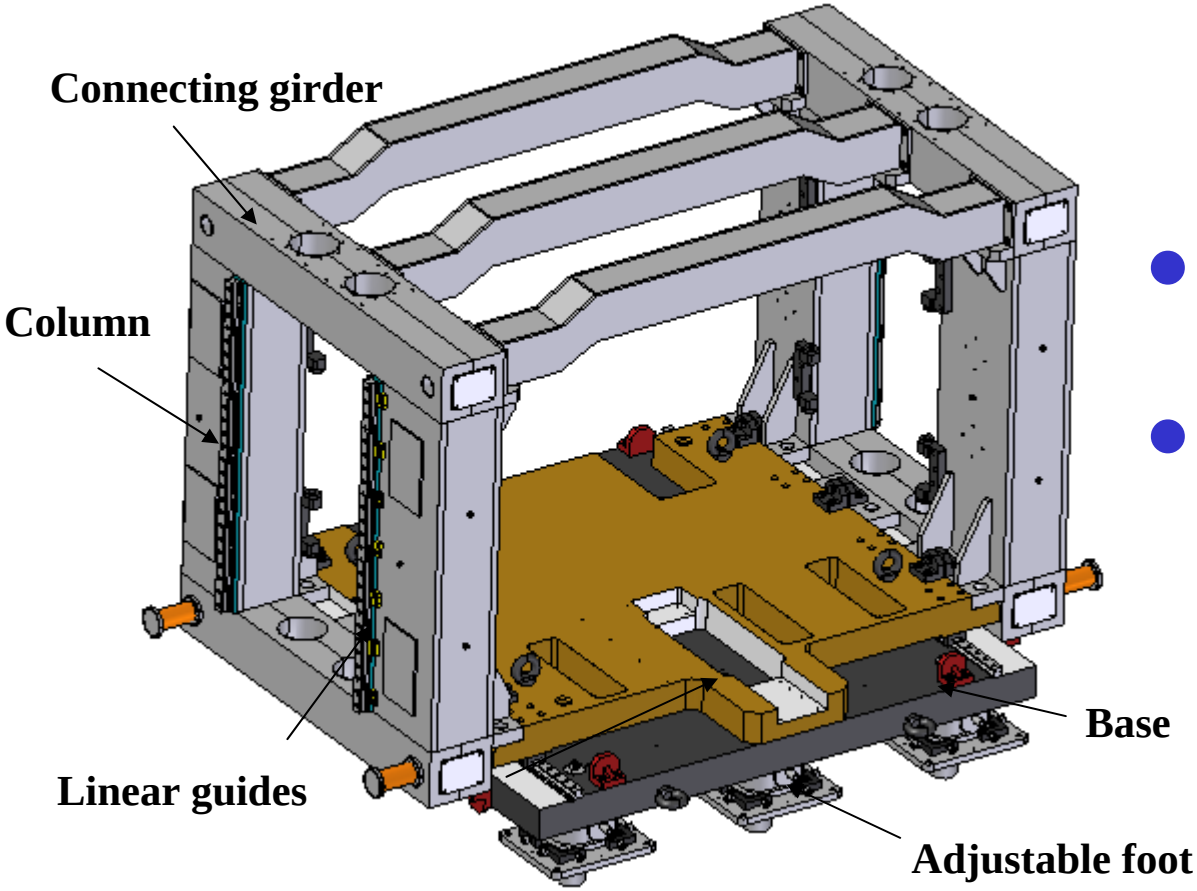

- Rough and fine processing
- Important working positions

Drive system

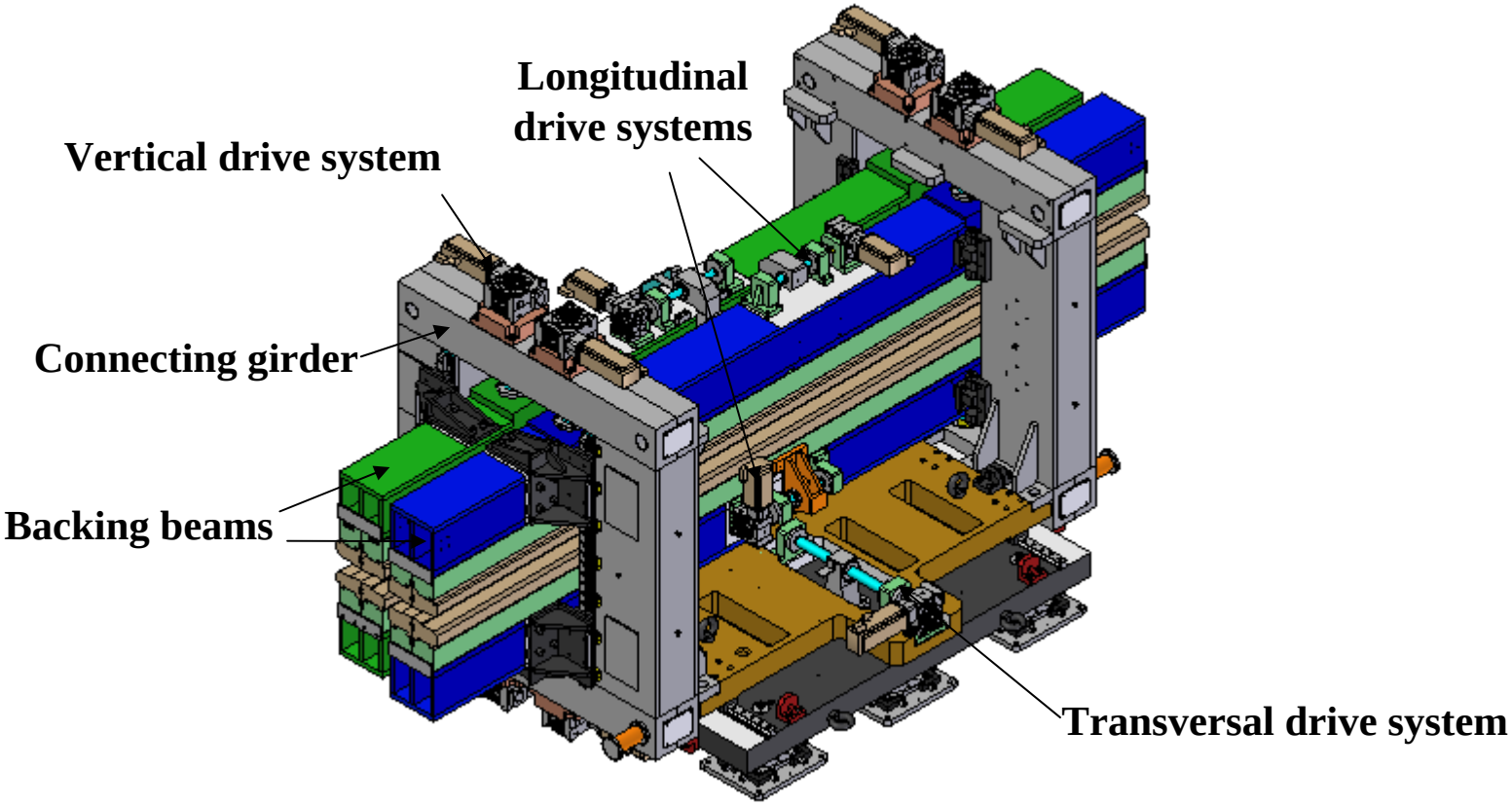

Structural deformation

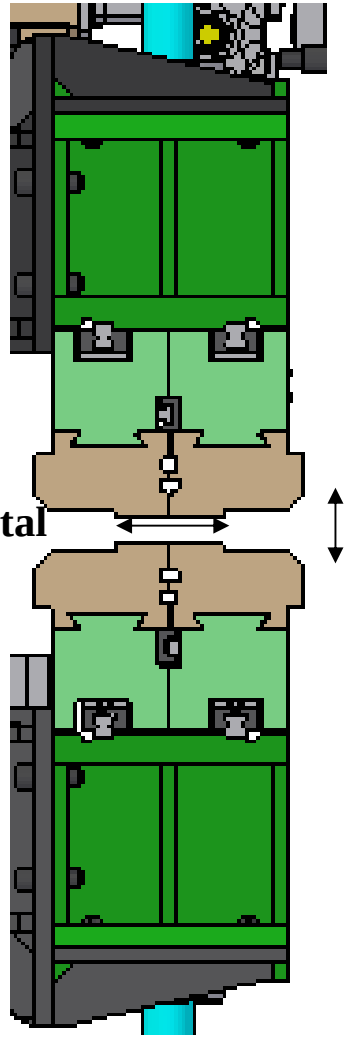

Goal:

Relative change of gap: ⩽ 20 μ m

- **Beam deformation**
- **Support frame deformation**

Magnetic forces

		EPU58	EPU148
vertical	Max attractive load (t)	3.2	2.6
	Max repulsive load (t)	1.9	1.4
horizontal	Max attractive load (t)	3.1	1.9
	Max repulsive load (t)	2.8	1.55

SINAP

Analysis of beam deformation

Optimization:

- **Cross section**

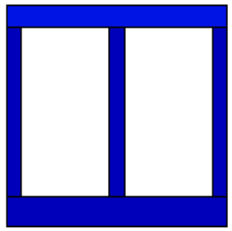

- **Support position**

Analysis of beam deformation

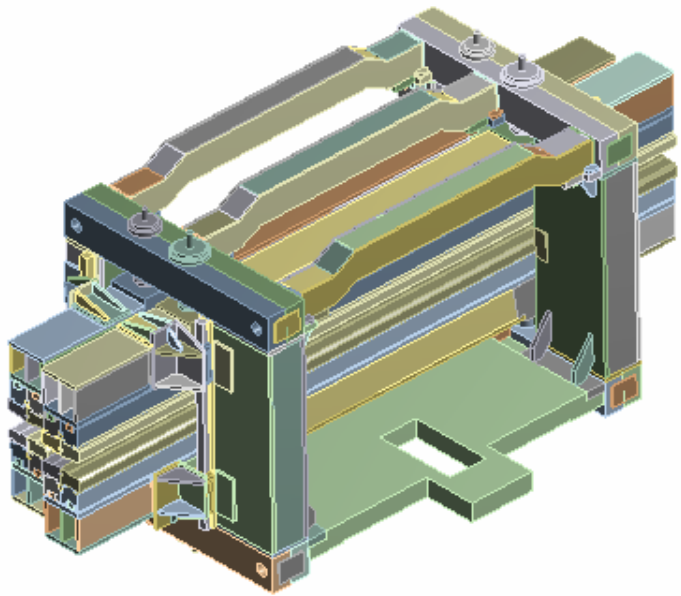

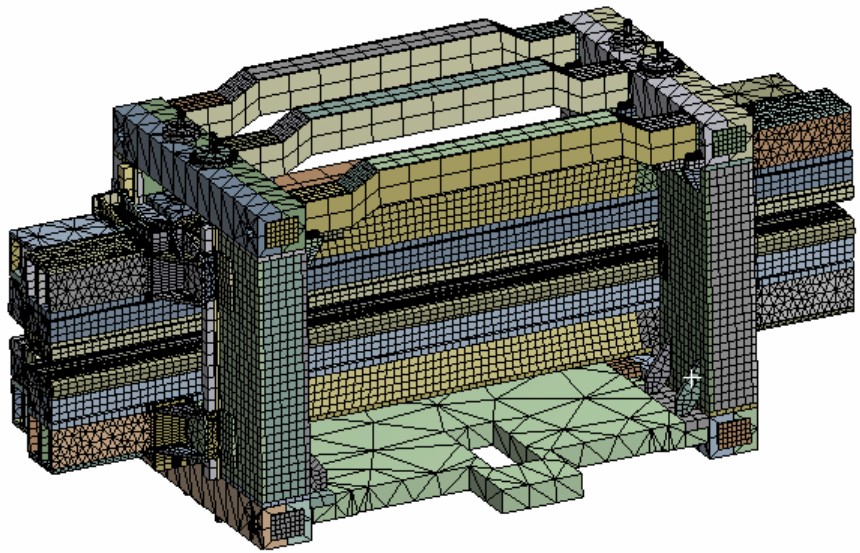

Model

- 3.2 t (vertical) on EPU58
- 3.1 t (horizontal) on EPU58
- 2.6 t (vertical) on EPU148
- 1.9 t (horizontal) on EPU148

SINAP

Analysis of beam deformation

Load applied:

- **Magnetic forces**
  - **3.2 t (vertical) on EPU58**
- **Structural self weight**

SINAP

Beam deformation

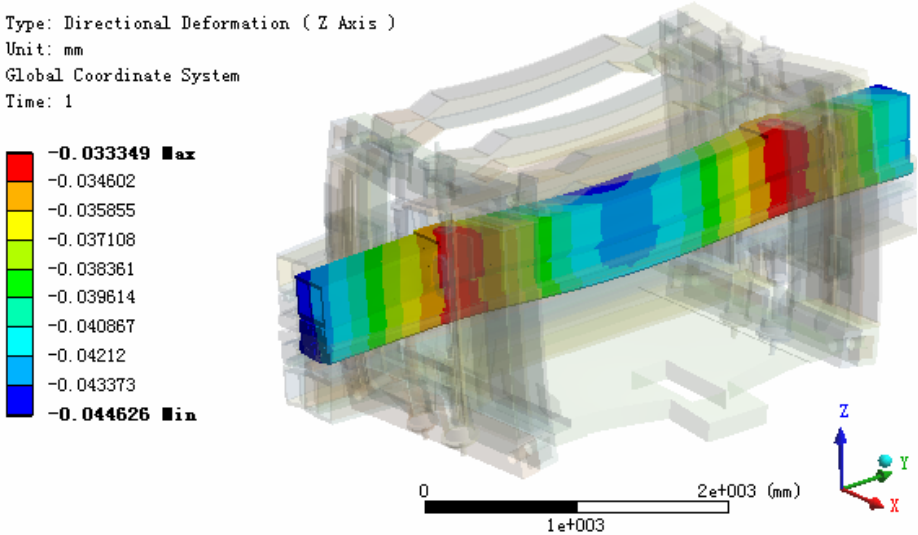

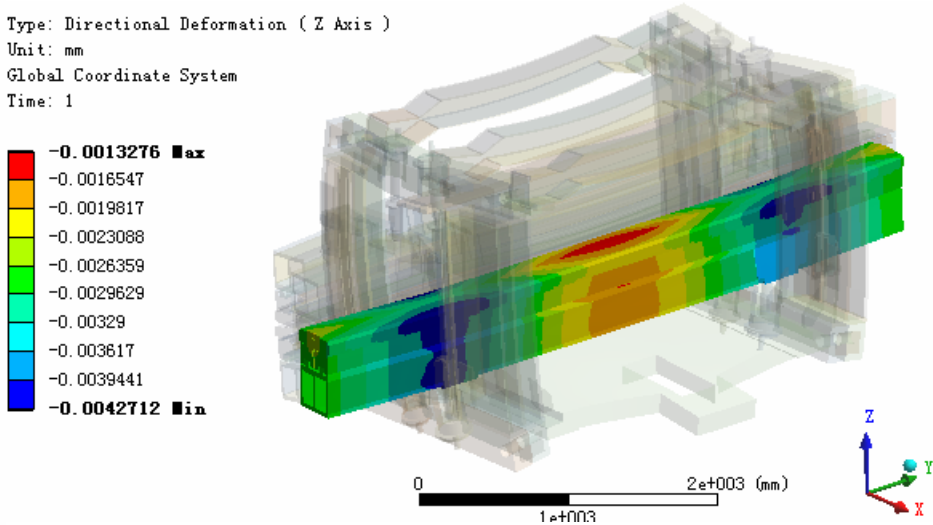

Upper beam **Lower beam**

Vertical (Z axis) deformation of EPU58 beams

SINAP

Beam deformation

EPU58

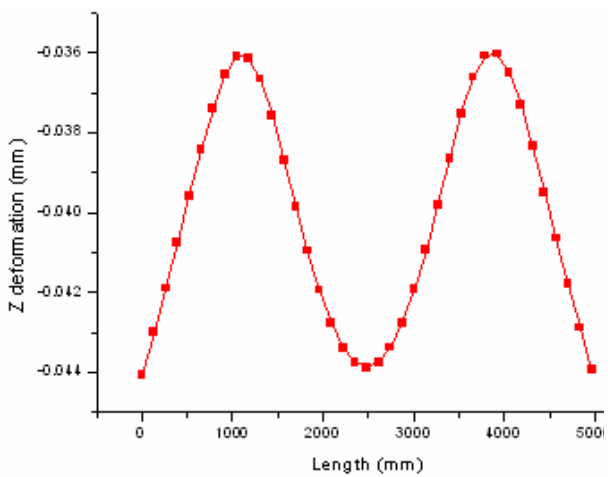

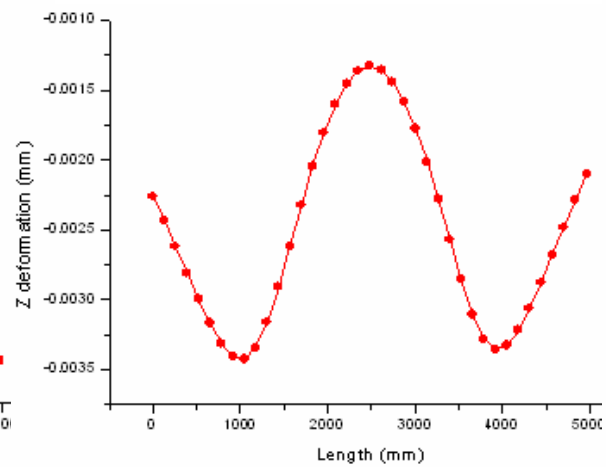

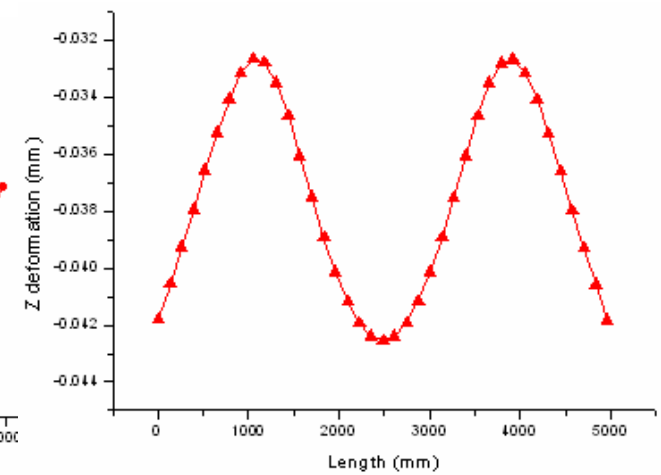

	Upper beam	Lower beam	Gap change
Max deformation:	**8 μ m**	**2.2 μ m**	**10 μ m**

Vertical deformation curves

Support structure

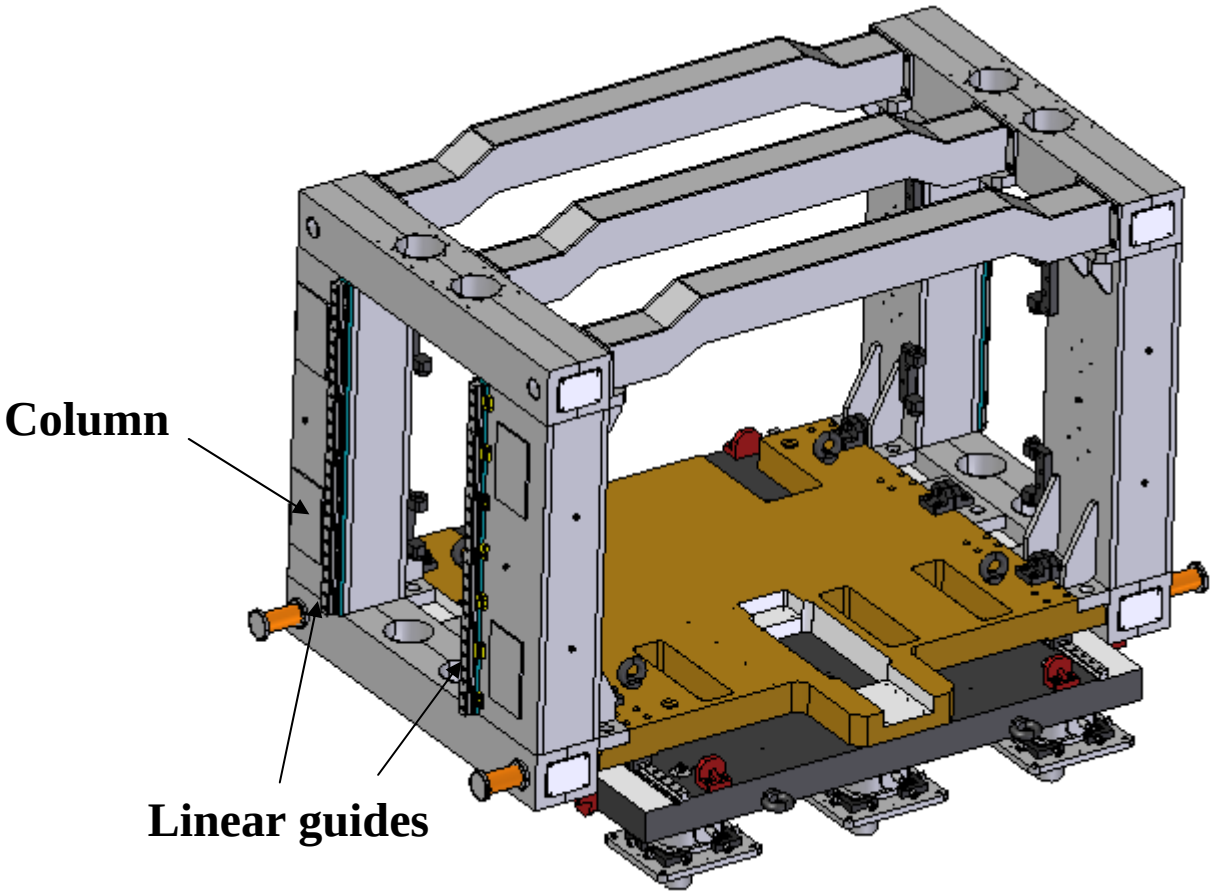

SINAP

Support structure deformation

Transversal deformation of support structure

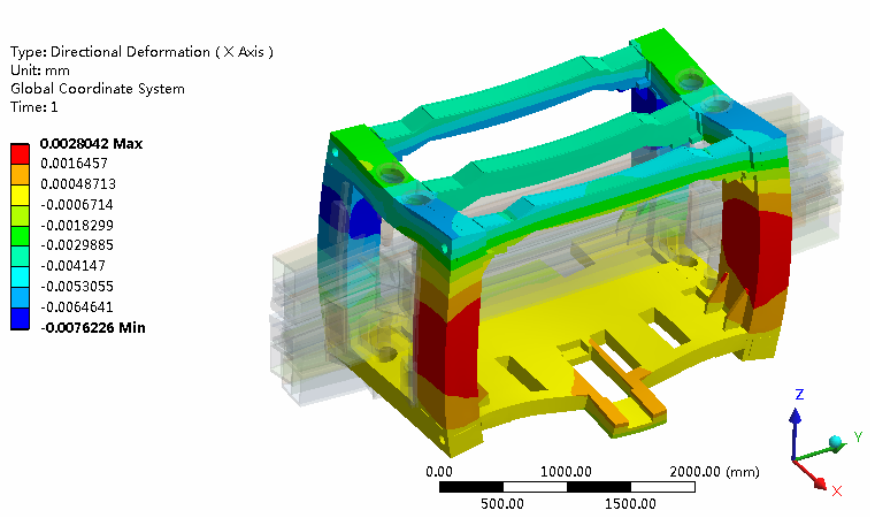

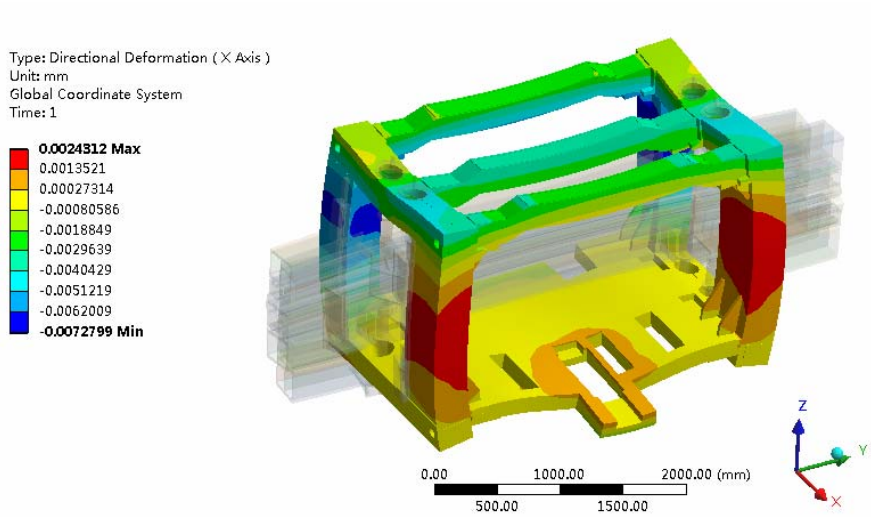

EPU58 is working at minimum gap and EPU148 is open to maximum gap

EPU148 is working at minimum gap and EPU58 is open to maximum gap

Max transversal deformation of columns (X): 12 μ m

SINAP

DEPU

Beam assembly

Magnet module

SINAP

DEPU

Support frame

DEPU

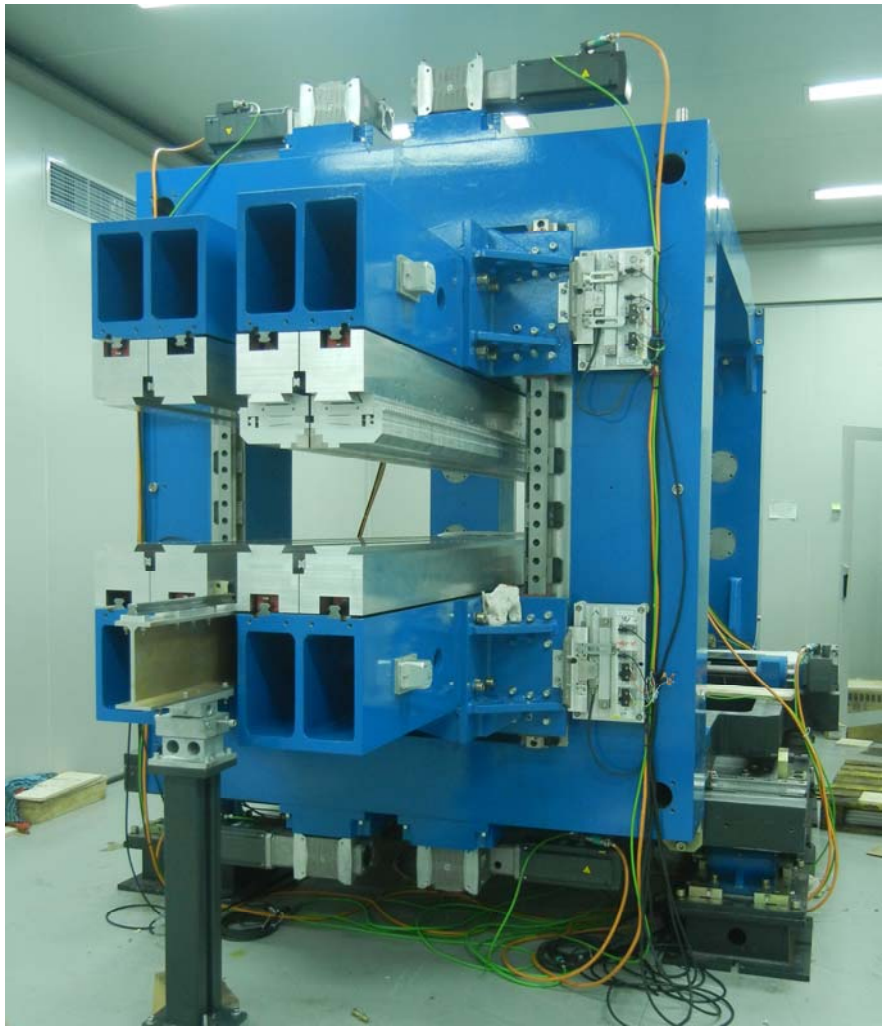

SINAP

Conclusion

- Results
  - Mechanical design of DEPU
  - The design satisfies DEPU physical requirement
- Future work
  - Installing magnet module, magnet measuring...
  - FEA ⟷ measurement activity

SINAP

Acknowledgement

Many thanks to:

Zhong-bao Yan, Min Zhang, Wei-liang Chen and other members of ME group of SINAP

SINAP

Thank you!

SINAP