Course Material

- ⇨ Introduction
  - Monroe Brothers Ltd
  - Structure of the talk
- ⇨ Principles of Refrigeration
  - Carnot efficiency
  - Real Efficiency
  - Costs
- ⇨ Refrigeration Systems
  - Main components
  - Cold Box operation
- ⇨ Superconducting RF cavities
  - Cooling requirements
  - Valve Box & transfer lines
  - Control
- ⇨ Other Cooling Requirements
  - Cryocoolers
  - Economics versus practicalities

© Monroe Brothers Ltd 2012. Please do not reproduce without the permission of the author.

Background

Over 25 years experience

- Pollution control systems

© Monroe Brothers Ltd 2012. Please do not reproduce without the permission of the author.

Background

20 Years Experience

- Pollution control systems
- Superconducting magnets
- Closed loop helium systems
- Low loss cryogenic systems 10 mW
- Reaction cooling at 120 kW
- Nitrogen for breweries

© Monroe Brothers Ltd 2012. Please do not reproduce without the permission of the author.

Background

Cryogenics – A Range of Applications!

Without liquid nitrogen

With liquid nitrogen

© Monroe Brothers Ltd 2012. Please do not reproduce without the permission of the author.

Monroe Brothers Ltd

- ⇨ Where is the other brother(s)?

- ⇨ Founded in 1920 - Shipping
- ⇨ Wound up in 1992

- ⇨ Restarted in 1996

© Monroe Brothers Ltd 2012. Please do not reproduce without the permission of the author.

Expectations?

© Monroe Brothers Ltd 2012. Please do not reproduce without the permission of the author.

Introduction

- ⇨ Introduction
  - Monroe Brothers Ltd
  - Structure of the talk
- ⇨ **Principles of Refrigeration**
  - **Carnot efficiency**
  - **Real Efficiency**
  - **Costs**
- ⇨ Refrigeration Systems
  - Main components
  - Cold Box operation
- ⇨ Superconducting RF cavities
  - Cooling requirements
  - Valve Box & transfer lines
  - Control
- ⇨ Other Cooling Requirements
  - Cryocoolers
  - Economics versus practicalities

© Monroe Brothers Ltd 2012. Please do not reproduce without the permission of the author.

Overview

Cryomech PT410

Linde Kryotechnik AG

© Monroe Brothers Ltd 2012. Please do not reproduce without the permission of the author.

Objective

Broad Outline of three methods to provide cooling at 4 K:

- ⇨ Large Scale Helium Liquefiers / Refrigerators
- ⇨ Cryocoolers
- ⇨ Bulk cryogens

Select the best cooling method for a cryogenic process

© Monroe Brothers Ltd 2012. Please do not reproduce without the permission of the author.

Bulk Cryogens

- Low loss cryostats
  Minimum heat load
- Simple
- Minimum capital expenditure

© Monroe Brothers Ltd 2012. Please do not reproduce without the permission of the author.

HELIUM LIQUEFIERS

- ⇨ Large capacity
- ⇨ Expensive
- ⇨ Infrastructure
- ⇨ Skilled operators

Image courtesy of Linde Kryotechnik Ag

© Monroe Brothers Ltd 2012. Please do not reproduce without the permission of the author.

Refrigeration Systems

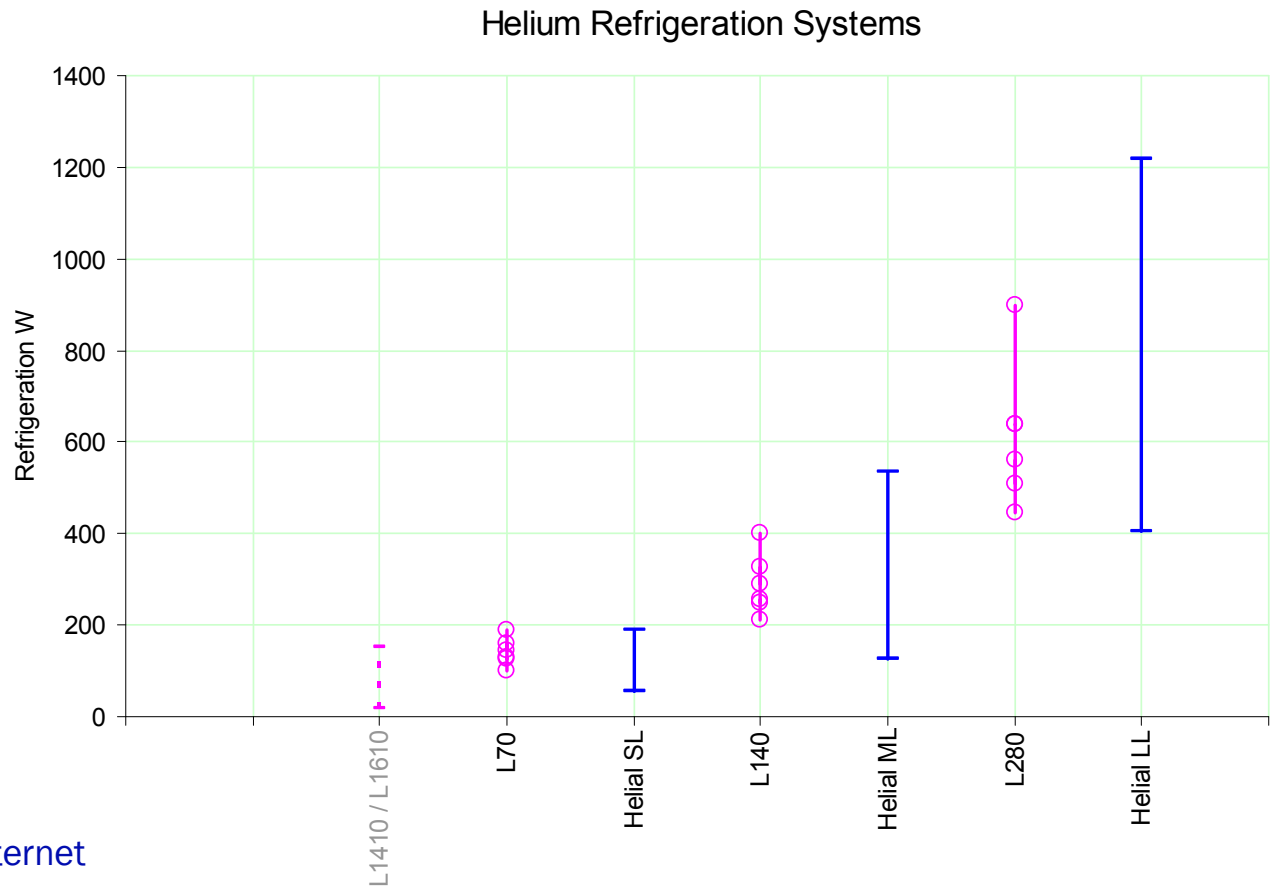

Data from the internet

Liquefaction duties factored to estimate the Refrigeration power

© Monroe Brothers Ltd 2012. Please do not reproduce without the permission of the author.

Cryocoolers

- Cooling powers up to 1.5 W at 4 K
  40 W at 45 K
- Enabling technology
  HTSC leads
- Zero Loss - cryostats with zero boil-off
- Dry Systems - no inventory of cryogens

Cryomech PT410

Image from www,cryomech.com

© Monroe Brothers Ltd 2012. Please do not reproduce without the permission of the author.

Refrigeration Systems

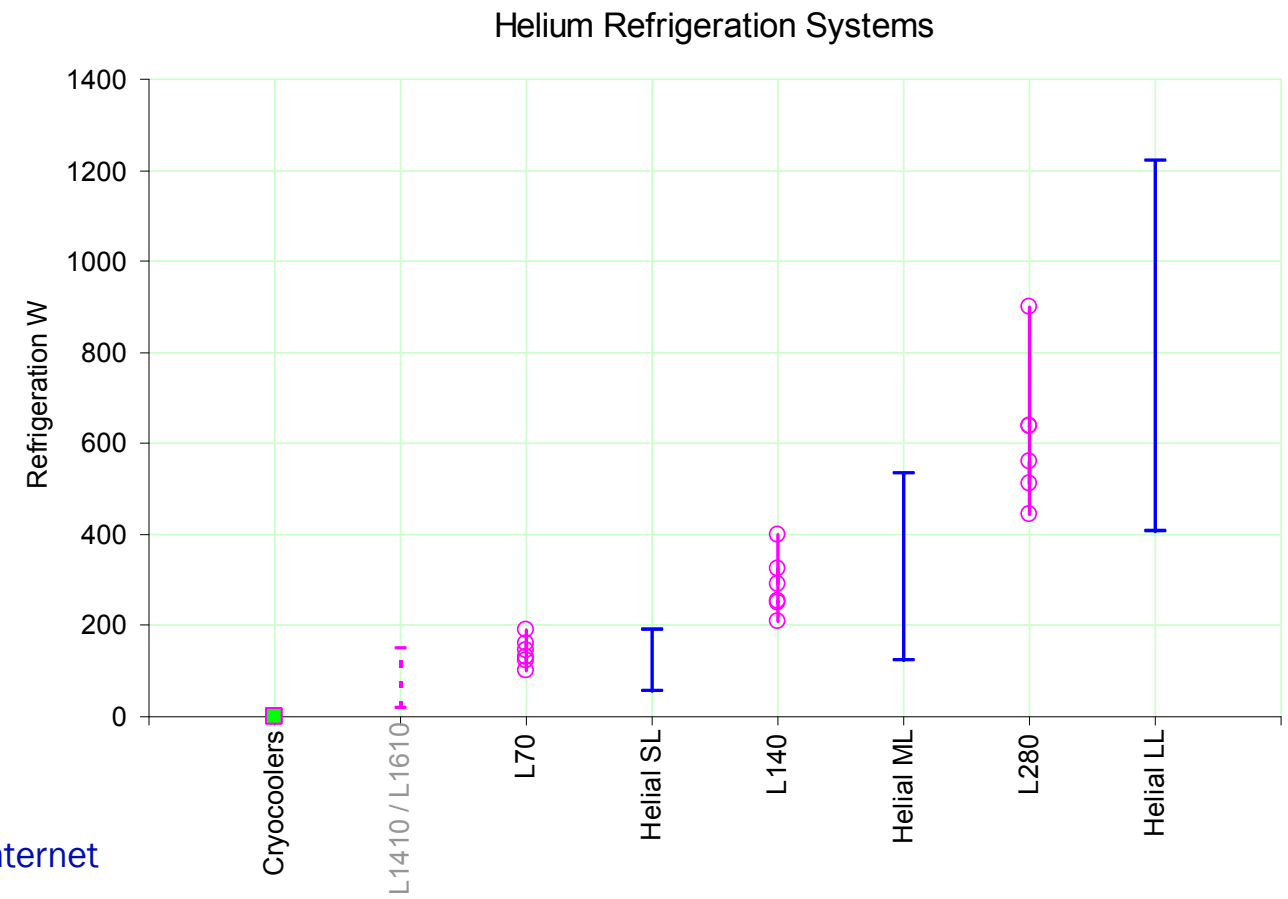

Data from the internet

Liquefaction duties factored to estimate the Refrigeration power

© Monroe Brothers Ltd 2012. Please do not reproduce without the permission of the author.

Theoretical Performance

First Law — When a system executes a cyclic process the algebraic sum of the work transfers is equal to the algebraic sum of the heat transfers.

Second Law — It is impossible to construct a device that will operate in a cycle and produce no effect except the raising of a weight and the exchange of heat with a single reservoir.

Heat Engines

Absolute temperature scale

Measures of efficiency

$$\frac{W_R}{T_H - T_C} = \frac{q_H}{T_H} = \frac{q_C}{T_C}$$

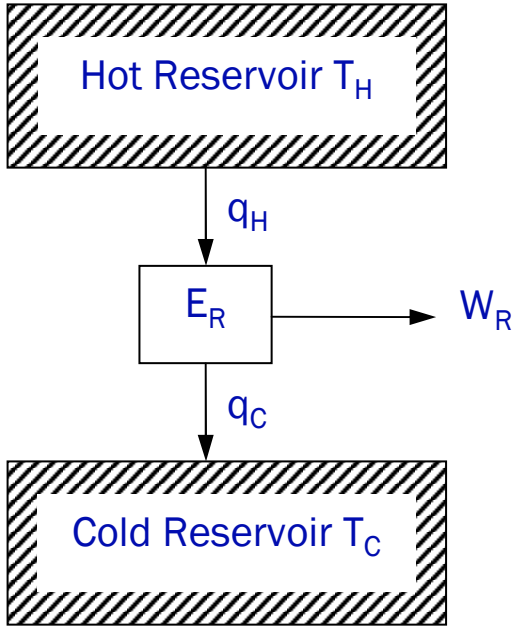

© Monroe Brothers Ltd 2012. Please do not reproduce without the permission of the author.

Theoretical Performance

Refrigerator or Heat Pump

$$COP = \frac{q_C}{W_R} = \frac{T_C}{T_H - T_C}$$

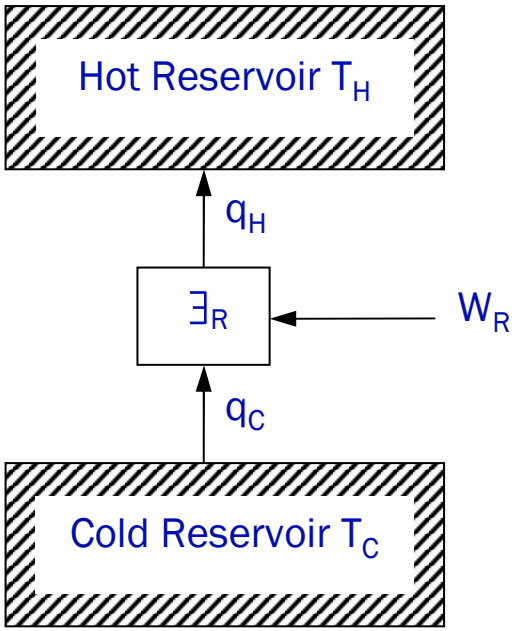

© Monroe Brothers Ltd 2012. Please do not reproduce without the permission of the author.

Refrigeration at 4 K

$$COP = \frac{q_C}{W_R} = \frac{T_C}{T_H - T_C}$$

$$COP = \frac{q_C}{W_R} = \frac{4.3}{300 - 4.3}$$

$$COP = \frac{q_C}{W_R} = 0.015$$

$$\frac{1}{COP} = \frac{W_R}{q_C} = 67$$

© Monroe Brothers Ltd 2012. Please do not reproduce without the permission of the author.

Refrigeration at 4 K & 80 K

$$COP = \frac{q_C}{W_R} = \frac{T_C}{T_H - T_C}$$

$$COP = \frac{q_C}{W_R} = \frac{4.3}{300 - 4.3}$$

$$COP = \frac{q_C}{W_R} = 0.015$$

$$\frac{1}{COP} = \frac{W_R}{q_C} = 67$$

$$COP = \frac{q_C}{W_R} = \frac{T_C}{T_H - T_C}$$

$$COP = \frac{q_C}{W_R} = \frac{80}{300 - 80}$$

$$COP = \frac{q_C}{W_R} = 0.376$$

$$\frac{1}{COP} = \frac{W_R}{q_C} = 2.7$$

© Monroe Brothers Ltd 2012. Please do not reproduce without the permission of the author.

Strobridge Plot

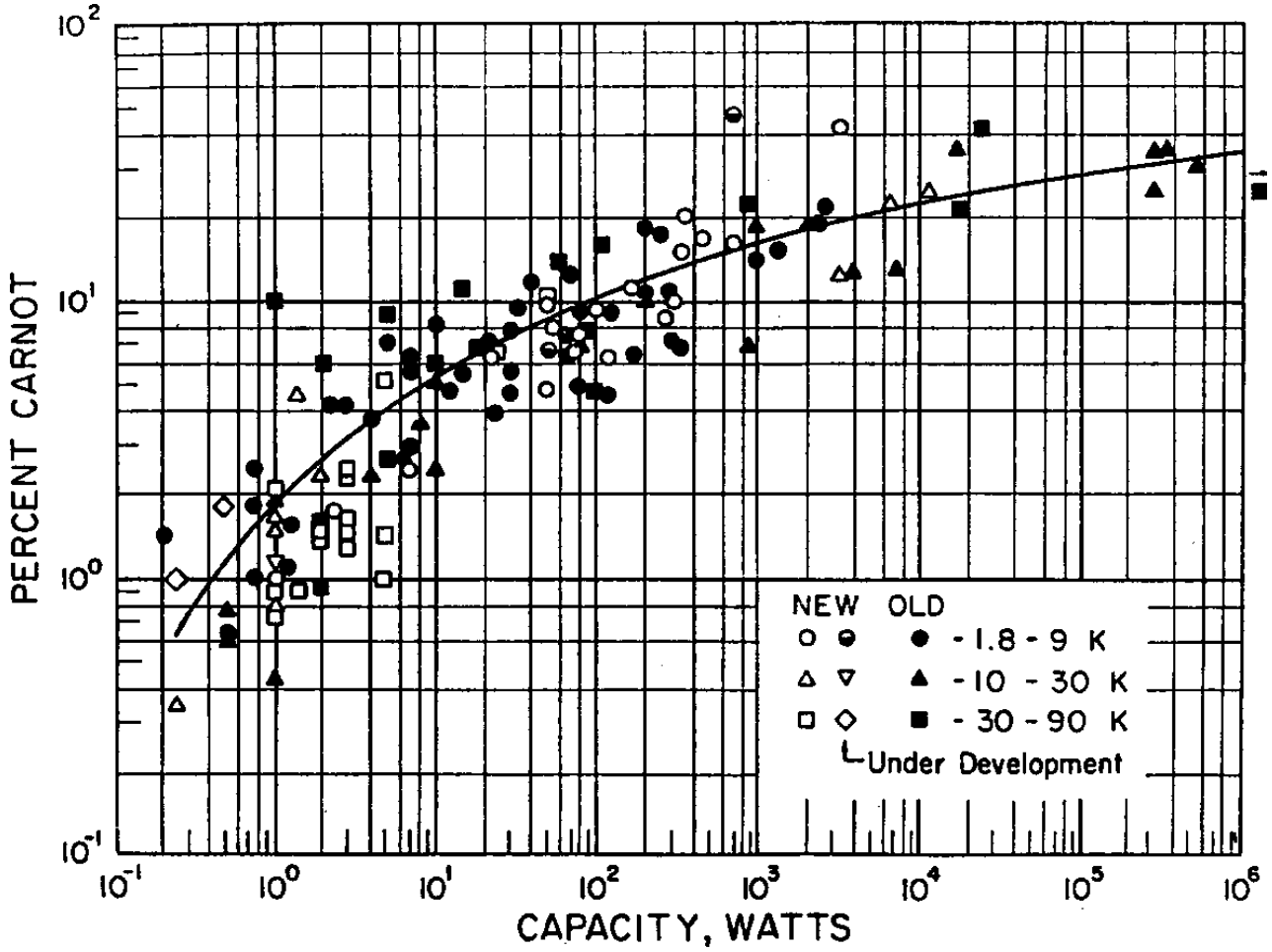

Strobridge 1969

Refrigeration for Superconducting and Cryogenic Systems

Credit to Martin Wilson

© Monroe Brothers Ltd 2012. Please do not reproduce without the permission of the author.

Refrigeration Sizing

$$COP_{Real} = COP_{Ideal} \times \text{Percent of Carnot}$$

$$\text{Real}\left\{\frac{q_C}{W_R}\right\} = \frac{T_C}{T_H - T_C} \times \text{Percent of Carnot}$$

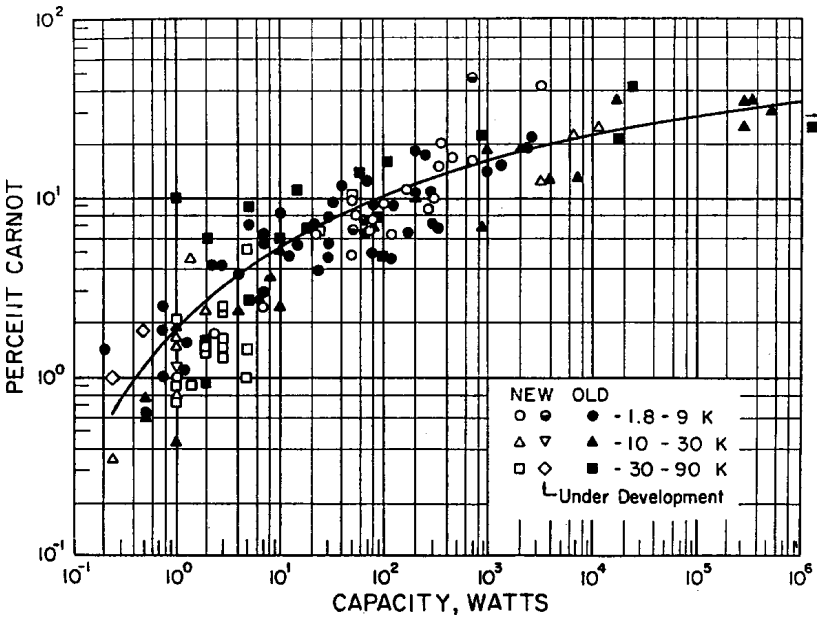

	Liquefier	Cryocooler	
Cooling power	200	1	W
Cold Temperature	4.3	4.3	K
Hot Temperature	300	300	K
Ideal Carnot	0.0145	0.0145	
Percent of Carnot	12%	2%	
Compressor power	116	3.45	kW
Compressor power	570	3450	W per W refrigeration

© Monroe Brothers Ltd 2012. Please do not reproduce without the permission of the author.

Strobridge Plot

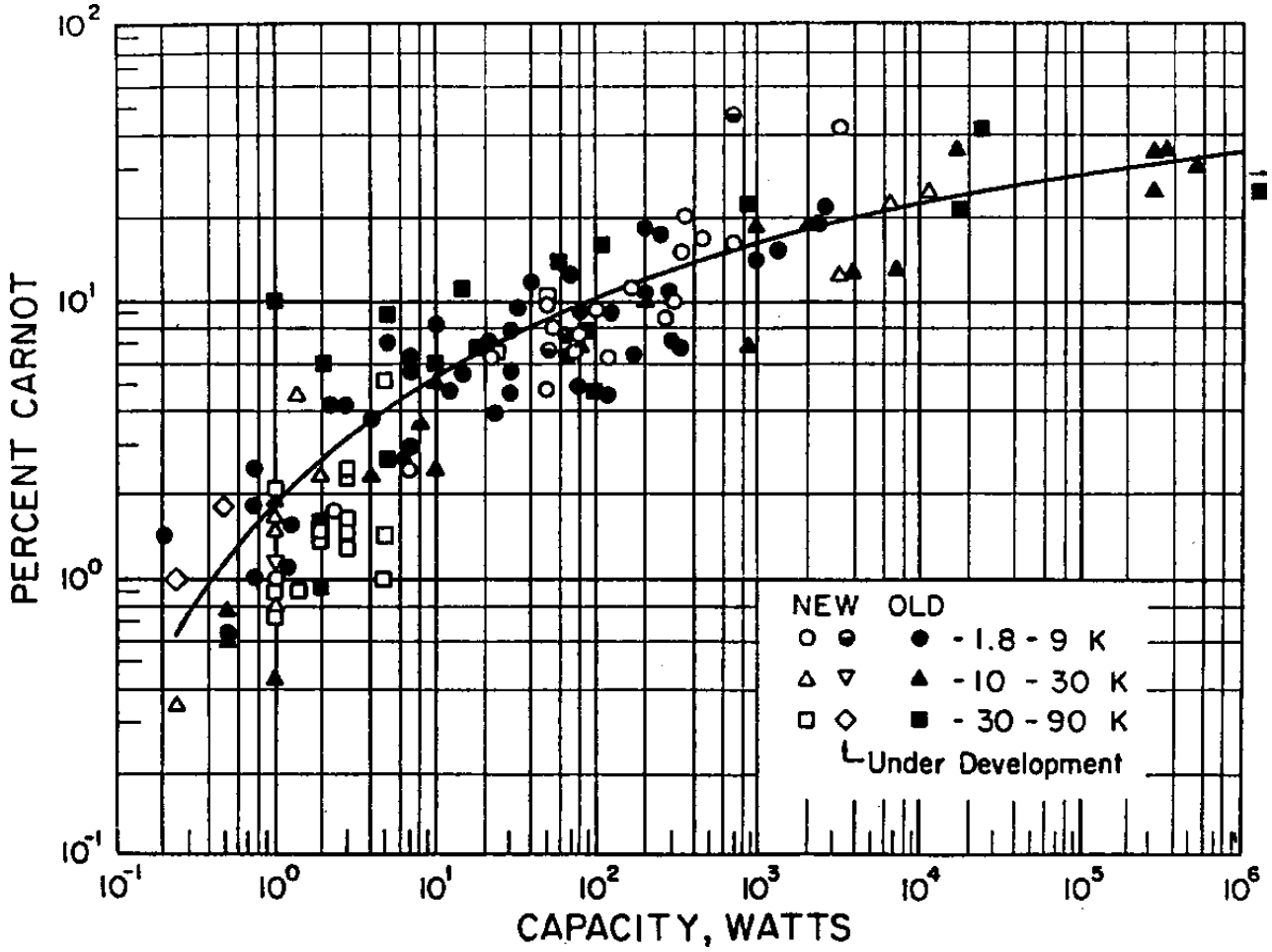

Strobridge 1969

Refrigeration for Superconducting and Cryogenic Systems

Credit to Martin Wilson

© Monroe Brothers Ltd 2012. Please do not reproduce without the permission of the author.

Comparison 1969 to 2009

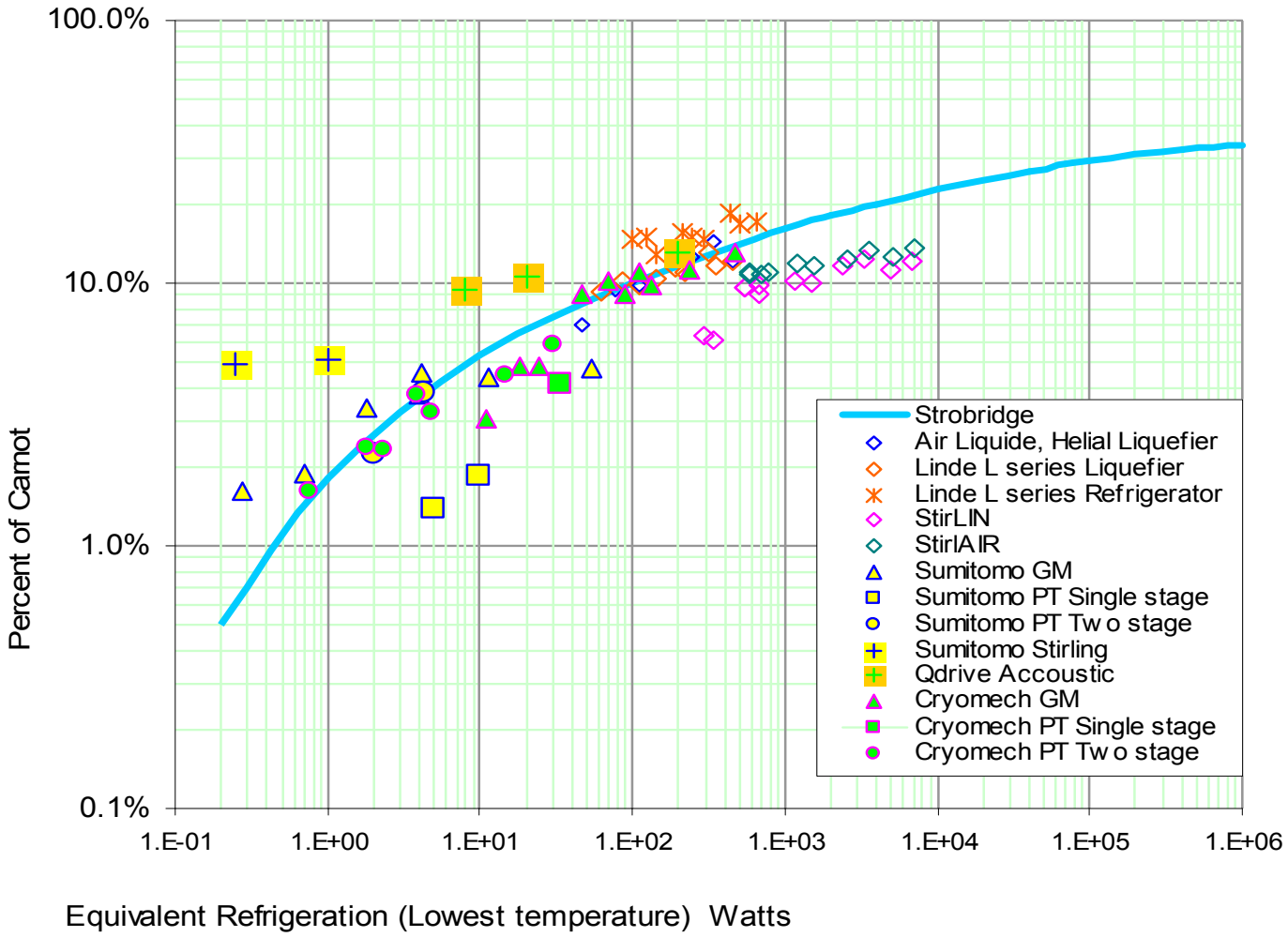

© Monroe Brothers Ltd 2012. Please do not reproduce without the permission of the author.

Comparison 1969 to 2009

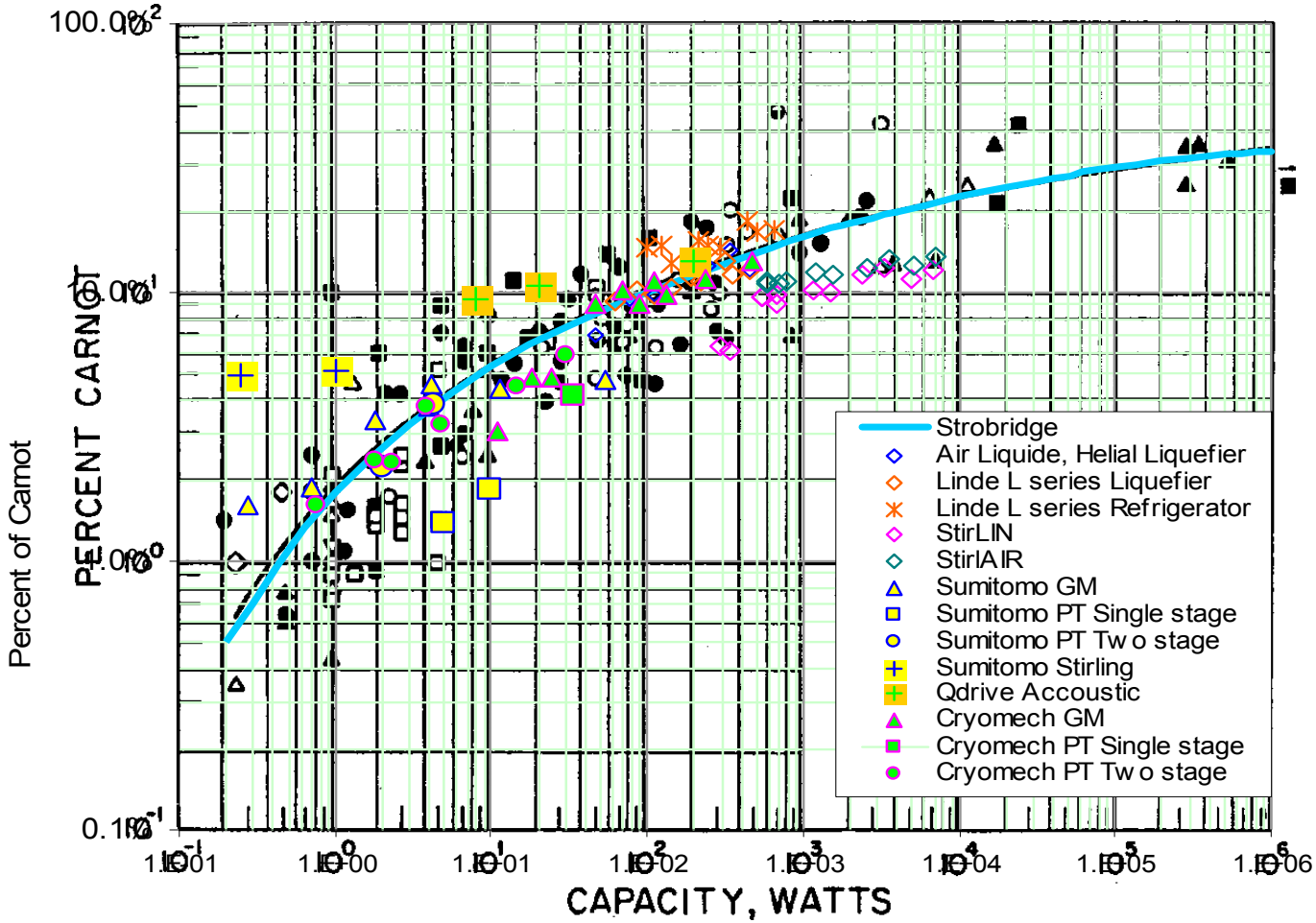

Equivalent Refrigeration (Lowest temperature) Watts

© Monroe Brothers Ltd 2012. Please do not reproduce without the permission of the author.

Helium Liquefiers ~ 100 Watts

⇨ Ideal versus the Practical

Ideal 1 / COP = 70 Practical 1 / COP = 700

Factor of 7 to 15 times worse than theoretical

To obtain 1 W of cooling at 4.2 K requires
≈ 0.3 to 0.7 kW of input power

- Basic laws of thermodynamics

- Temperature losses in the heat exchangers
- Heat load from ambient
- Fluid flow friction losses in the pipeline

© Monroe Brothers Ltd 2012. Please do not reproduce without the permission of the author.

Cryocoolers ~ 1 watt

⇨ Ideal versus the Practical

Ideal 1 / COP = 70 Practical 1 / COP = 5000

Factor of 70 times worse than theoretical

To obtain 1 W of cooling at 4.2 K requires
≈ 3 to 8 kW of input power

- Basic laws of thermodynamics

- Temperature losses in the heat exchangers
- Heat load from ambient
- Fluid flow friction losses in the pipeline
- "One size of compressor fits all"

© Monroe Brothers Ltd 2012. Please do not reproduce without the permission of the author.

Installed Costs

	Cryocooler 1 W to 1.5 W	Helium Refrigerator 500 W	Bulk Cryogens
Equipment	$ 40 k to $ 65 k	$ 2 M to $ 4.0 M	
Operating costs	$ 25 k pa	$ 700 k pa	
Specific Costs			
- equipment	$ 50 k per W	$ 5 k per W	
- refrigeration	$ 15 k pa per W	$ 2 k to $ 4 k pa per W	$ 100 k to $ 200 k pa per W
Specific Costs			
- equipment		$ 20 k per l / hr	
- liquefaction		$ 0.50 to $ 2.00 per litre	$ 10 to $ 20 per litre

Indicative figures for installed costs
Depends on marginal costing

© Monroe Brothers Ltd 2012. Please do not reproduce without the permission of the author.

Basic Principles

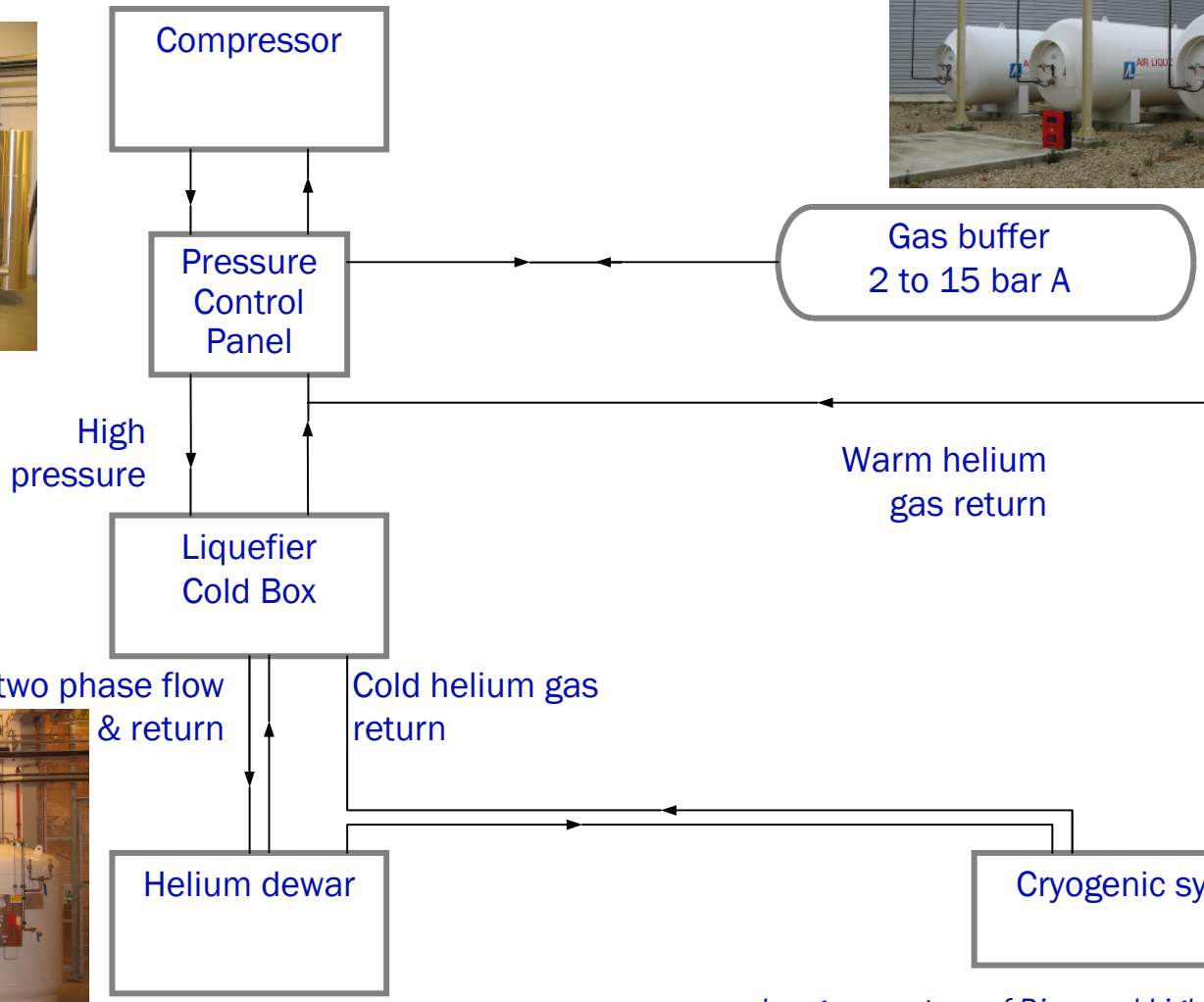

Images courtesy of Diamond Light Source Ltd

© Monroe Brothers Ltd 2012. Please do not reproduce without the permission of the author.

Technologies Superconductivity

Superconducting RF Cavities

- Diamond Light Source Ltd
- Synchrotron engine room!
- Cooling Demand

  100 W per cavity

  plus

  50 W distribution

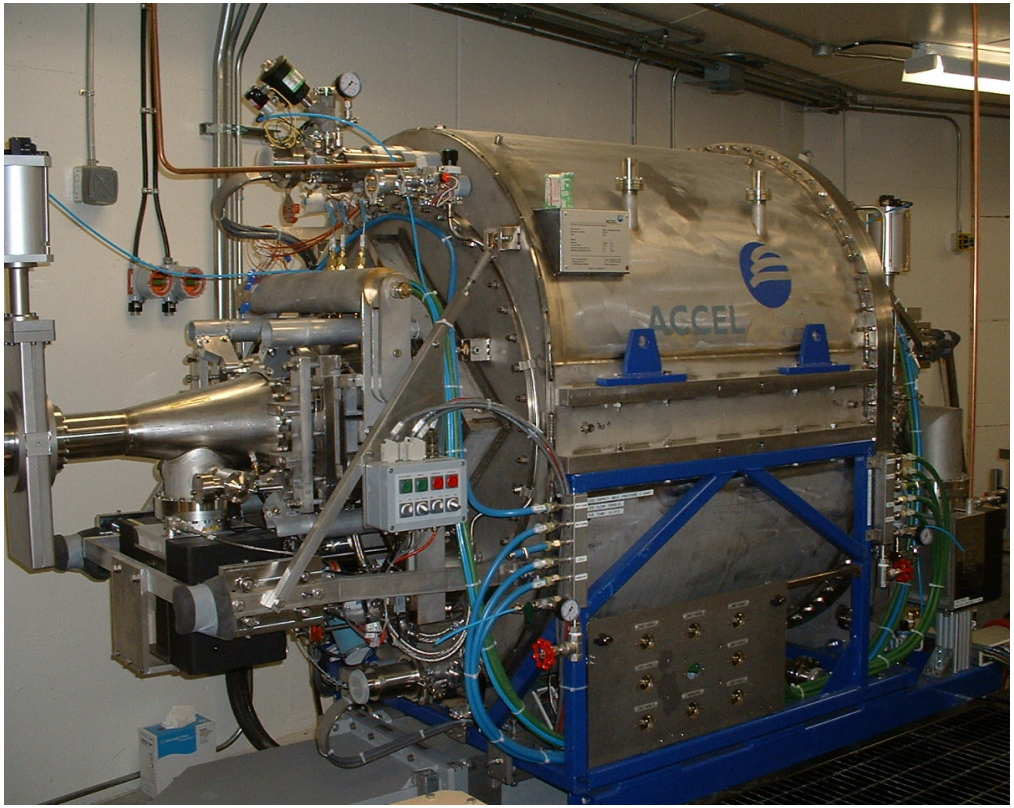

Image courtesy of Diamond Light Source Ltd

© Monroe Brothers Ltd 2012. Please do not reproduce without the permission of the author.

Large Scale Refrigeration Systems

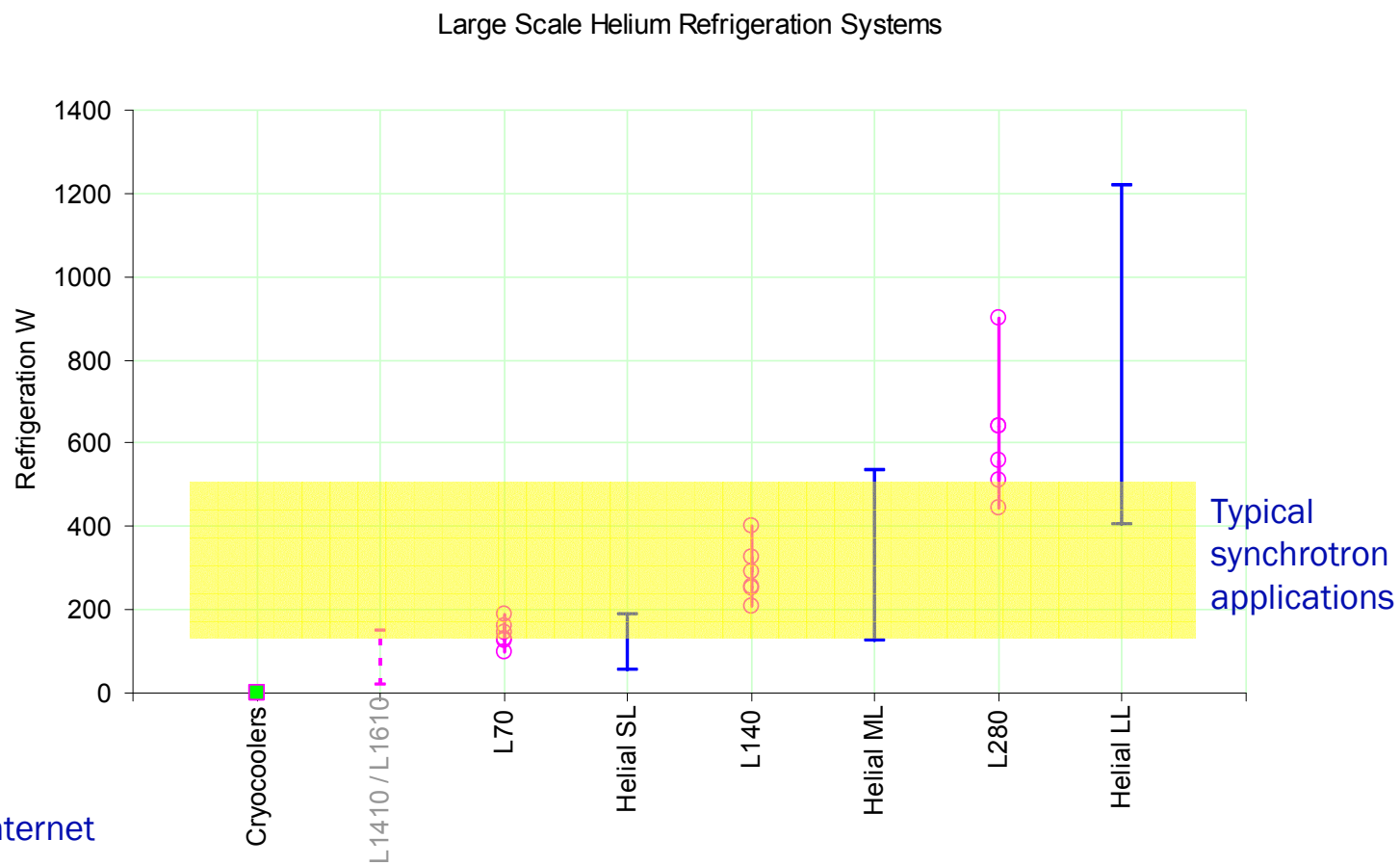

Data from the internet

Liquefaction duties factored to estimate the Refrigeration power

© Monroe Brothers Ltd 2012. Please do not reproduce without the permission of the author.

Costs

Populate the table below with numbers with the following words of caution.

Heat load Evaporation rate				
Bulk liquid helium				
Cryocoolers				
Electricity				
Electricity				
Maintenance				
Total				
Refrigerator				
Electricity				
Electricity				
Maintenance				
Total				

© Monroe Brothers Ltd 2012. Please do not reproduce without the permission of the author.

Costs

Populate the table below with numbers with the following words of caution.

Heat load	
Evaporation rate	
Bulk liquid helium	
Cryocoolers	
Electricity	
Electricity	
Maintenance	
Total	
Refrigerator	
Electricity	
Electricity	
Maintenance	
Total	

"People commonly use statistics like a drunk uses a lamp-post: for support rather than for illumination."

Mark Twain

© Monroe Brothers Ltd 2012. Please do not reproduce without the permission of the author.

Costs

	Superconducting RF Cavities (3 Cavities)			
Heat load Evaporation rate	350 W			
Bulk liquid helium	$ 7.50 per litre $ 30 million pa !			
Cryocoolers Electricity Electricity Maintenance Total				
Refrigerator Electricity Electricity Maintenance Total	$ 4 000 000 plus 200 kW $ 320 000 pa $ 80 000 pa $ 400 000 pa			
	Refrigerator			

© Monroe Brothers Ltd 2012. Please do not reproduce without the permission of the author.

Low Loss NMR Cryostat

Typical low loss cryostat for NMR spectroscopy

Image from the Internet

© Monroe Brothers Ltd 2012. Please do not reproduce without the permission of the author.

Low Loss NMR Cryostat

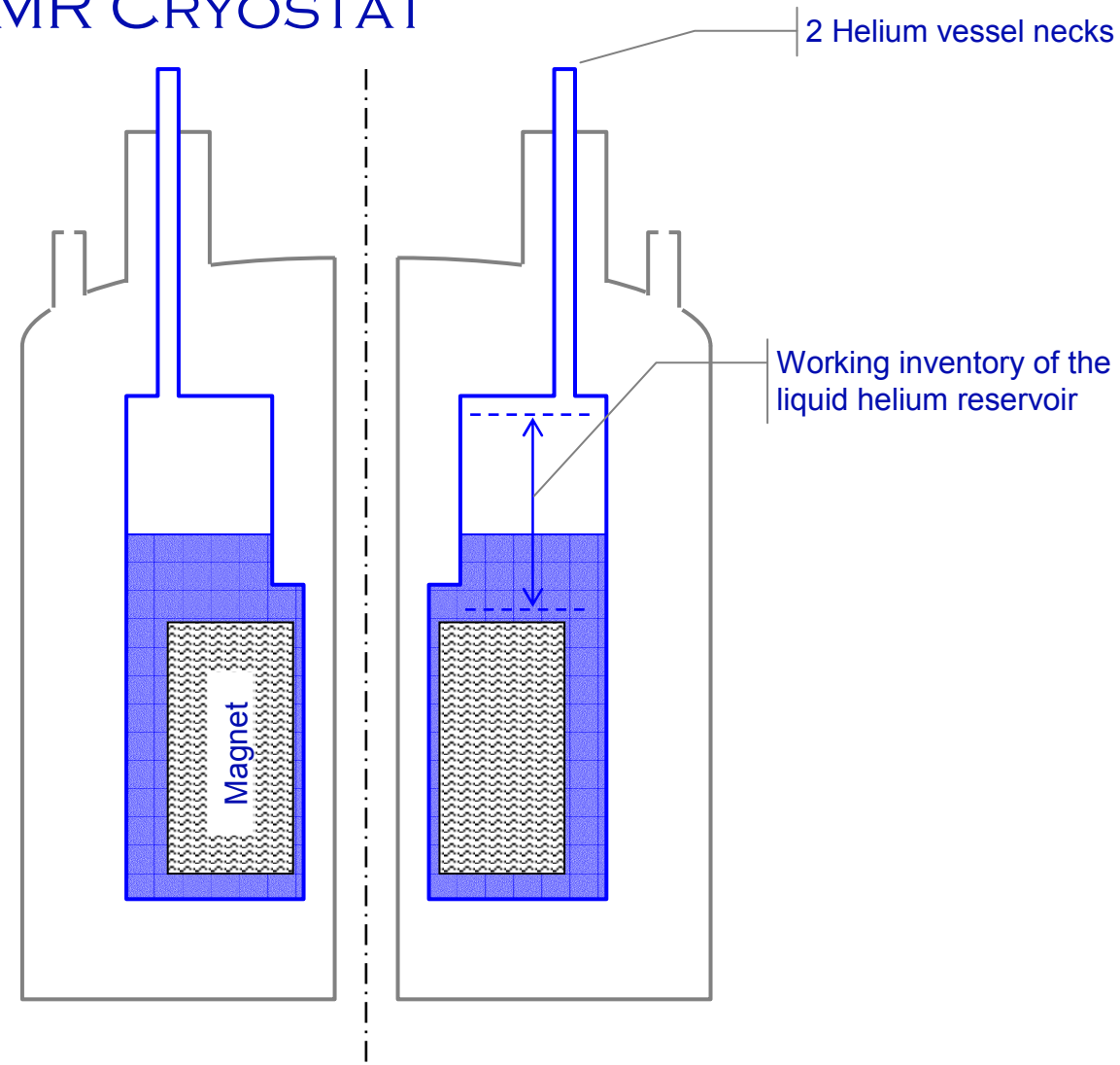

© Monroe Brothers Ltd 2012. Please do not reproduce without the permission of the author.

Low Loss NMR Cryostat

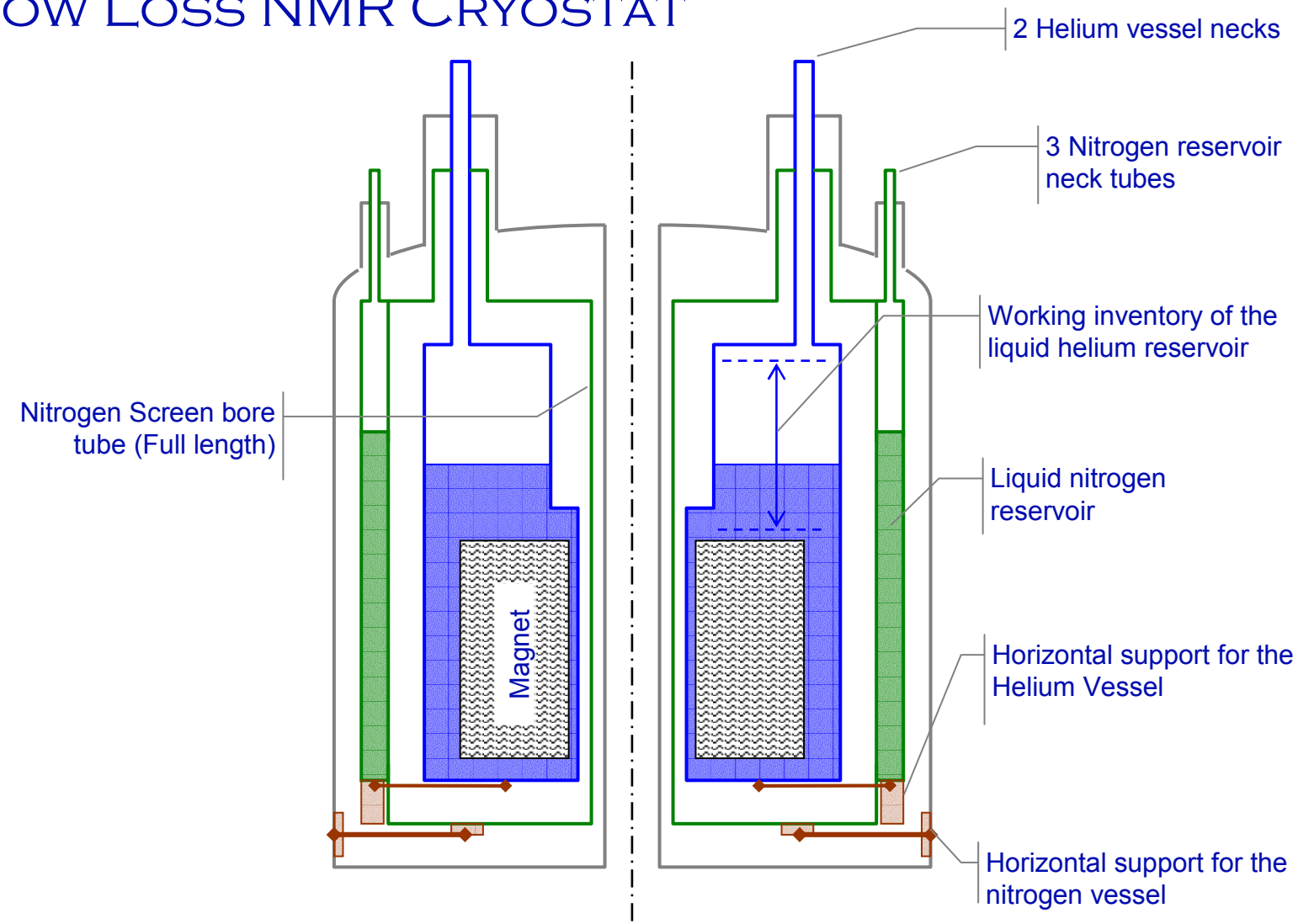

© Monroe Brothers Ltd 2012. Please do not reproduce without the permission of the author.

Low Loss NMR Cryostat

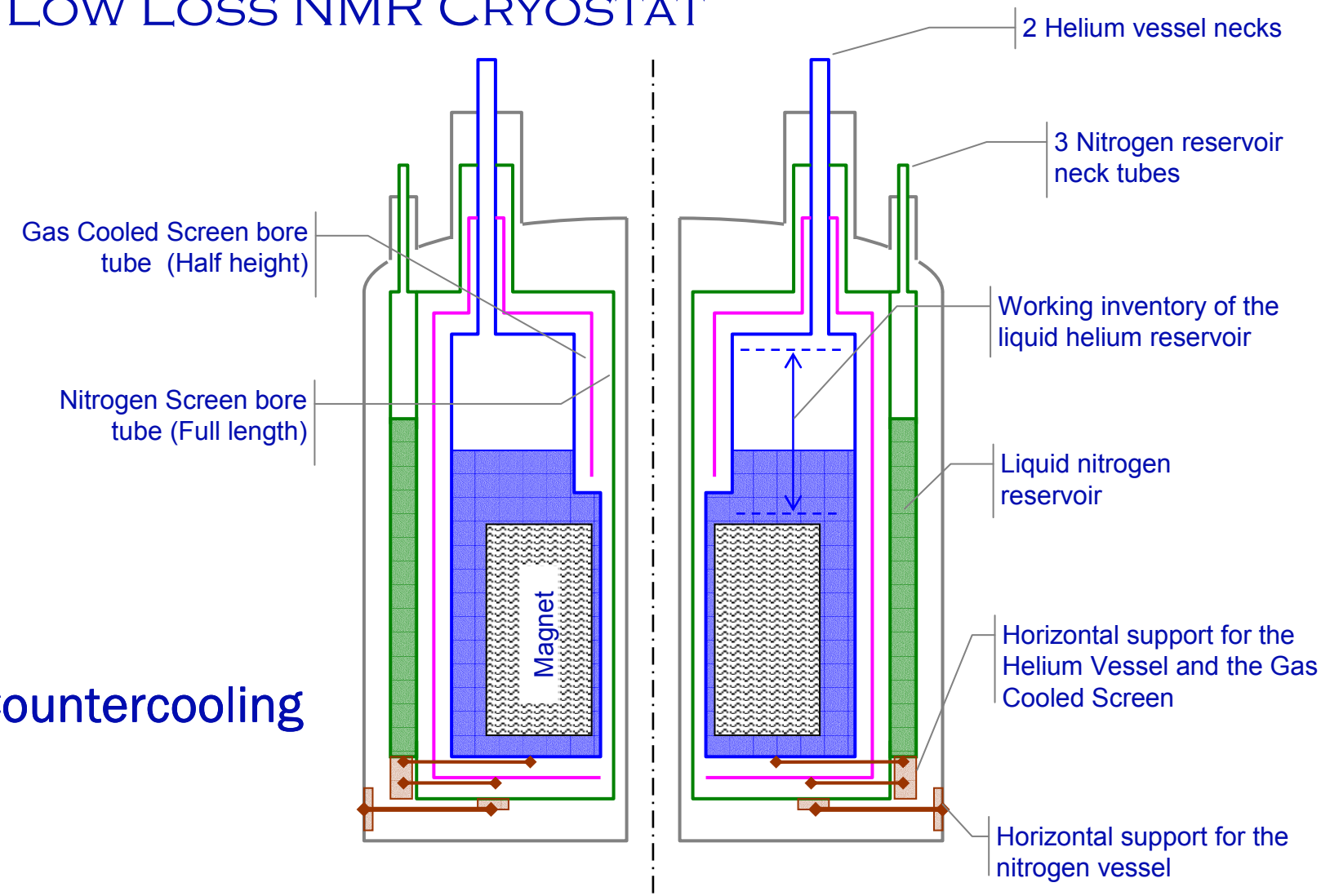

Countercooling

© Monroe Brothers Ltd 2012. Please do not reproduce without the permission of the author.

Low Loss NMR Cryostat

Extreme design

15 mW ≡ 22 cc / hr
190 litres pa

1 year hold time

Large NMR magnet

200 cc / hr
440 litres

3 months hold time

Image from the Internet

© Monroe Brothers Ltd 2012. Please do not reproduce without the permission of the author.

Costs

	Superconducting RF Cavities (3 Cavities)	Low Loss NMR Magnet Small	Low Loss NMR Magnet Large	
Heat load	350 W	15 mW	150 mW	
Evaporation rate		20 cc / hr	200 cc / hr	
Bulk liquid helium	$ 7.50 per litre	$ 30 per litre	$ 15 per litre	
	$ 30 million pa !	$ 5 000 pa	$ 26 000 pa	
Cryocoolers		$ 25 000	$ 45 000	
Electricity		4 kW	6.5 kW	
Electricity		$ 6 300 pa	$ 10 300 pa	
Maintenance		$ 10 000 pa	$ 13 500 pa	
Total		$ 16 000 pa	$ 24 000 pa	
Refrigerator	$ 4 000 000 plus			
Electricity	200 kW			
Electricity	$ 320 000 pa			
Maintenance	$ 80 000 pa			
Total	$ 400 000 pa			
	Refrigerator	Bulk	Bulk / Cryocoolers	
		Noise - Reliability of Supply		

© Monroe Brothers Ltd 2012. Please do not reproduce without the permission of the author.

Wiggler Magnet

- Four two stage cryocoolers

  2 radiation screens

  Recondensing helium

- 3 W at 4.2 K

Image courtesy of Diamond Light Source Ltd

© Monroe Brothers Ltd 2012. Please do not reproduce without the permission of the author.

Wiggler Magnet

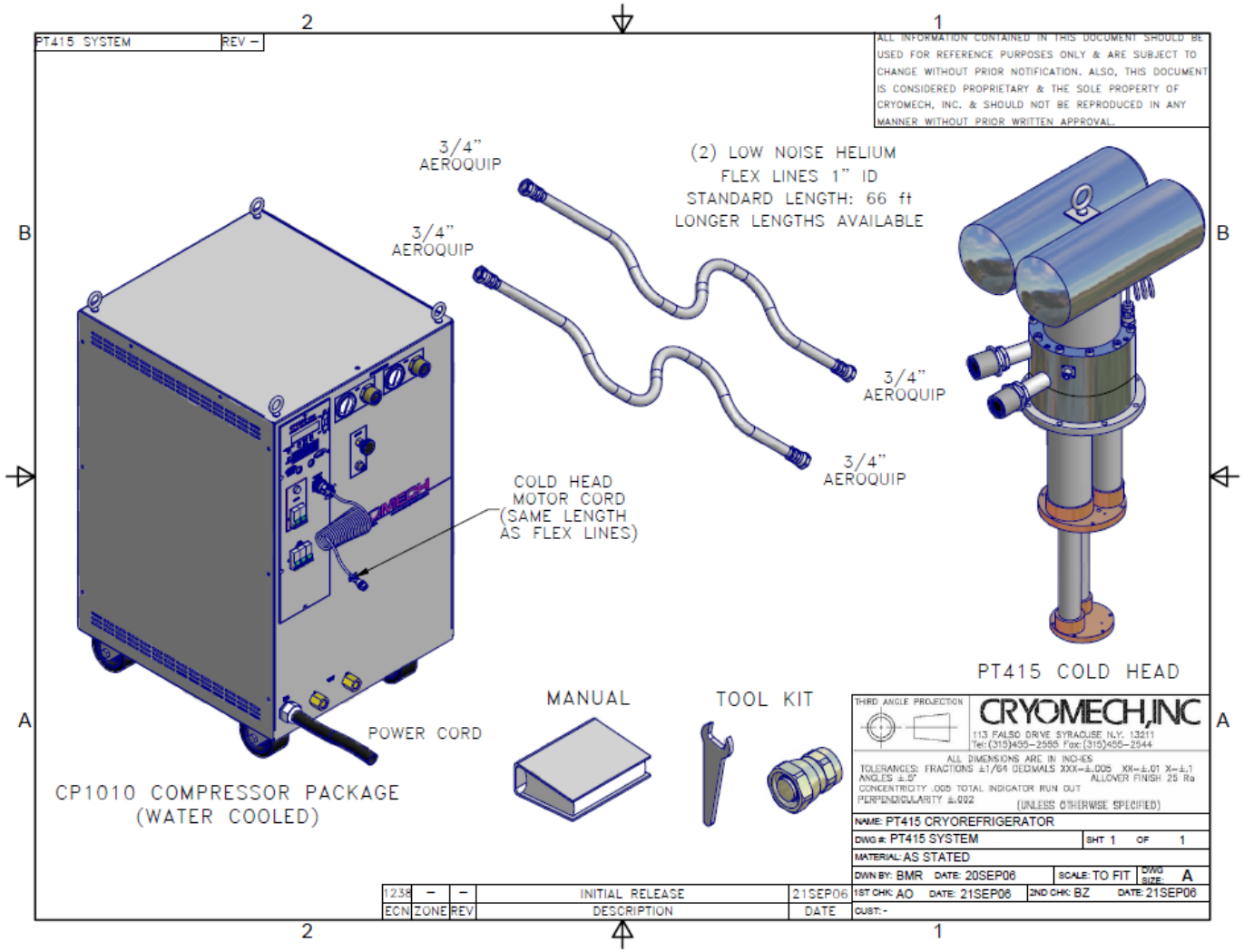

© Monroe Brothers Ltd 2012. Please do not reproduce without the permission of the author.

Wiggler Magnet

Cryocooler Design Principle:

Go for broke!

In other words if the heat loads are greater than the cryocooler cooling power then remedial work is VERY difficult.

The design has to minimise the heat loads without countercooling

Image courtesy of Diamond Light Source Ltd

© Monroe Brothers Ltd 2012. Please do not reproduce without the permission of the author.

Costs

	Superconducting RF Cavities (3 Cavities)	Low Loss NMR Magnet Small	Low Loss NMR Magnet Large	Wiggler Magnet
Heat load	350 W	15 mW	150 mW	3 W
Evaporation rate		20 cc / hr	200 cc / hr	4 300 cc / h
Bulk liquid helium	$ 7.50 per litre	$ 30 per litre	$ 15 per litre	$ 7.50 per litre
	$ 30 million pa !	$ 5 700 pa	$ 26 000 pa	$ 280 000 pa ⇓
Cryocoolers		$ 30 000	$ 50 000	$ 180 000
Electricity		4 kW	6.5 kW	26 kW
Electricity		$ 6 300 pa	$ 10 200 pa	$ 41 000 pa
Maintenance		$ 10 000 pa	$ 13 500 pa	$ 46 000 pa
Total		$ 16 000 pa	$ 24 000 pa	$ 90 000 pa
Refrigerator	$ 4 000 000 plus			Transfer lines $ 200 000
Electricity	200 kW			
Electricity	$ 320 000 pa			
Maintenance	$ 80 000 pa			
Total	$ 400 000 pa			$ 50 000 pa
	Refrigerator	Bulk	Bulk / Cryocoolers	Cryocoolers (Refrigerator)
		Noise - Reliability of Supply		

© Monroe Brothers Ltd 2012. Please do not reproduce without the permission of the author.

Costs

	Cryocooler 1 W to 1.5 W	Helium Refrigerator 500 W	Bulk Cryogens
Equipment	$ 40 k to $ 65 k	$ 2 M to $ 4 M	
Operating costs	$ 25 k pa	$ 700 k pa	
Unit Costs			
- equipment	$ 50 k per W	$ 5 k per W	
- refrigeration	$ 15 k pa per W	$ 2 k to $ 4 k pa per W	$ 100 k to $ 200 k pa per W
Unit Costs			
- equipment		$ 20 k per l / hr	
- liquefaction		$ 0.50 to $ 2.00 per litre	$ 10 to $ 20 per litre
Observations	Convenient Vibration	High Fixed Cost Expertise Infrastructure	Simple Low loss cryostats (No inherent heating)

Indicative figures for installed costs
Depends on marginal costing

© Monroe Brothers Ltd 2012. Please do not reproduce without the permission of the author.

Finish

© Monroe Brothers Ltd 2012. Please do not reproduce without the permission of the author.

Introduction

⇨ Introduction	- Monroe Brothers Ltd - Structure of the talk
⇨ Principles of Refrigeration	- Carnot efficiency - Real Efficiency - Costs
⇨ **Refrigeration Systems**	**- Main components** **- Cold Box operation**
⇨ Superconducting RF cavities	- Cooling requirements - Valve Box & transfer lines - Control
⇨ Other Cooling Requirements	- Cryocoolers - Economics versus practicalities

© Monroe Brothers Ltd 2012. Please do not reproduce without the permission of the author.

Helium Liquefiers

Diamond Light Source Ltd

© Monroe Brothers Ltd 2012. Please do not reproduce without the permission of the author.

Basic Principles

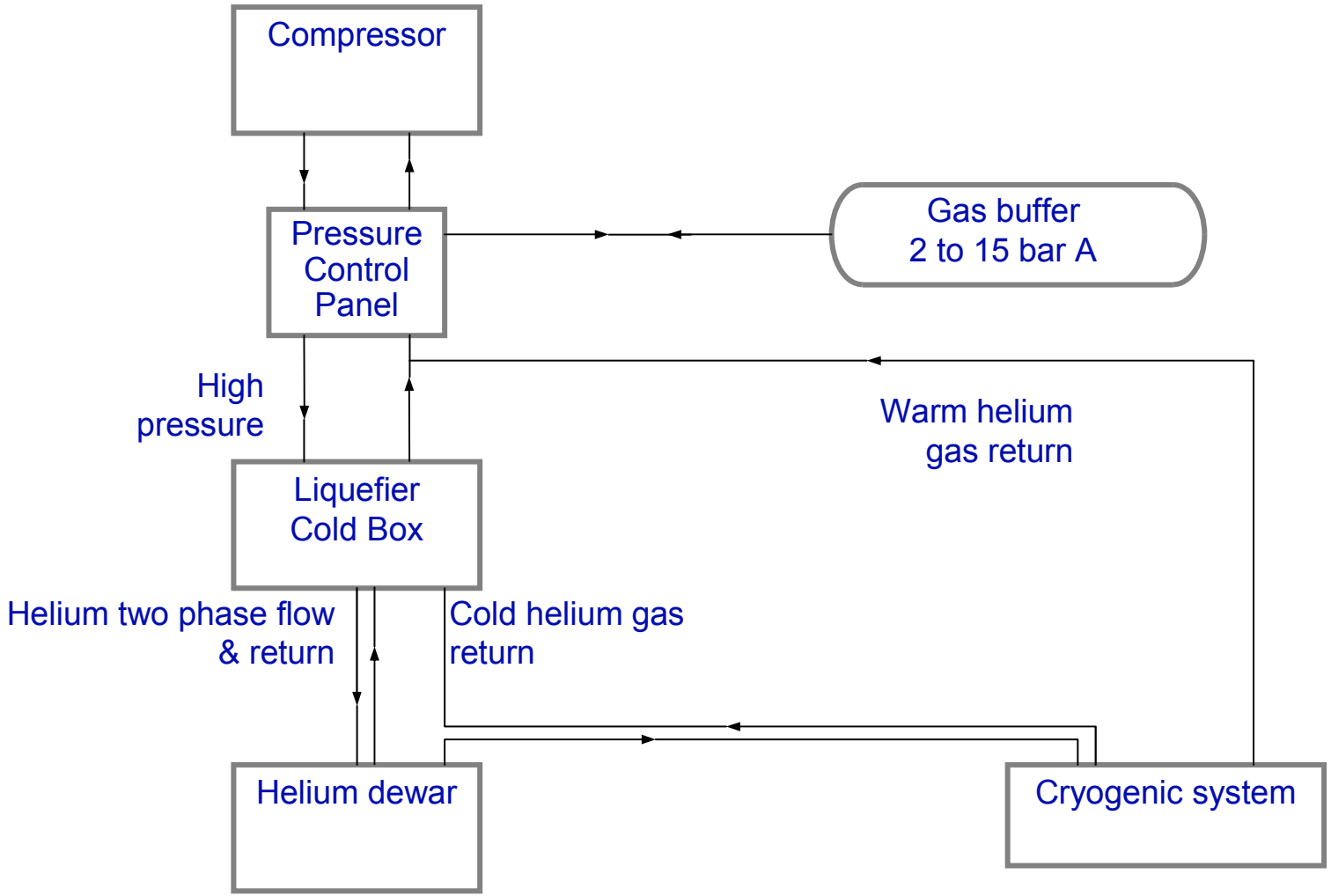

© Monroe Brothers Ltd 2012. Please do not reproduce without the permission of the author.

REFRIGERATION AT 4K ~ 100 W

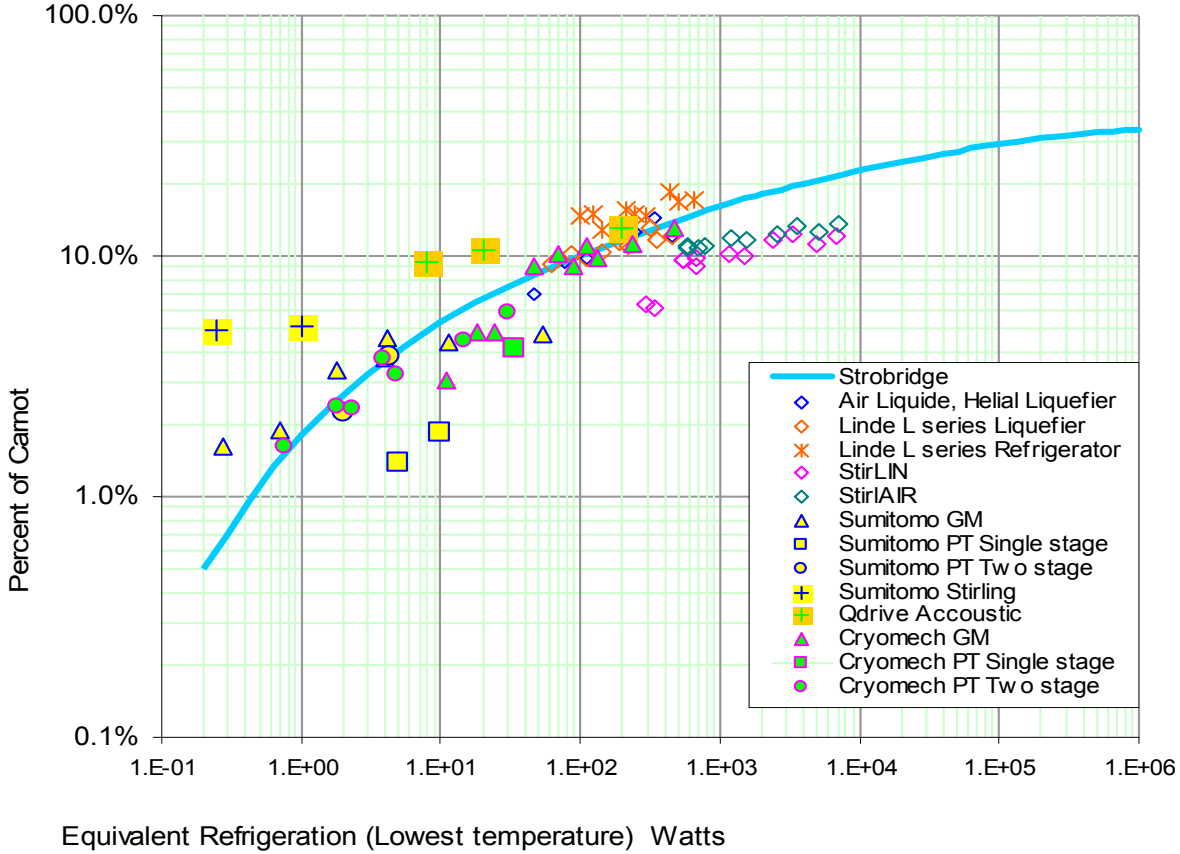

Strobridge Plot

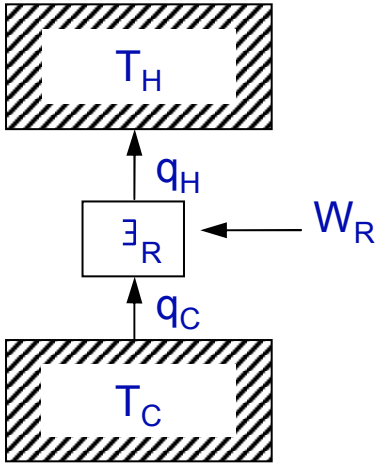

$$COP = \frac{q_C}{W_R} = \frac{T_C}{T_H - T_C}$$

$$\frac{1}{COP_{Ideal}} = \frac{W_R}{q_C} = 67$$

$$\frac{1}{COP_{Real}} = \frac{W_R}{q_C} = 300 \rightarrow 700$$

© Monroe Brothers Ltd 2012. Please do not reproduce without the permission of the author.

REFRIGERATION AT 4 K

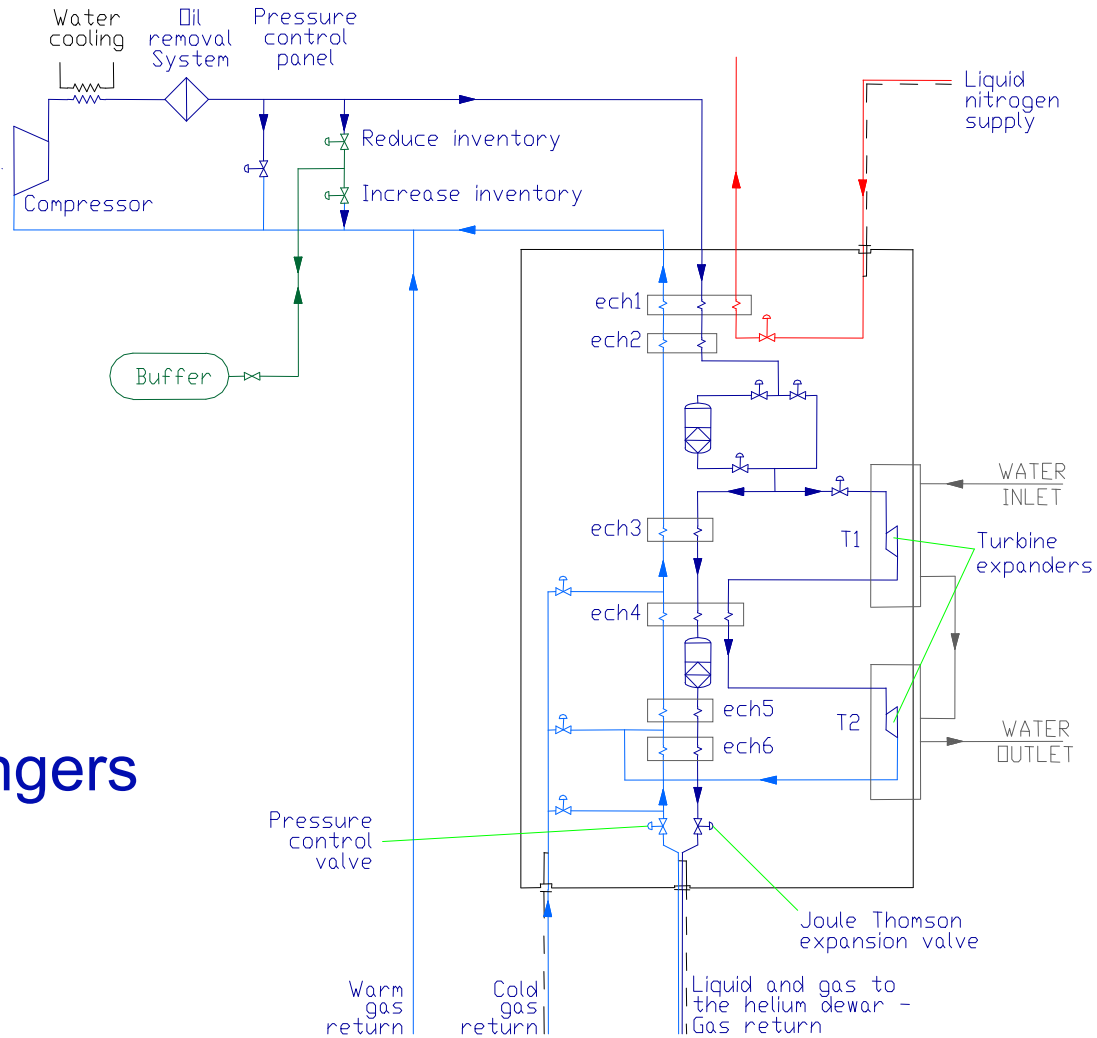

Compression

Turbine expansion

Joule Thomson

Efficient heat exchangers

© Monroe Brothers Ltd 2012. Please do not reproduce without the permission of the author.

Refrigeration at 4 K

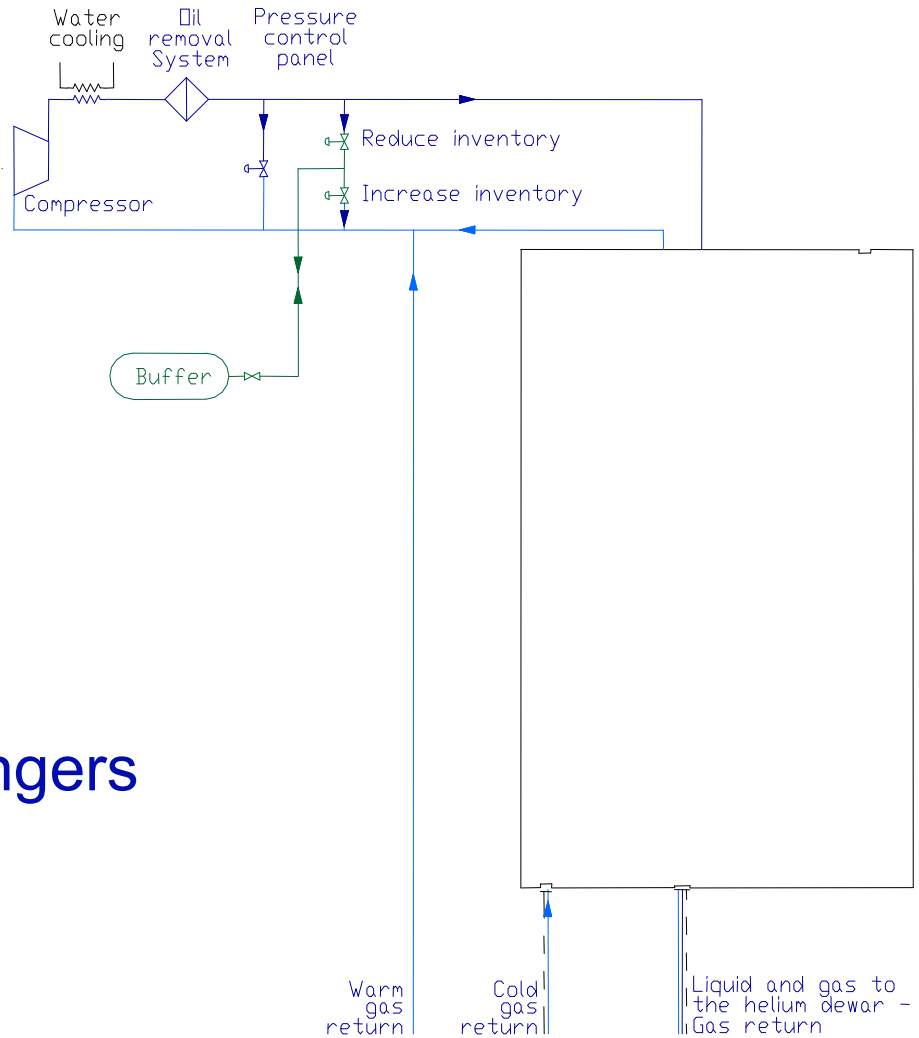

Compression

Turbine expansion

Joule Thomson

Efficient heat exchangers

© Monroe Brothers Ltd 2012. Please do not reproduce without the permission of the author.

Refrigeration at 4 K

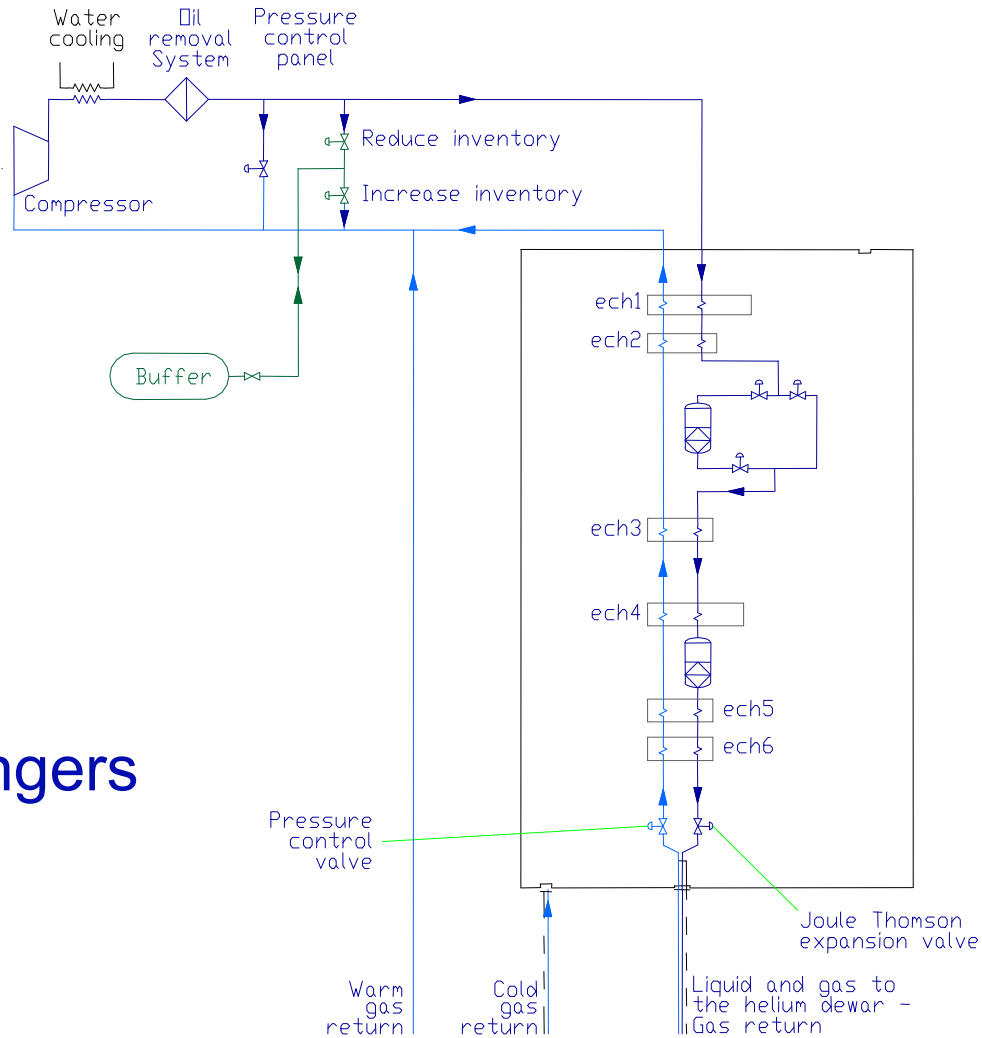

Compression

Turbine expansion

Joule Thomson

Efficient heat exchangers

© Monroe Brothers Ltd 2012. Please do not reproduce without the permission of the author.

REFRIGERATION AT 4 K

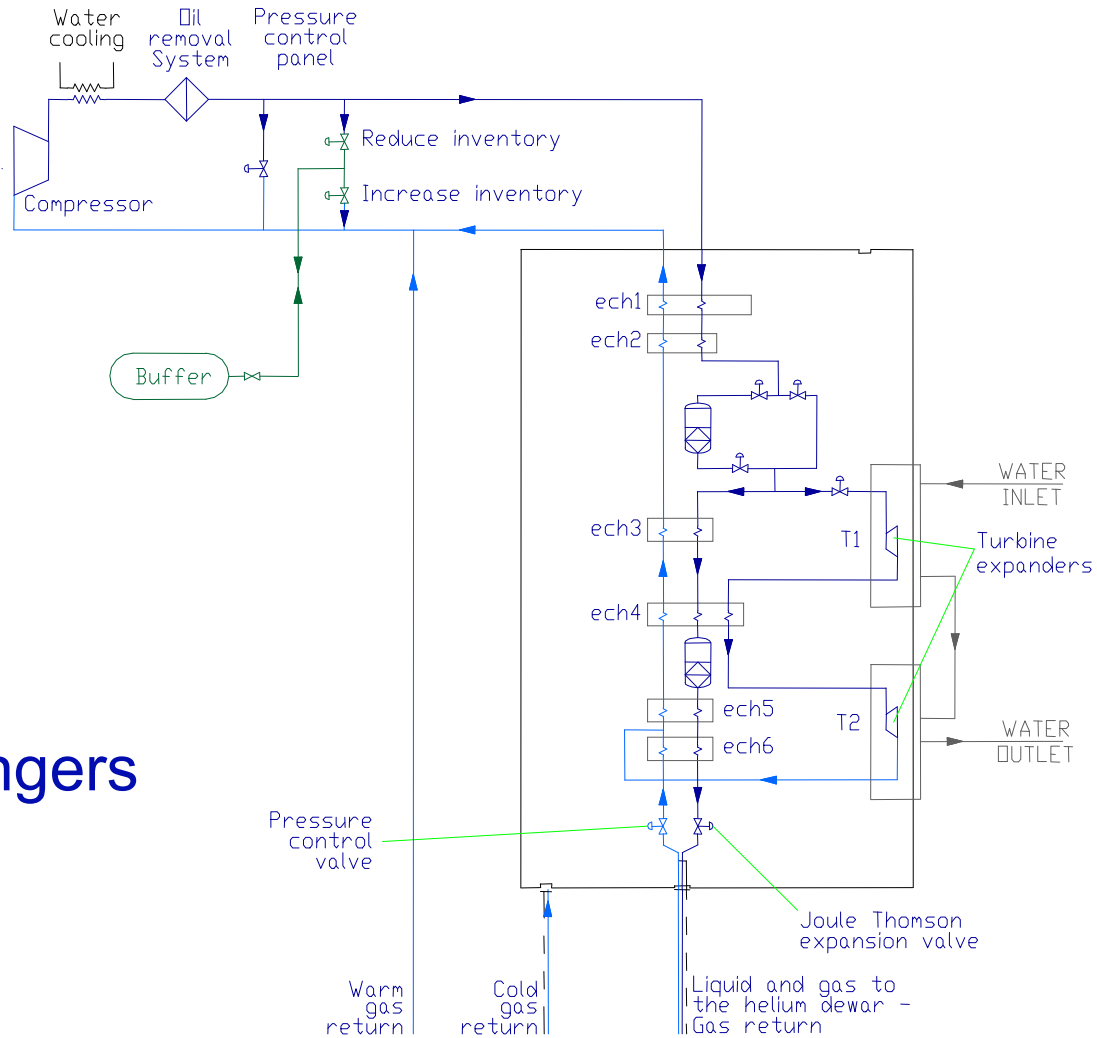

Compression

Turbine expansion

Joule Thomson

Efficient heat exchangers

© Monroe Brothers Ltd 2012. Please do not reproduce without the permission of the author.

REFRIGERATION AT 4 K

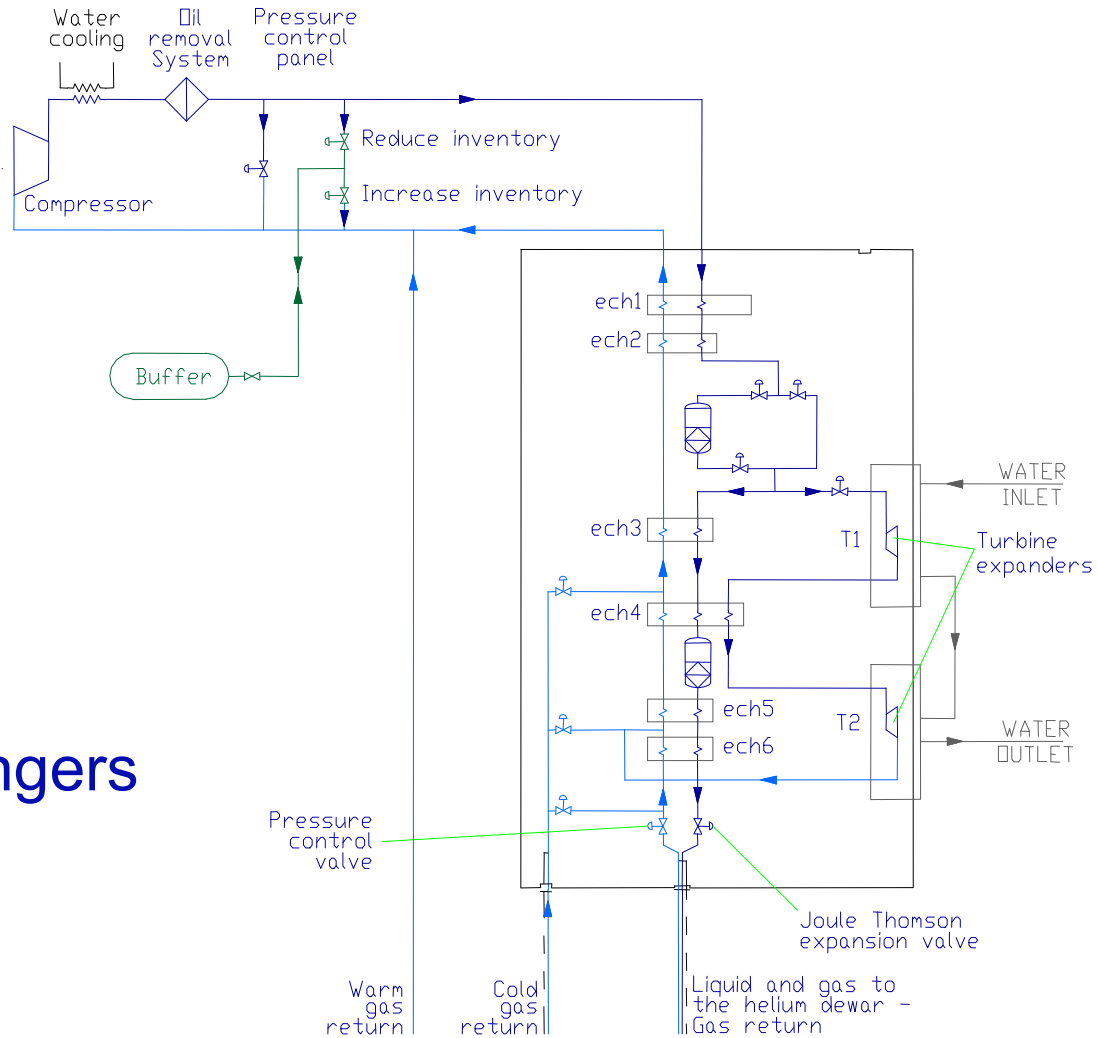

Compression

Turbine expansion

Joule Thomson

Efficient heat exchangers

© Monroe Brothers Ltd 2012. Please do not reproduce without the permission of the author.

REFRIGERATION AT 4 K

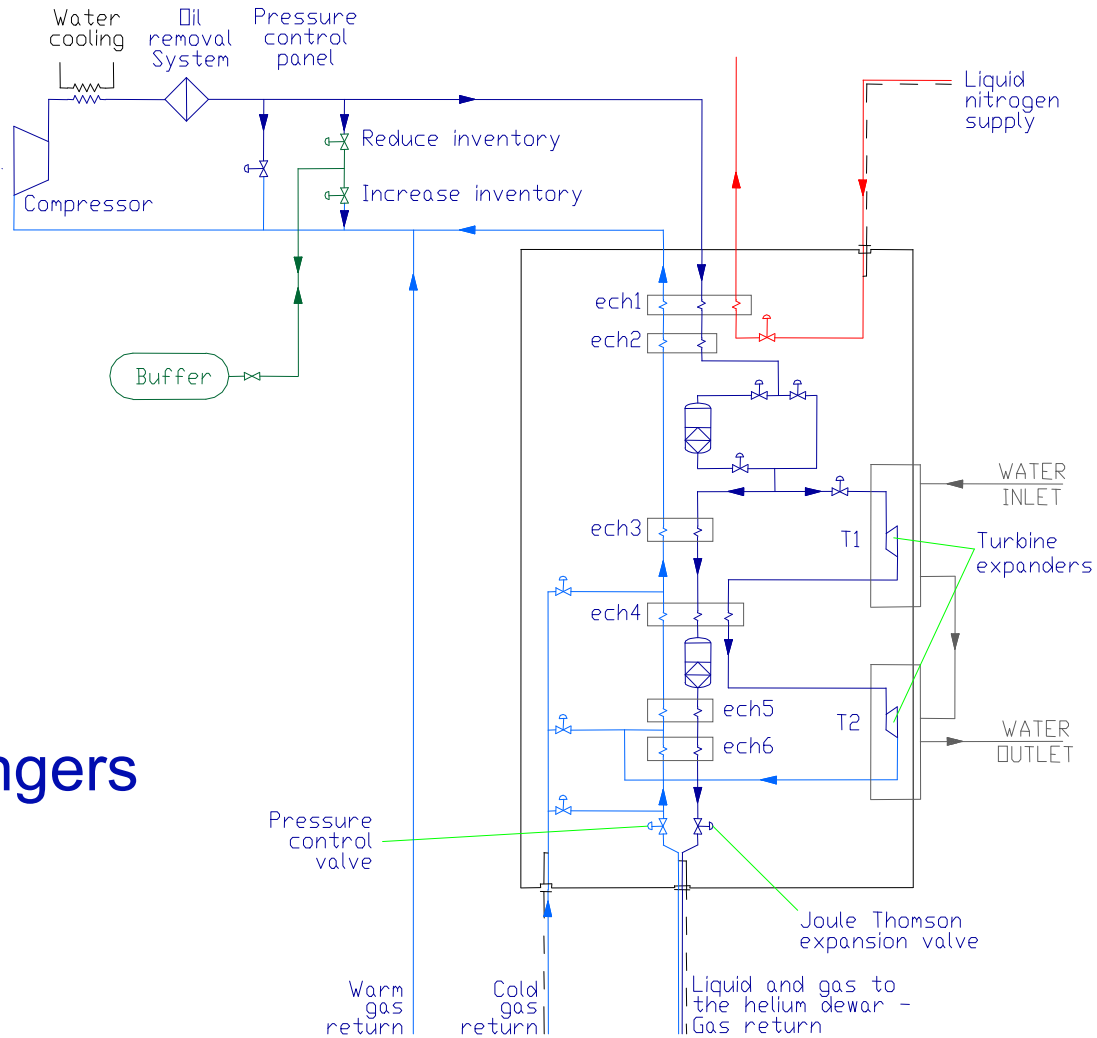

Compression

Turbine expansion

Joule Thomson

Efficient heat exchangers

© Monroe Brothers Ltd 2012. Please do not reproduce without the permission of the author.

Turbine Expansion

- Valve
  Isenthalpic
  Constant enthalpy
- Ideal Turbine
  Isentropic
  Constant entropy

© Monroe Brothers Ltd 2012. Please do not reproduce without the permission of the author.

Turbine Expansion

- Valve
  Isenthalpic
  Constant enthalpy
- Ideal Turbine
  Isentropic
  Constant entropy

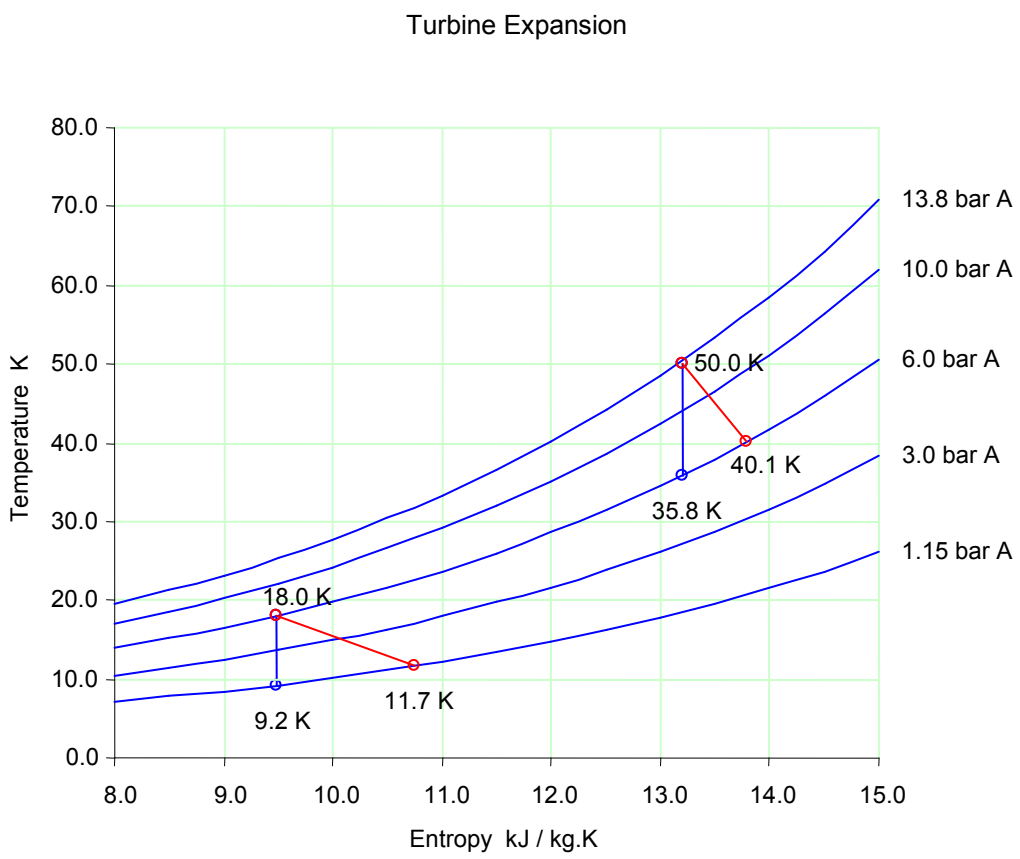

© Monroe Brothers Ltd 2012. Please do not reproduce without the permission of the author.

Refrigeration at 4 K

- Turbine expansion
  - Temperature drop from to 50.0 K to 40.1 K 9.9 K
  - Temperature drop from to 18.0 K to 11.7 K 6.3 K

Compared to a total drop from 300 K to 4 K

© Monroe Brothers Ltd 2012. Please do not reproduce without the permission of the author.

REFRIGERATION AT 4 K

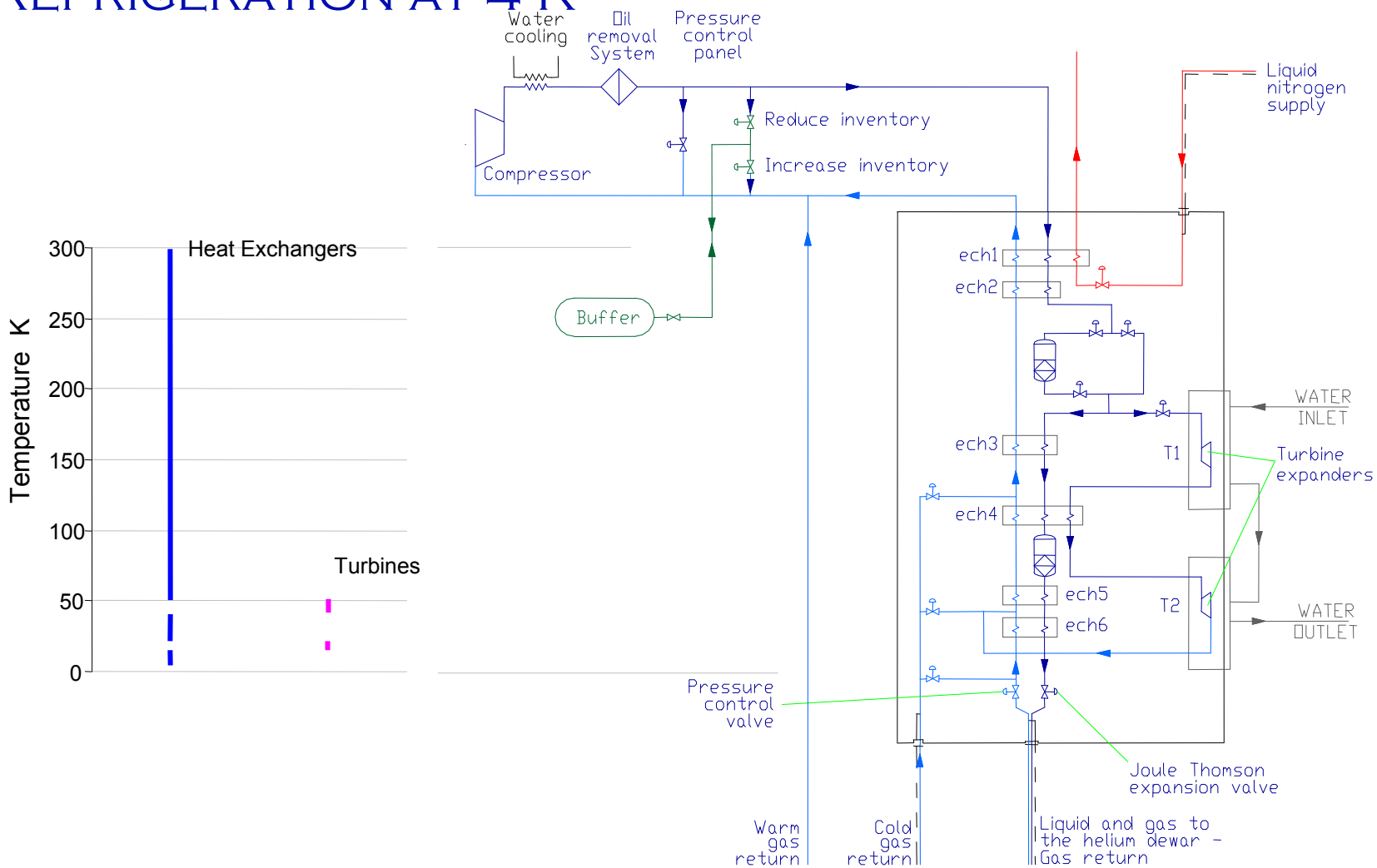

© Monroe Brothers Ltd 2012. Please do not reproduce without the permission of the author.

Refrigeration at 4 K

- Turbine expansion
  - Temperature drop from to 50.0 K to 40.1 K 9.9 K
  - Temperature drop from to 18.0 K to 11.7 K 6.3 K

  Compared to a total drop from 300 K to 4 K

- Joule Thompson expansion
  - High pressure gas at 13.8 bar A and 5 K
  - Expansion to 1.3 bar A 4.5 K 63% liquid & 37% vapour

© Monroe Brothers Ltd 2012. Please do not reproduce without the permission of the author.

Refrigeration at 4 K

- Joule Thompson Expansion

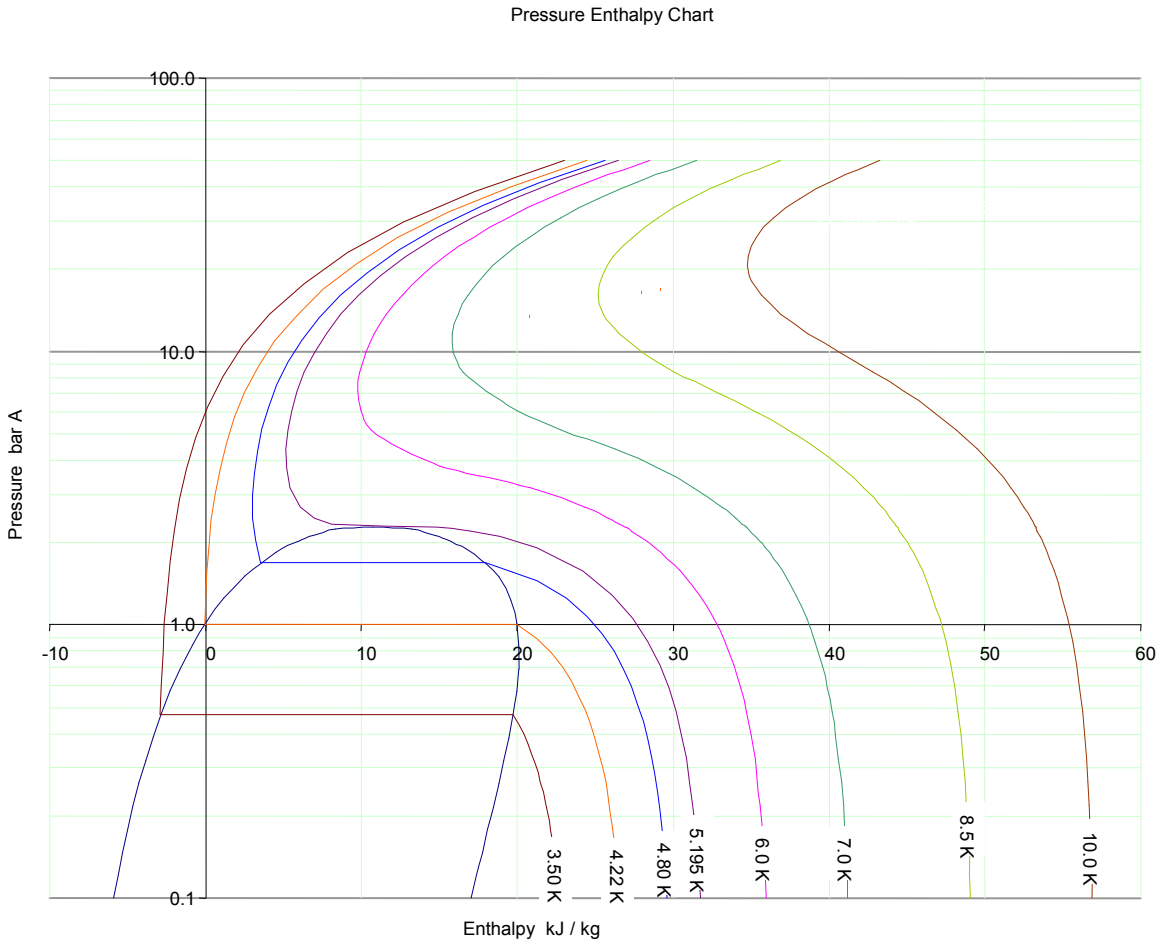

© Monroe Brothers Ltd 2012. Please do not reproduce without the permission of the author.

Refrigeration at 4 K

- Joule Thompson Expansion

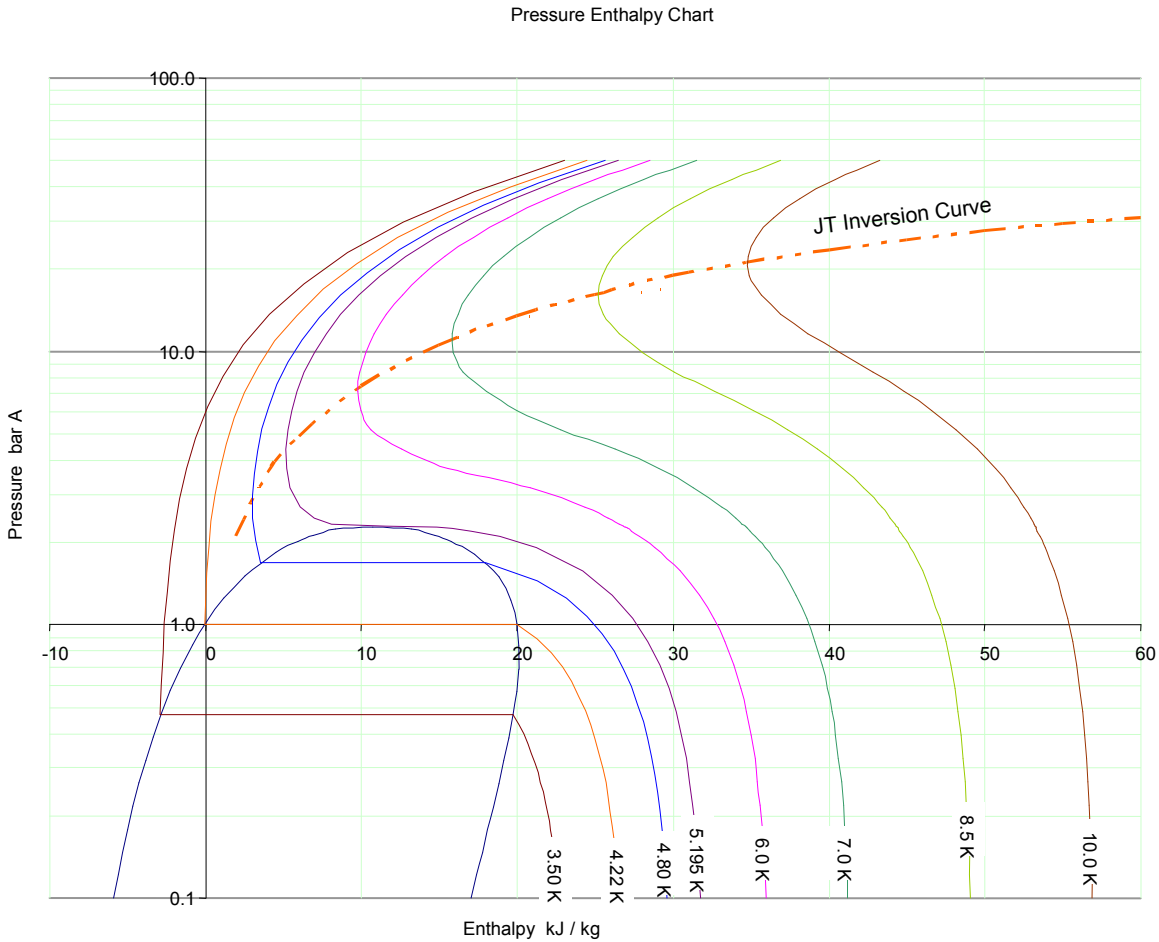

© Monroe Brothers Ltd 2012. Please do not reproduce without the permission of the author.

Refrigeration at 4 K

- Joule Thompson Expansion

5.0 K & 13.8 bar A
to
1.3 bar A (4.5 K)

37.2 % vapour&
62.8 % liquid

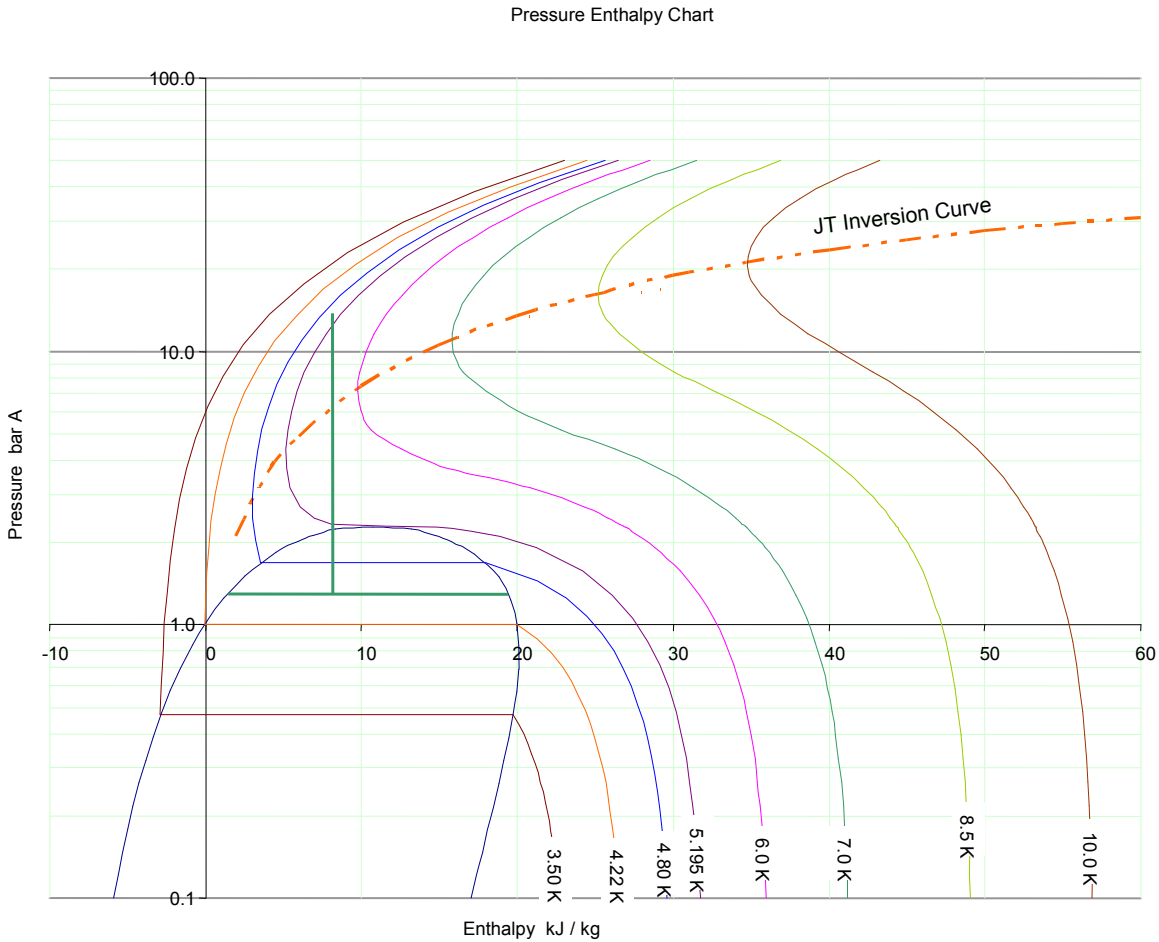

© Monroe Brothers Ltd 2012. Please do not reproduce without the permission of the author.

REFRIGERATION AT 4 K

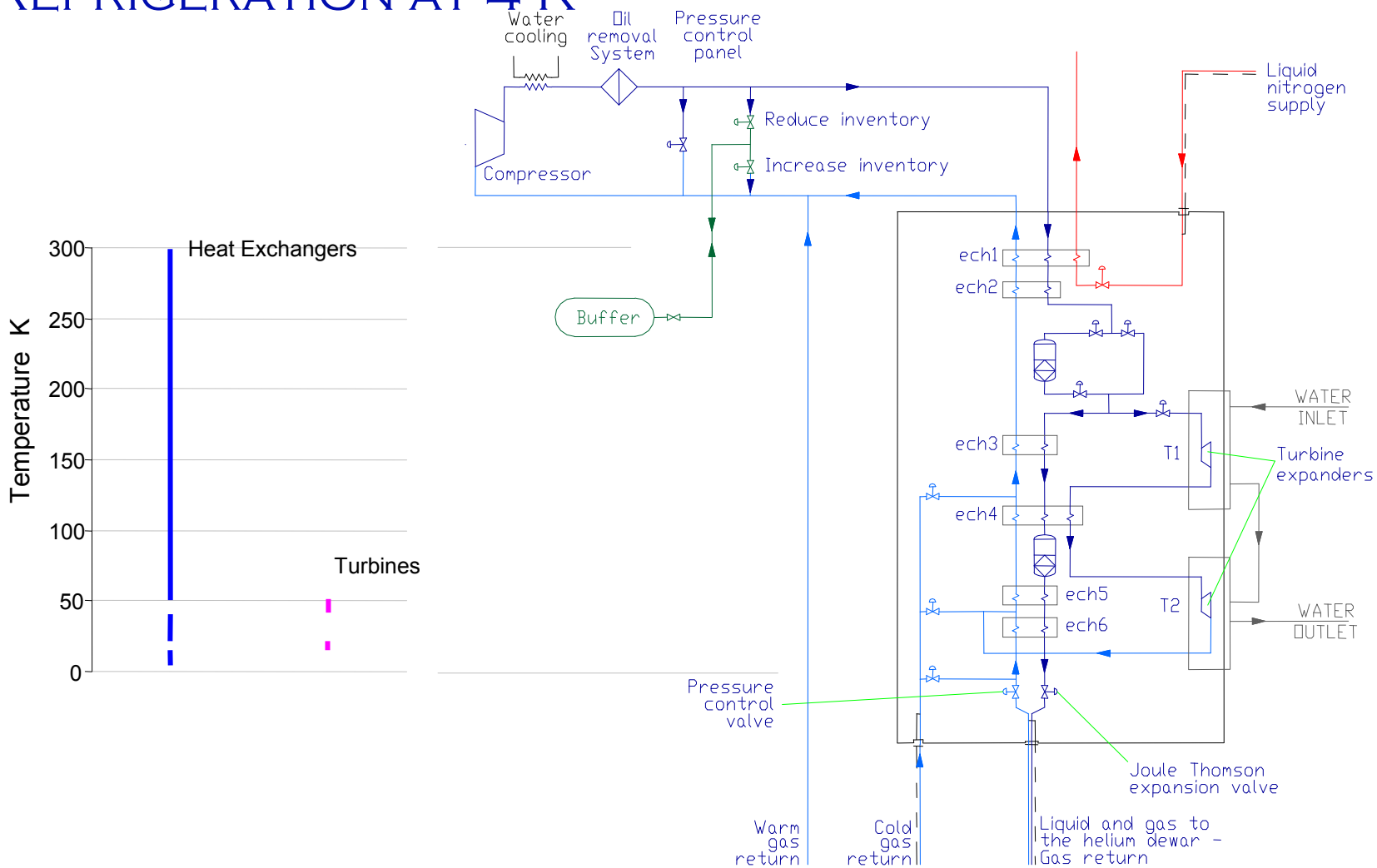

© Monroe Brothers Ltd 2012. Please do not reproduce without the permission of the author.

Refrigeration at 4 K

Notes

11

The impact of a 100 W heat load on the vapour return line

5.6 K & 14.0 bar A
to
1.3 bar A (4.5 K)

~~37.2 % vapour&~~
~~62.8 % liquid~~

46.9 % vapour&
53.1 % liquid

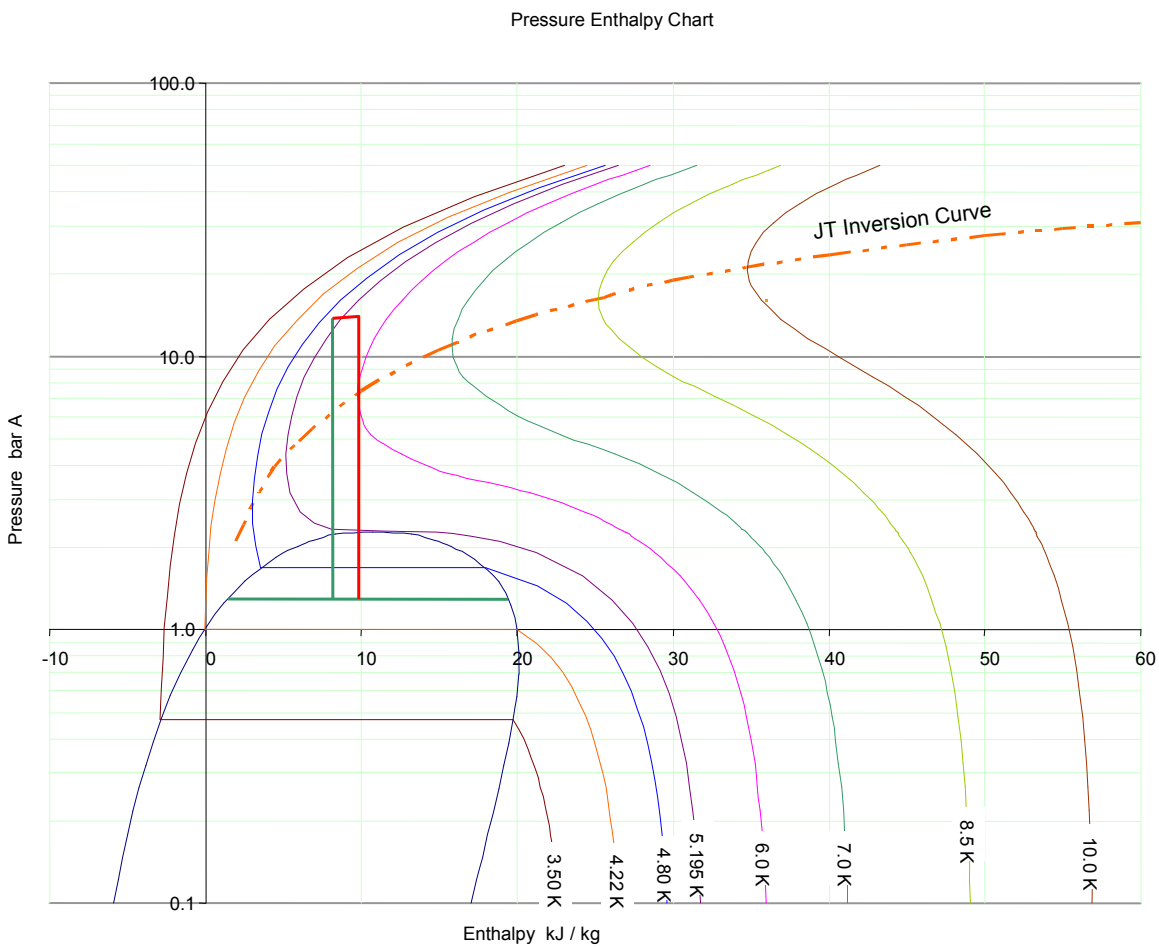

© Monroe Brothers Ltd 2012. Please do not reproduce without the permission of the author.

Refrigeration & Liquefaction

- Refrigeration - Gas returned cold Watts
- Liquefaction - Gas returned warmed Liquid litres per hour

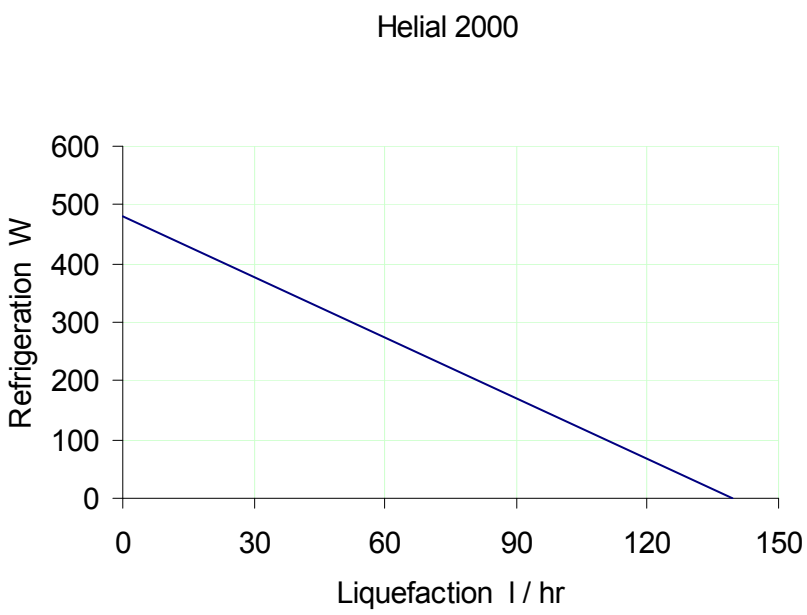

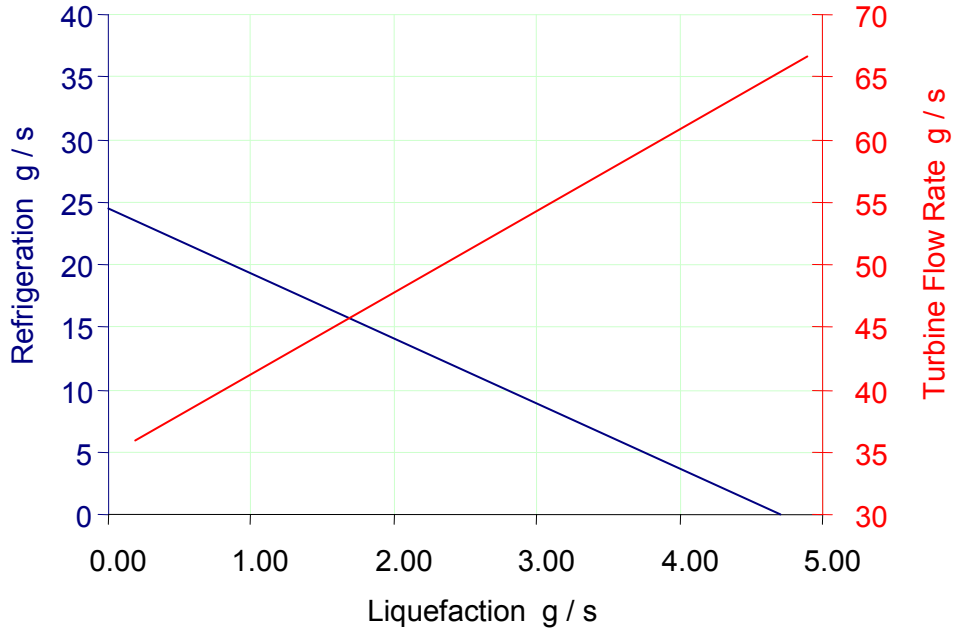

© Monroe Brothers Ltd 2012. Please do not reproduce without the permission of the author.

Pressure Control Panel

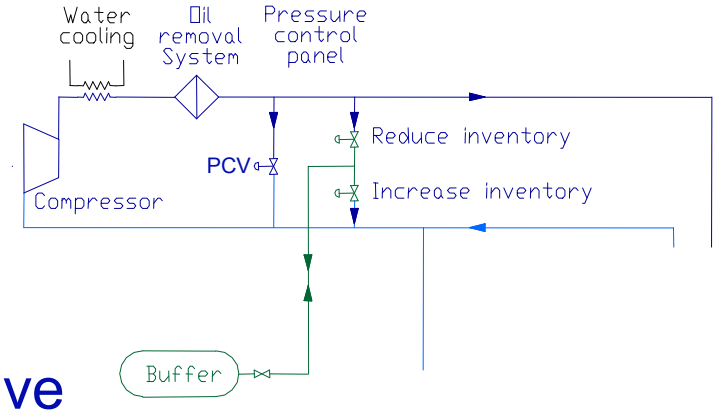

- PCV
  Differential pressure control valve
  Holds the HP line at 15 bar above the LP line
- Increase Inventory
  Absolute pressure control valve
  Holds the LP line at 1.05 bar by drawing gas from the buffer tank
- Reduce Inventory
  Absolute pressure control valve
  Vents gas from the HP line when the LP line is high

© Monroe Brothers Ltd 2012. Please do not reproduce without the permission of the author.

THIRD TURBINE

- ⇨ Follow the lines of constant entropy

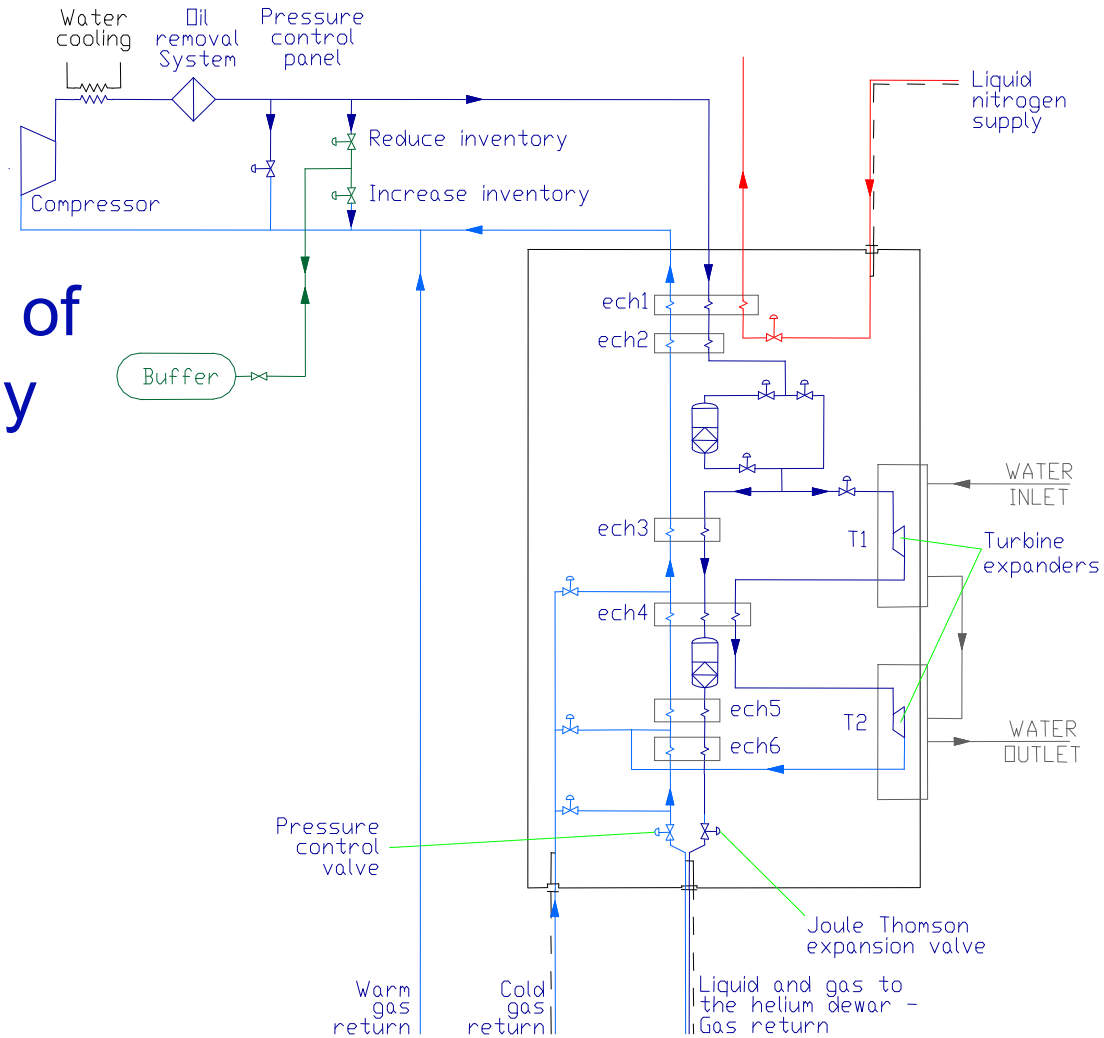

© Monroe Brothers Ltd 2012. Please do not reproduce without the permission of the author.

Third Turbine

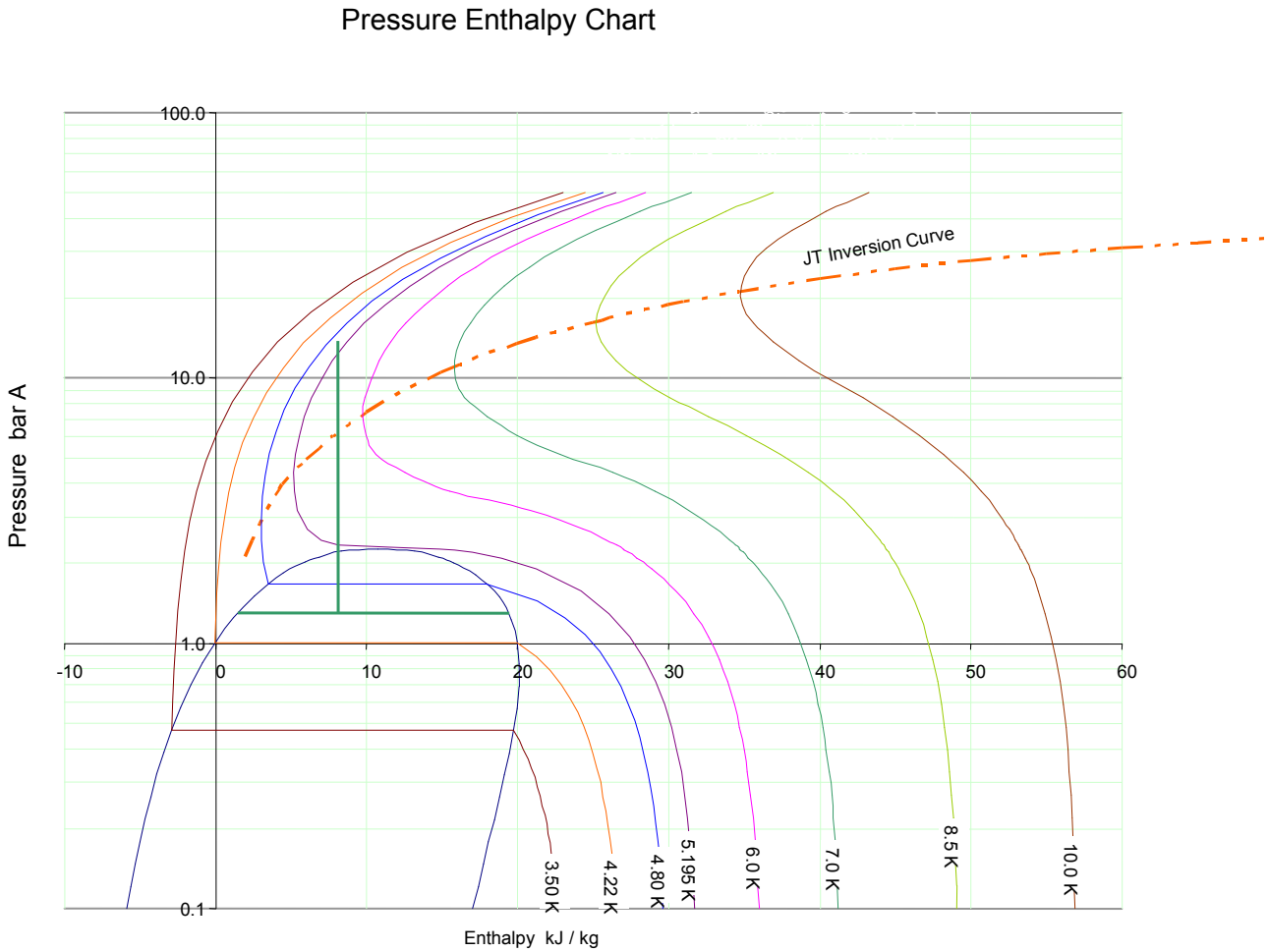

© Monroe Brothers Ltd 2012. Please do not reproduce without the permission of the author.

Third Turbine

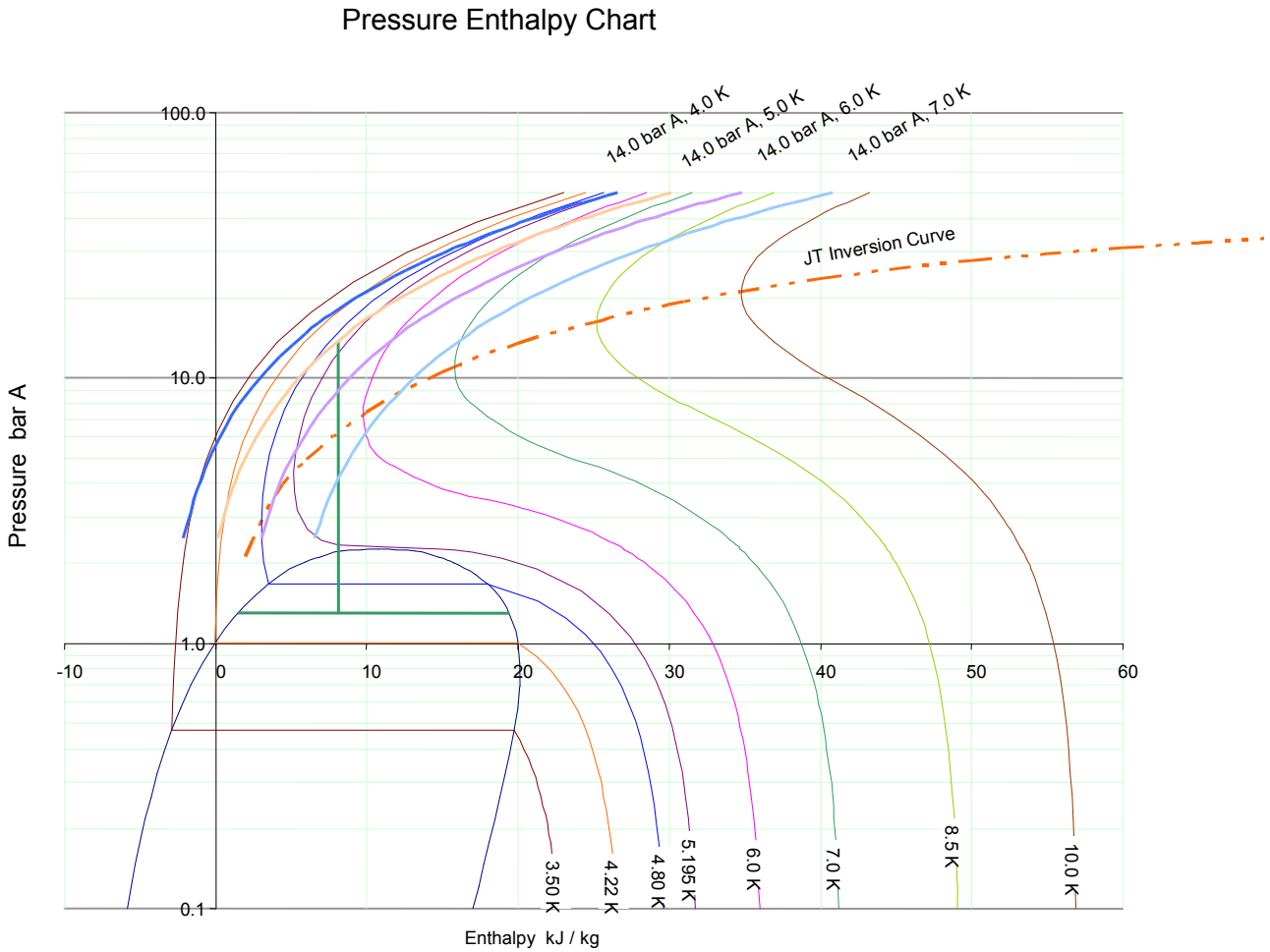

© Monroe Brothers Ltd 2012. Please do not reproduce without the permission of the author.

THIRD TURBINE

- Follow the lines of constant entropy
- Install a turbine before the JT valve

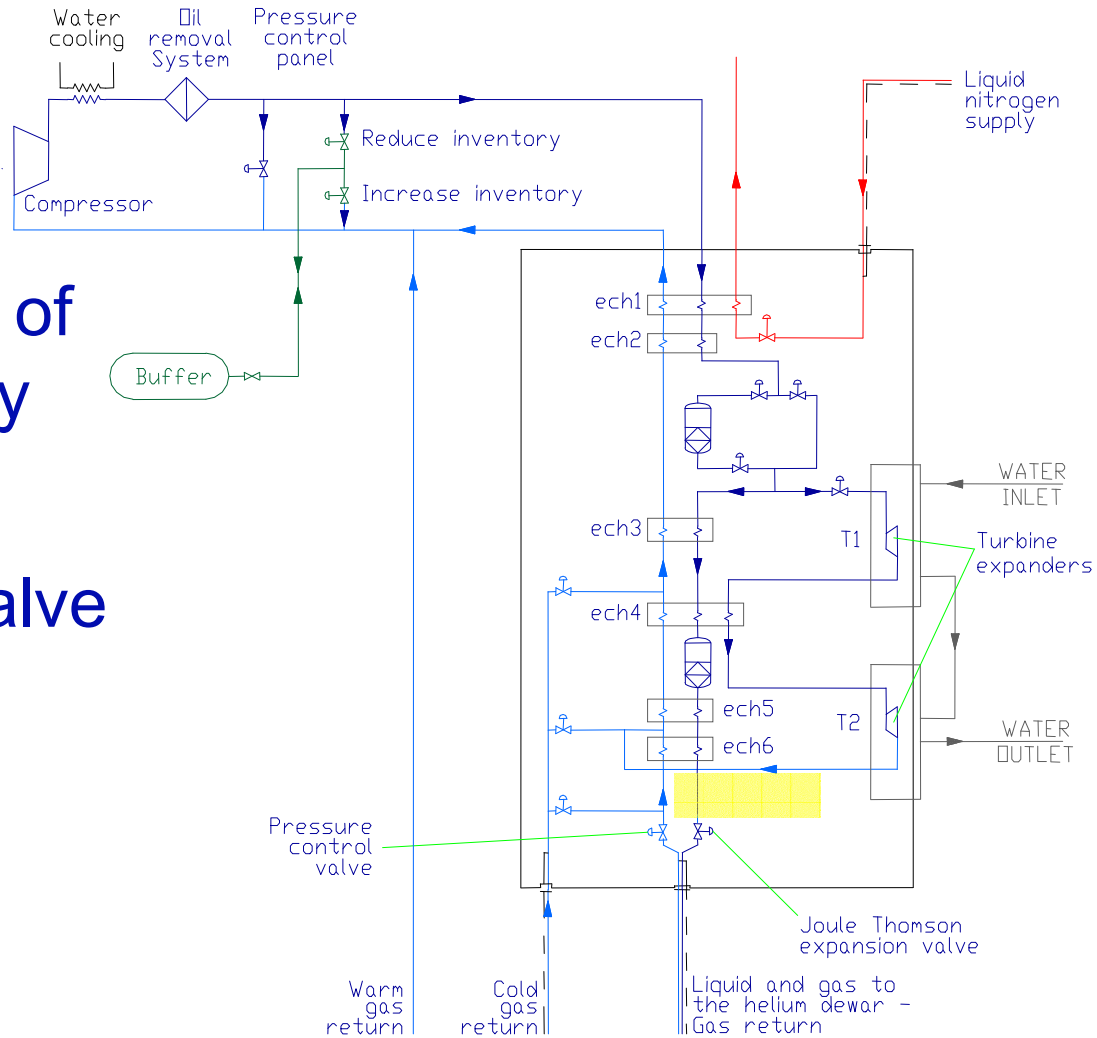

© Monroe Brothers Ltd 2012. Please do not reproduce without the permission of the author.

THIRD TURBINE

Notes

15

- Follow the lines of constant entropy
- Install a turbine before the JT valve

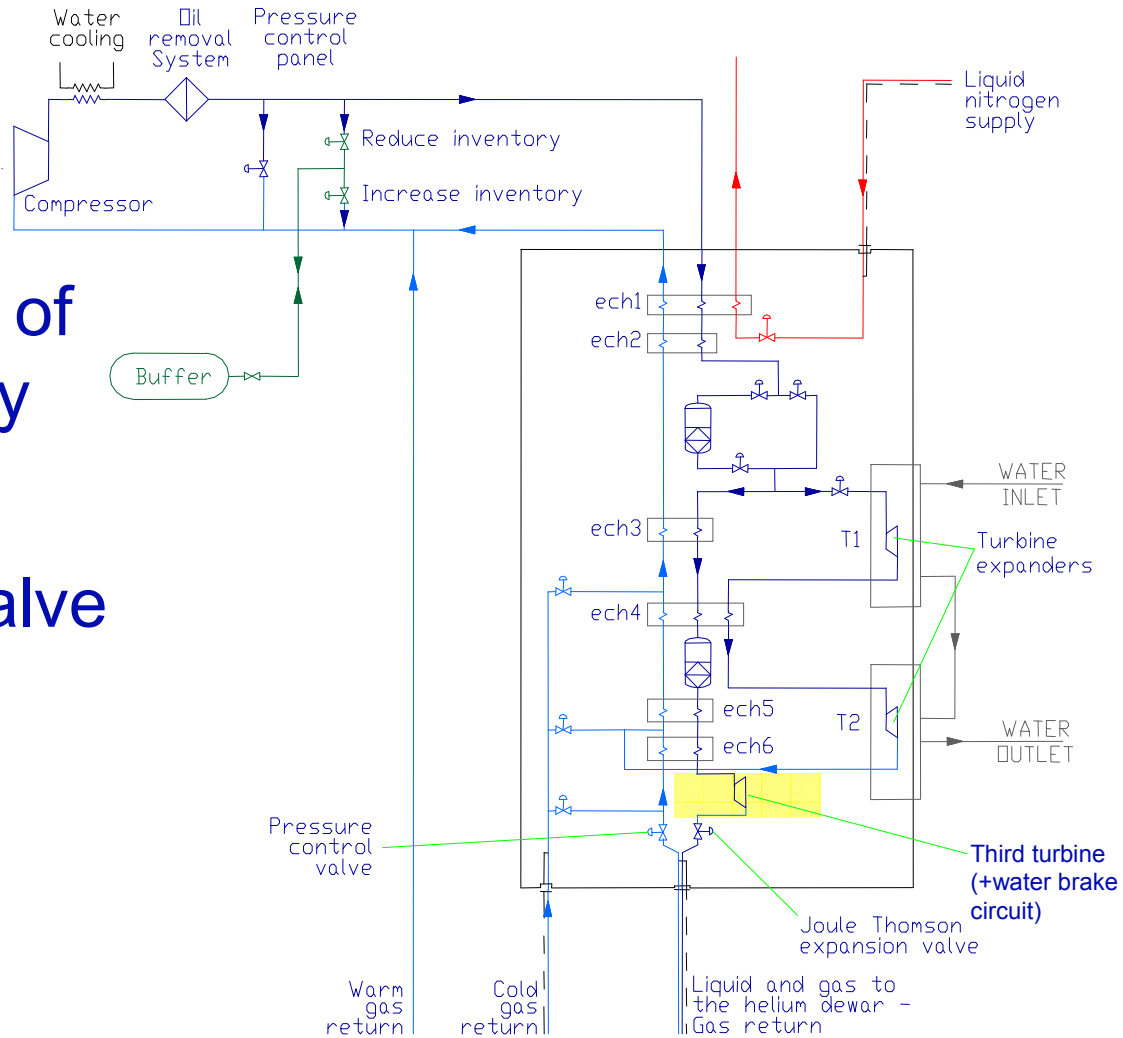

© Monroe Brothers Ltd 2012. Please do not reproduce without the permission of the author.

Third Turbine

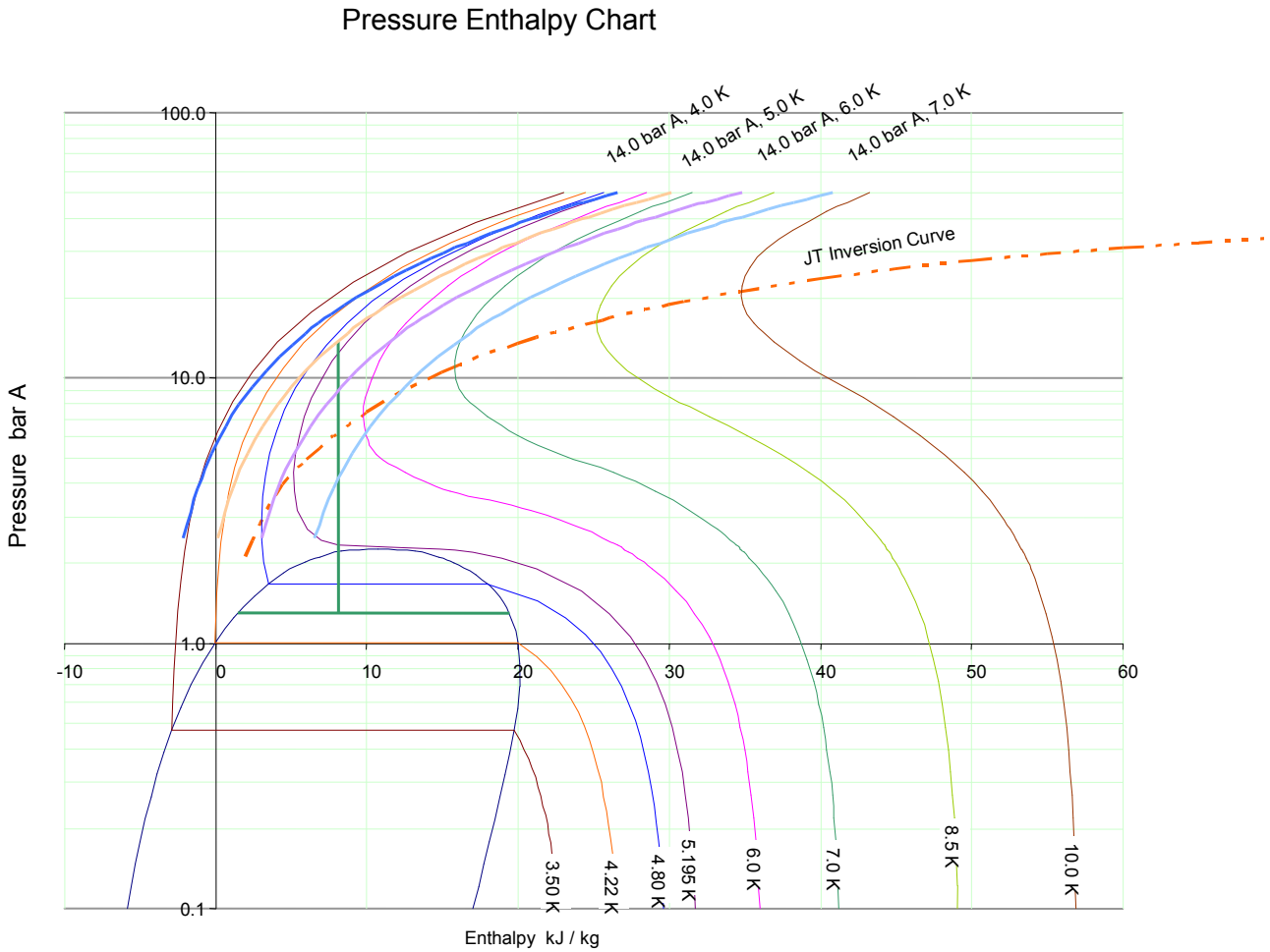

© Monroe Brothers Ltd 2012. Please do not reproduce without the permission of the author.

Third Turbine

⇨ JT Expansion

5.0 K & 13.8 bar A
to
1.3 bar A (4.5 K)

37.2 % vapour &
62.8 % liquid
599 W

⇨ Turbine + JT Expansion

14.4 % vapour &
85.6 % liquid
816 W

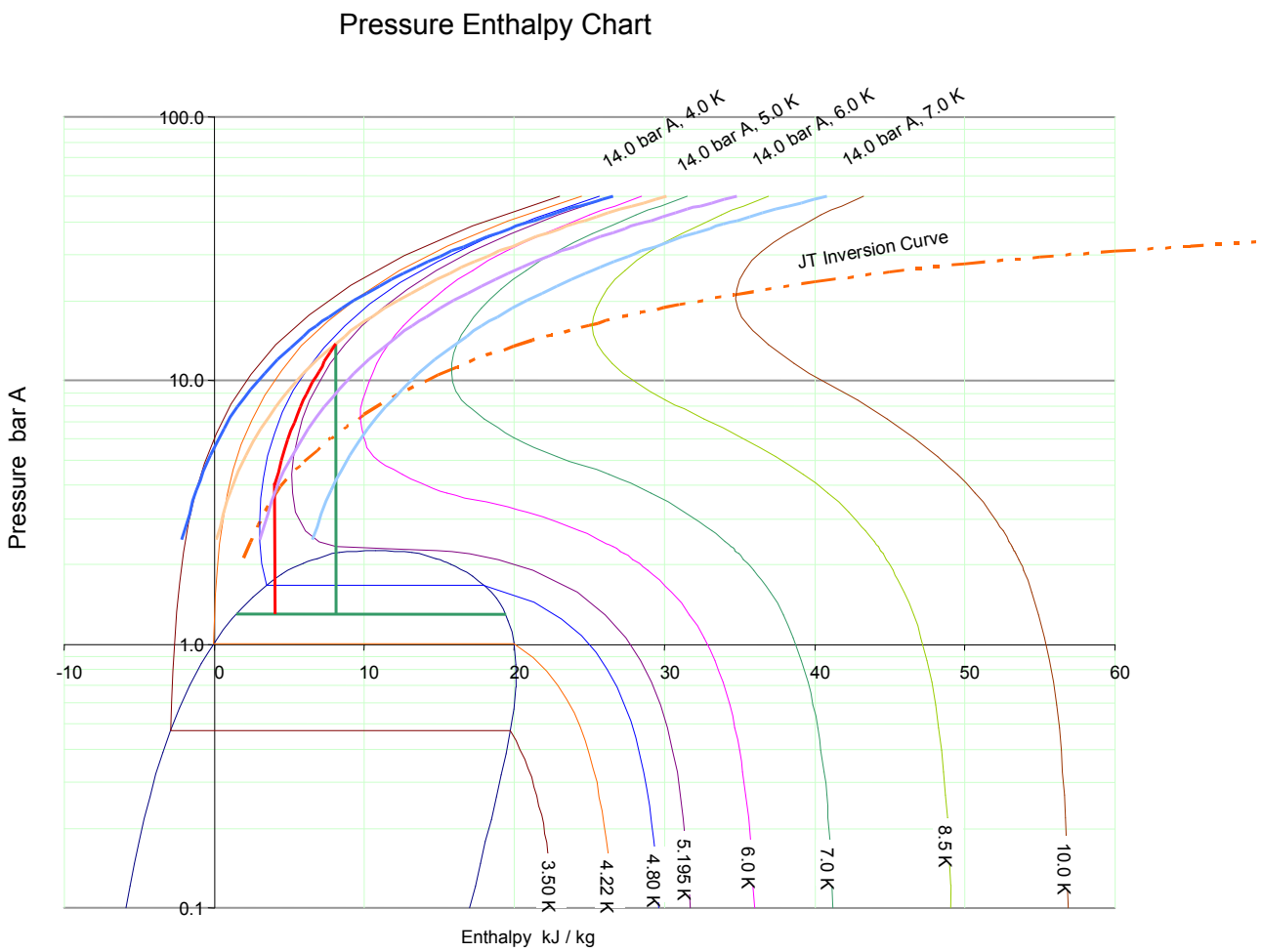

© Monroe Brothers Ltd 2012. Please do not reproduce without the permission of the author.

Sensitivities

- ⇨ Contamination
- ⇨ Incorrect pressures on the turbines
- ⇨ Low pressure or high temperature on the JT valve
- ⇨ High pressure drop on the return gas line
- ⇨ High temperature on the return gas

© Monroe Brothers Ltd 2012. Please do not reproduce without the permission of the author.

Compressor

Compressor

Oil Removal System

Gas Management Panel

Second Compressor

- ⇨ Redundancy
- ⇨ Maintenance scheduling

Diamond Light Source Ltd

© Monroe Brothers Ltd 2012. Please do not reproduce without the permission of the author.

Buffer Tank

- ⇨ Either Small buffer regulate the LP / HP line pressures
- ⇨ Or Large buffer regulate the LP / HP line pressures plus hold the entire helium inventory

2000 liquid litres
2 bar A to 15 bar A
115 m³

Diamond Light Source Ltd

© Monroe Brothers Ltd 2012. Please do not reproduce without the permission of the author.

Adsorbers

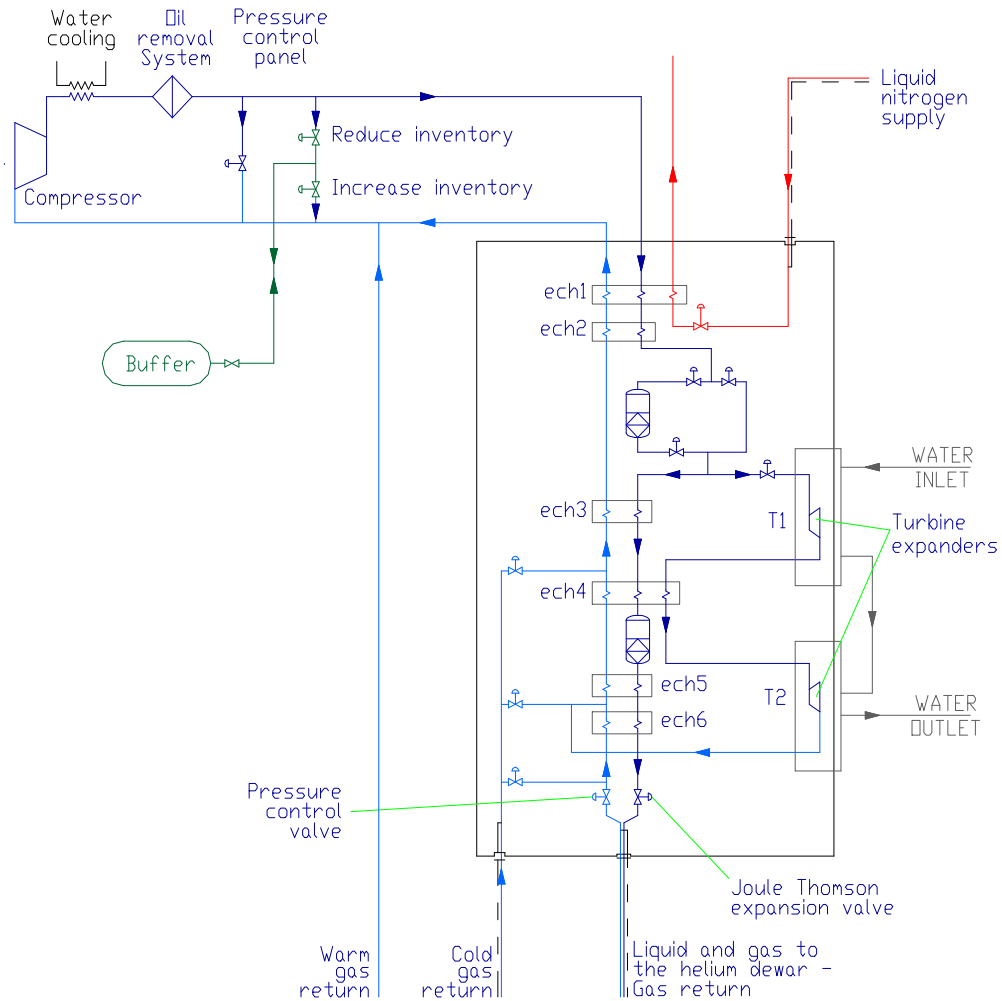

80 K Adsorber
Single or parallel

20 K Adsorber
Normally single

© Monroe Brothers Ltd 2012. Please do not reproduce without the permission of the author.

Finish

© Monroe Brothers Ltd 2012. Please do not reproduce without the permission of the author.

Introduction

- ⇨ Introduction
  - Monroe Brothers Ltd
  - Structure of the talk
- ⇨ Principles of Refrigeration
  - Carnot efficiency
  - Real Efficiency
  - Costs
- ⇨ Refrigeration Systems
  - Main components
  - Cold Box operation
- ⇨ Superconducting RF cavities
  - Cooling requirements
  - Valve Box & transfer lines
  - Control
- ⇨ Other Cooling Requirements
  - Cryocoolers
  - Economics versus practicalities

© Monroe Brothers Ltd 2012. Please do not reproduce without the permission of the author.

Technologies Superconductivity

Superconducting RF Cavities

- Diamond Light Source Ltd
- Synchrotron engine room!
- Superconducting
  v
  Resistive

Image courtesy of Diamond Light Source Ltd

© Monroe Brothers Ltd 2012. Please do not reproduce without the permission of the author.

Technologies Suerconductivity

Superconducting RF Cavities

- Diamond Light Source Ltd
- Synchrotron engine room!
- Superconducting
  v
  Resistive

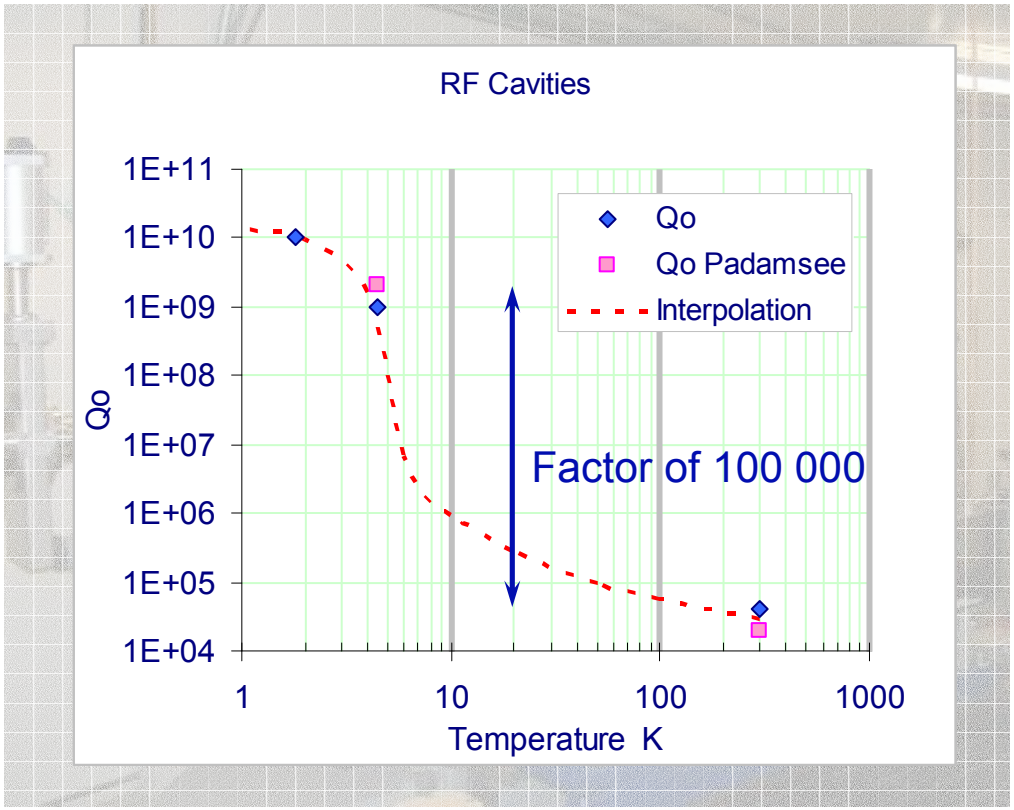

Image courtesy of Diamond Light Source Ltd

© Monroe Brothers Ltd 2012. Please do not reproduce without the permission of the author.

Technologies Suerconductivity

Superconducting RF Cavities

- ⇨ Diamond Light Source Ltd
- ⇨ Synchrotron engine room!
- ⇨ Superconducting
  v
  Resistive

Room temperature

~ Megawatts RF or electrical power

~ Plus cooling

4 K – Liquid Helium Temperature (-269°C)

~ 50 W of RF or Electrical Power

~ Helium liquefier at 25 kW of electrical power

~ Quality improvements

Image courtesy of Diamond Light Source Ltd

© Monroe Brothers Ltd 2012. Please do not reproduce without the permission of the author.

Technologies Suerconductivity

Superconducting RF Cavities

- Diamond Light Source Ltd
- Synchrotron engine room!
- Superconducting
  v
  Resistive

  100 W per cavity

  plus

  50 W distribution

Image courtesy of Diamond Light Source Ltd

© Monroe Brothers Ltd 2012. Please do not reproduce without the permission of the author.

Large Scale refrigeration Systems

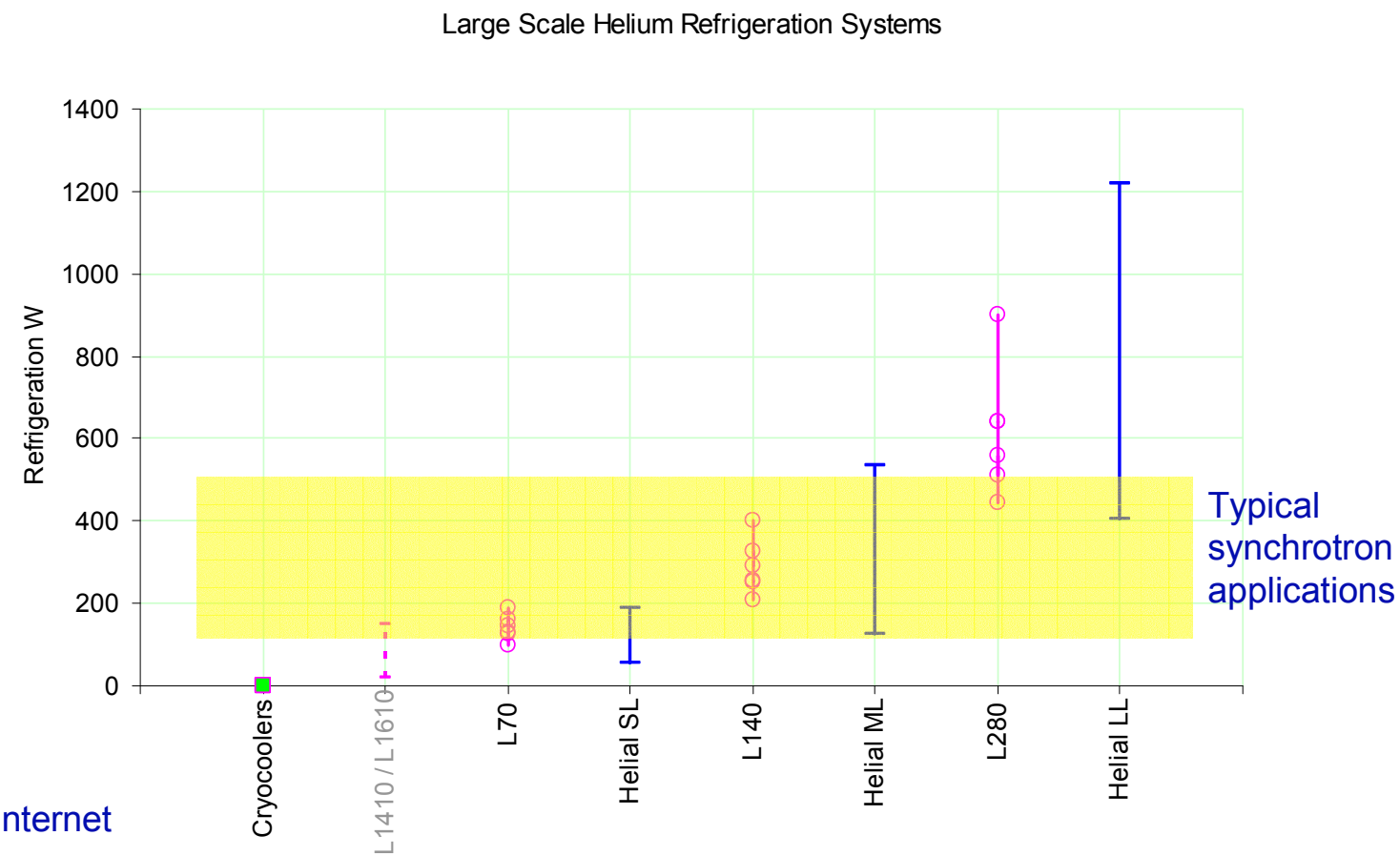

Data from the internet

Liquefaction duties factored to estimate the Refrigeration power

© Monroe Brothers Ltd 2012. Please do not reproduce without the permission of the author.

Basic Principles

Compressor

Pressure Control Panel

Gas buffer
2 to 15 bar A

High pressure

Warm helium gas return

Liquefier Cold Box

Helium two phase flow & return

Cold helium gas return

Liquid helium flow

Helium dewar

Cryogenic system

Images courtesy of Diamond Light Source Ltd

© Monroe Brothers Ltd 2012. Please do not reproduce without the permission of the author.

Process Control

Diamond Light Source Ltd

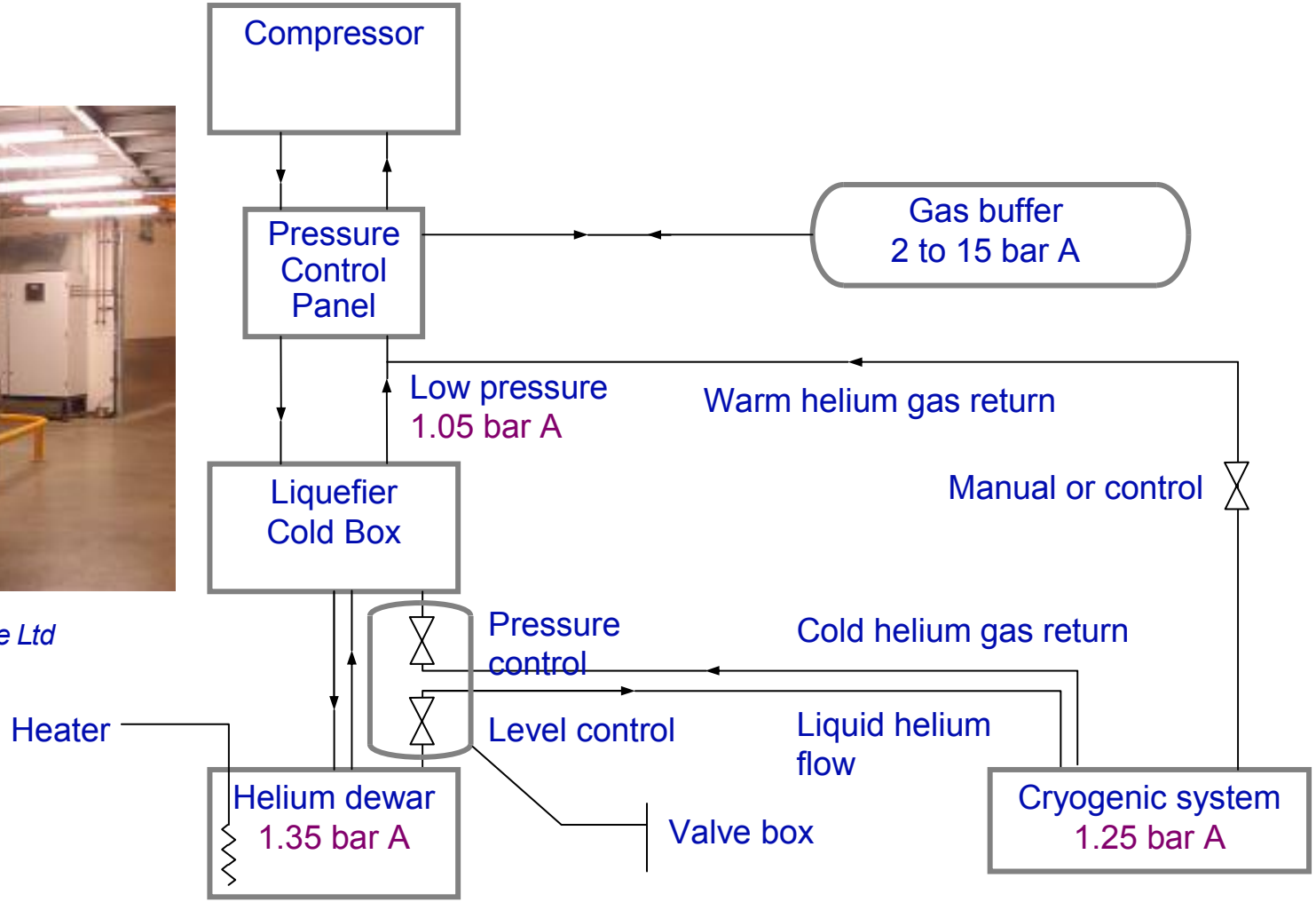

© Monroe Brothers Ltd 2012. Please do not reproduce without the permission of the author.

Process Control

ALICE
STFC Daresbury Laboratory

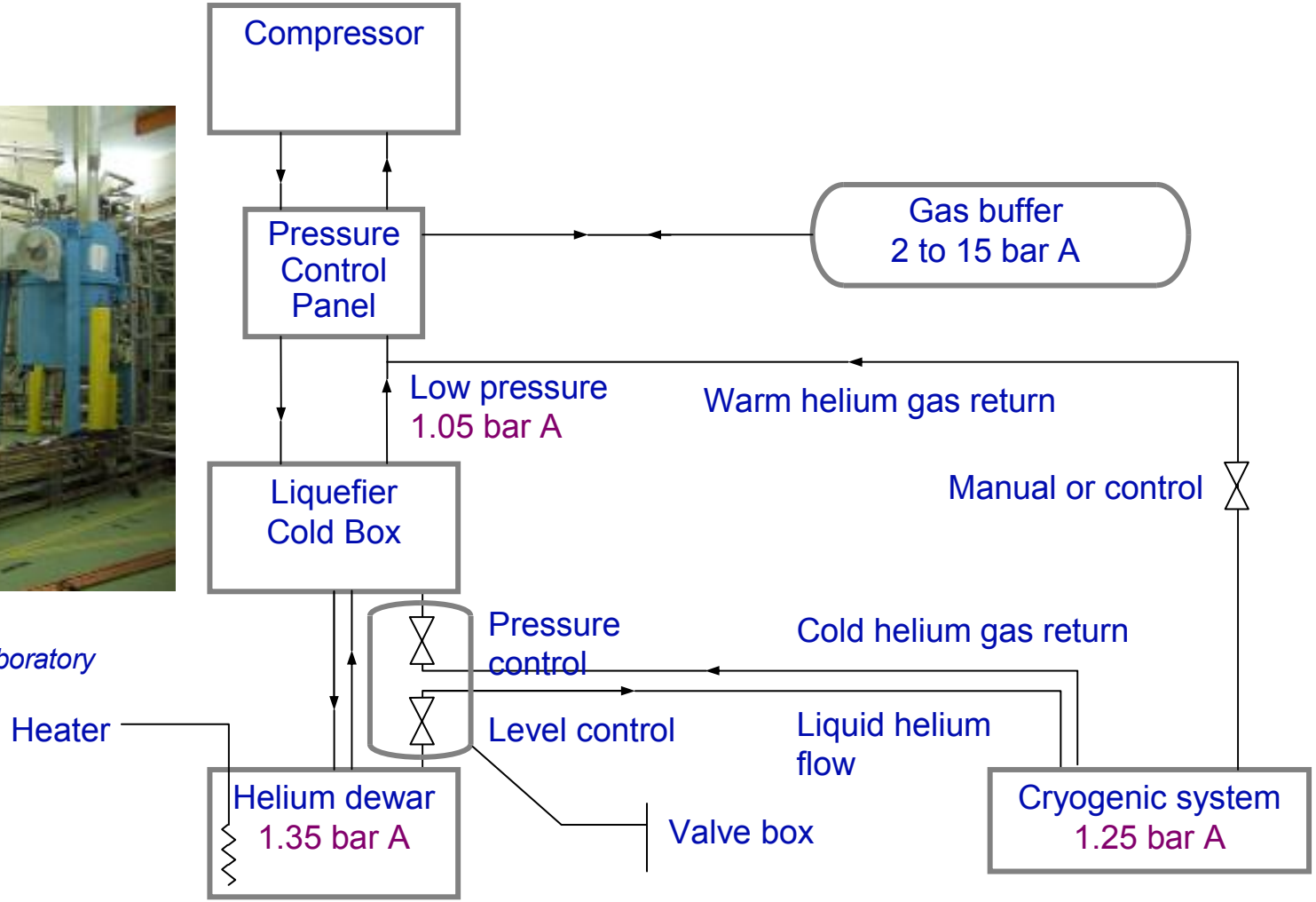

© Monroe Brothers Ltd 2012. Please do not reproduce without the permission of the author.

Process Control

Diamond Light Source Ltd

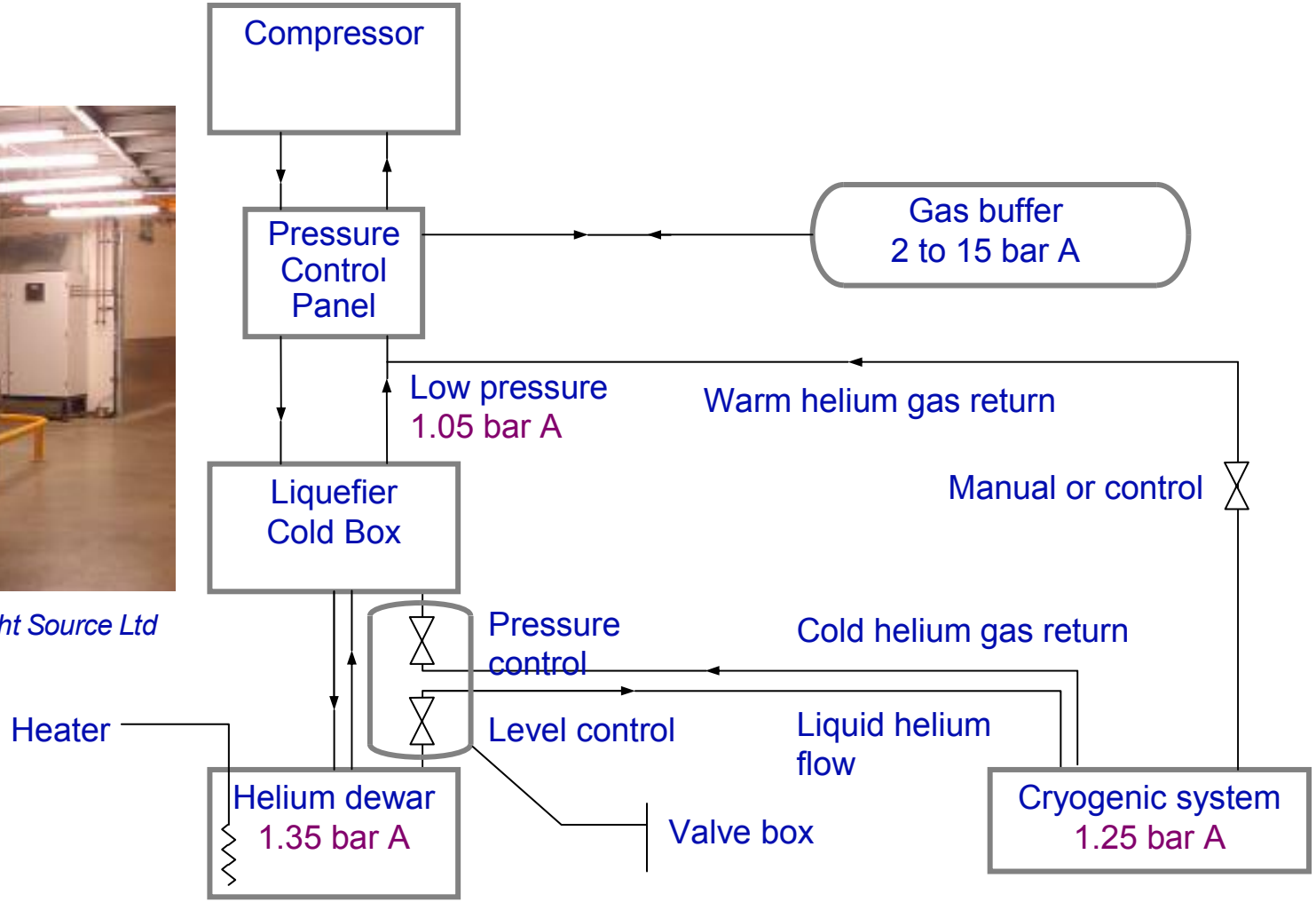

© Monroe Brothers Ltd 2012. Please do not reproduce without the permission of the author.

Process Control - Linde Valve Box

© Monroe Brothers Ltd 2012. Please do not reproduce without the permission of the author.

Process Control

Process design by Scientific Magnetics Ltd

Manufacture by A S Scientific Products Ltd

Size dictated by the number of valves

Supported on stilts

Removable OVC

Images courtesy of:

Scientific Magnetics Ltd, UK
A S Scientific Products Ltd, UK

Customer

National High Magnetic Field Laboratory, Tallahassee

© Monroe Brothers Ltd 2012. Please do not reproduce without the permission of the author.

Process Control

Process design by Scientific Magnetics Ltd

Manufacture by A S Scientific Products Ltd

Size dictated by the number of valves

Supported on stilts

Removable OVC

Images courtesy of:

Scientific Magnetics Ltd, UK
A S Scientific Products Ltd, UK

Customer

National High Magnetic Field Laboratory, Tallahassee

© Monroe Brothers Ltd 2012. Please do not reproduce without the permission of the author.

Process Control

Images courtesy of:

Scientific Magnetics Ltd, UK
A S Scientific Products Ltd, UK

Customer

National High Magnetic Field Laboratory, Tallahassee

© Monroe Brothers Ltd 2012. Please do not reproduce without the permission of the author.

Transfer Lines - Justification

	Cryogen	Air Conditions	Heat Load
Uninsulated pipe	Liquid helium	Still air	700 W / m
Uninsulated pipe	Liquid helium	Moving air	1 500 W / m
Uninsulated pipe	Liquid nitrogen	Still air	60 W / m
Uninsulated pipe	Liquid nitrogen	Moving air	180 W / m
Foam insulation	Any	n-a	20 W / m
Vacuum insulation	Any	n-a	1 W / m
Vacuum insulation Multiflow	Any	n-a	< 0.1 W / m

© Monroe Brothers Ltd 2012. Please do not reproduce without the permission of the author.

Construction Details

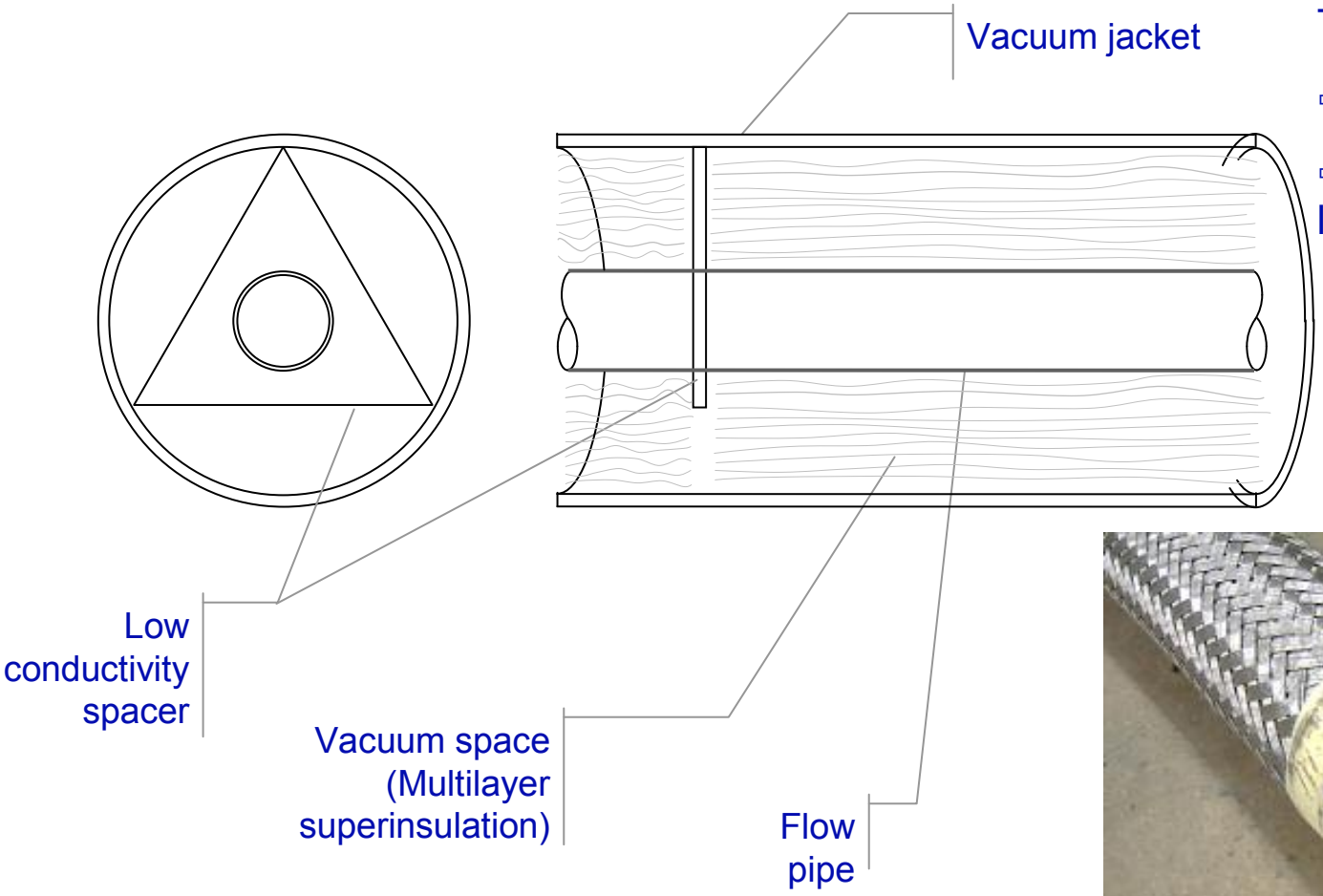

Thermal Contractions

⇨Bellows sections

⇨Manufacture over-length

Heat Load of 1 W / m

© Monroe Brothers Ltd 2012. Please do not reproduce without the permission of the author.

Multiflow Transfer Lines

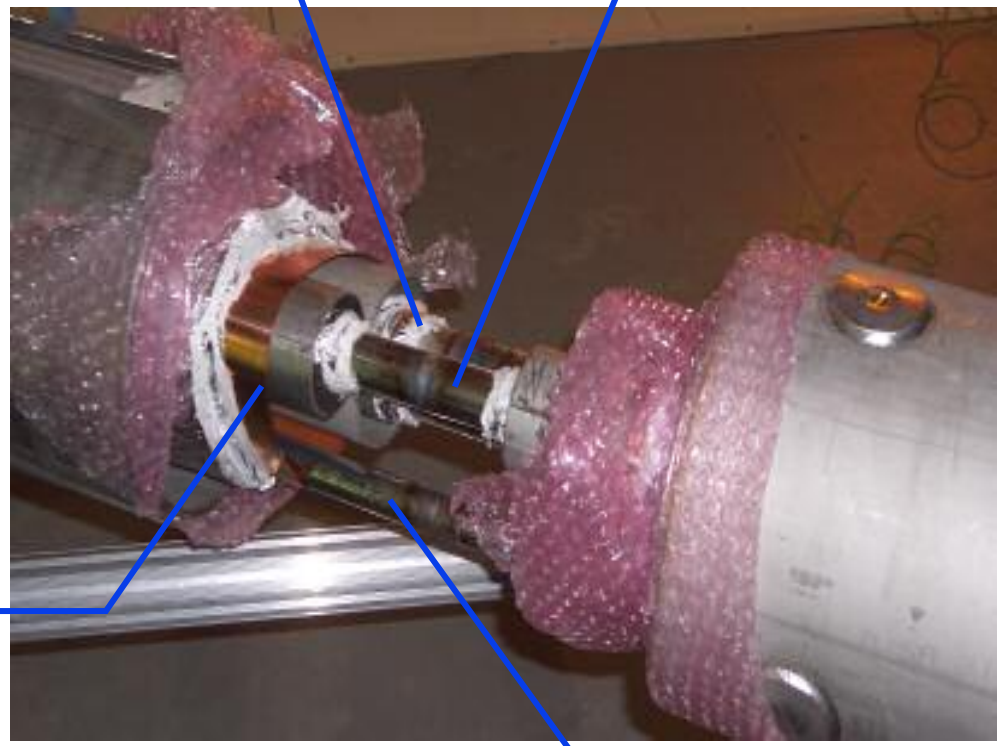

© Monroe Brothers Ltd 2012. Please do not reproduce without the permission of the author.

Multiflow Transfer Lines

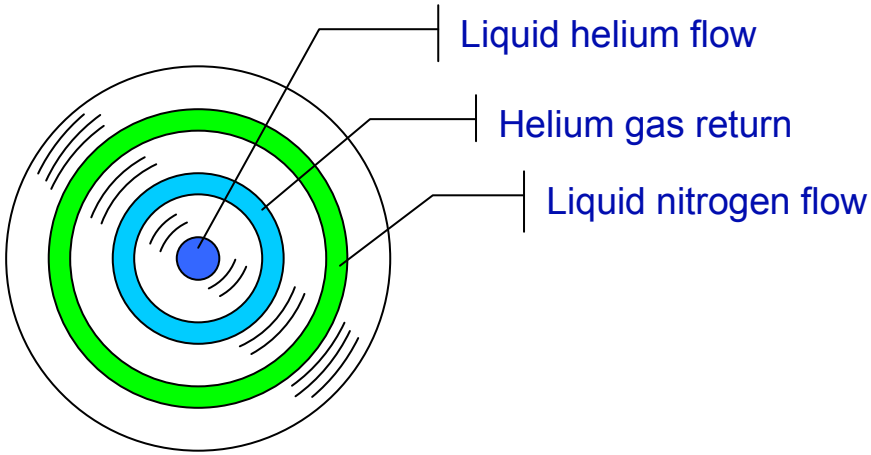

Above: a vacuum insulated 6 tube design for carrying liquid helium, cold helium gas and liquid nitrogen

Right: a vacuum insulated 4 tube design, typically for carrying liquid helium and helium gas return.

Images courtesy of Nexans
http://www.nexans.de

© Monroe Brothers Ltd 2012. Please do not reproduce without the permission of the author.

Multiflow Transfer Lines

	6 Tube	4 Tube	2 Tube
Central flow path	0.02 W / m	0.03 W / m	1 W / m
Middle annular flow path	0.05 W / m		
Outer flow path	1.5 W / m	1.5 W / m	

© Monroe Brothers Ltd 2012. Please do not reproduce without the permission of the author.

Cryogenic Valves

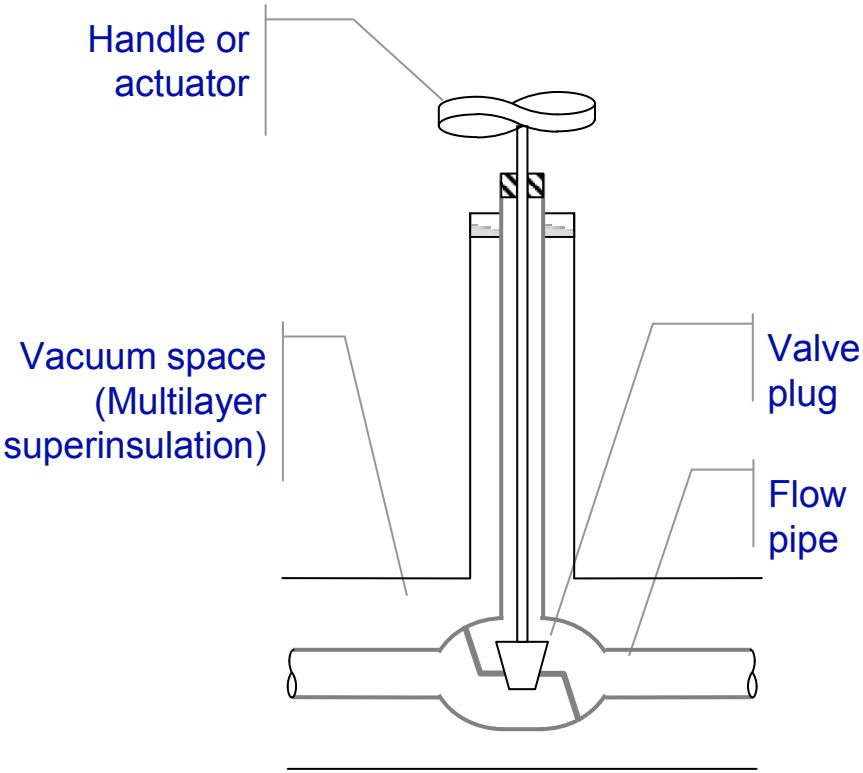

© Monroe Brothers Ltd 2012. Please do not reproduce without the permission of the author.

Welded Transfer Line Connection

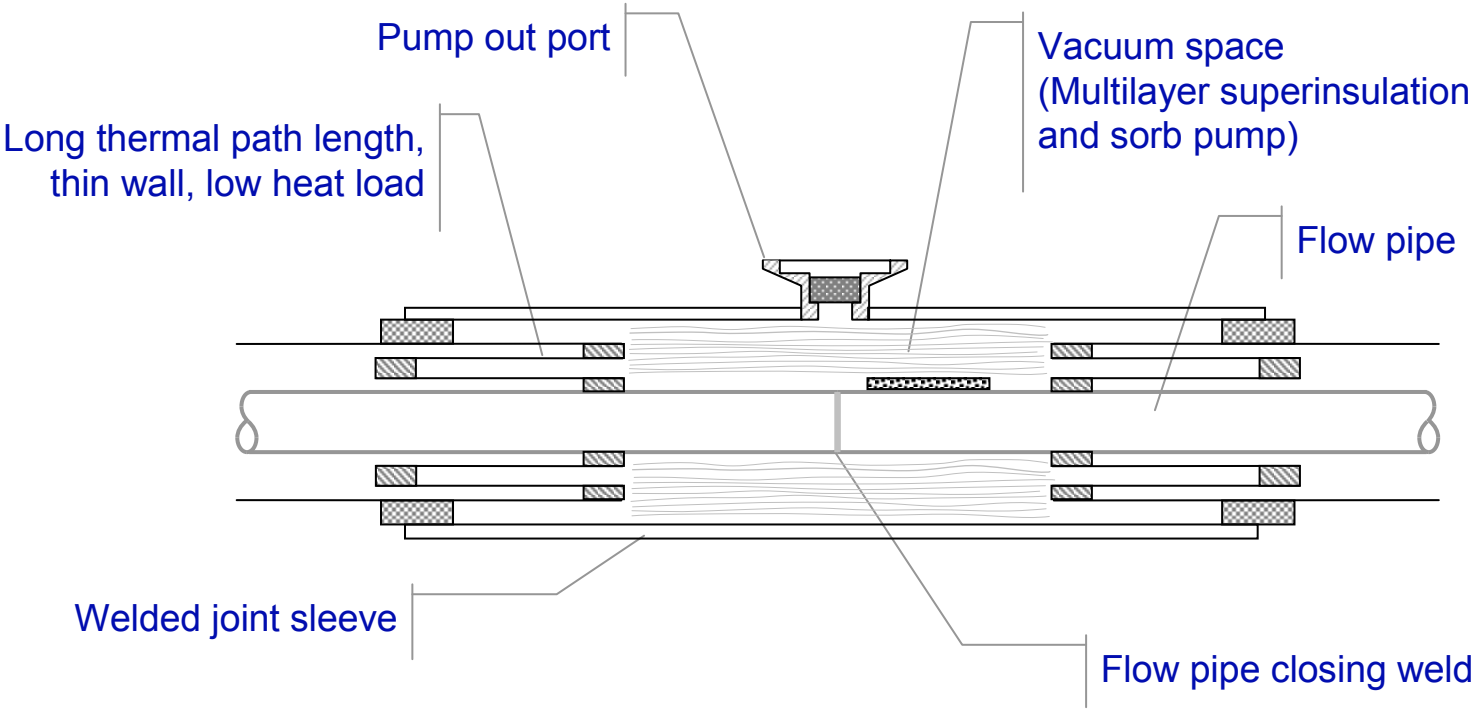

© Monroe Brothers Ltd 2012. Please do not reproduce without the permission of the author.

Vacuum Insulated Pipeline Technology

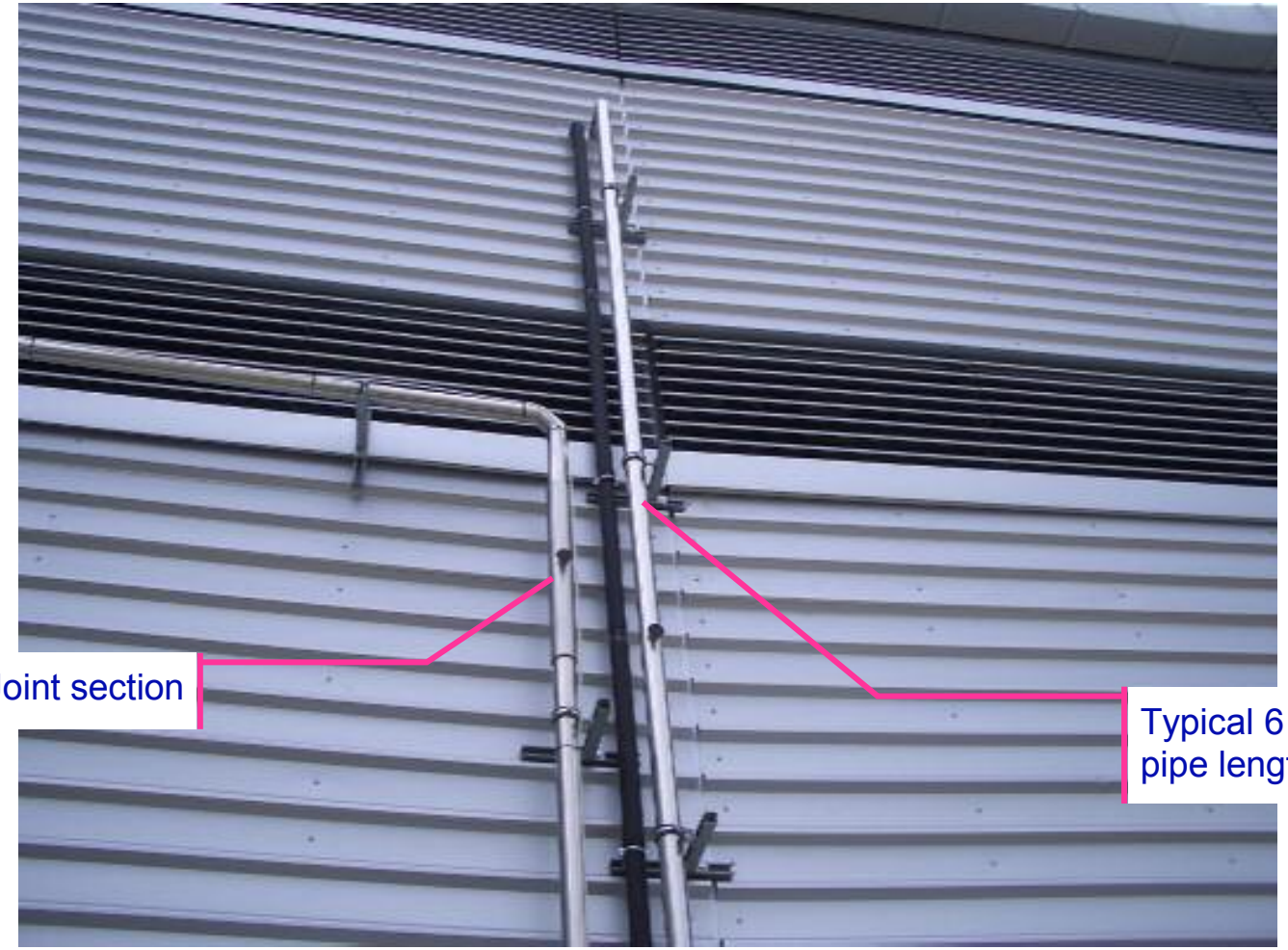

© Monroe Brothers Ltd 2012. Please do not reproduce without the permission of the author.

Bayonet Couplings

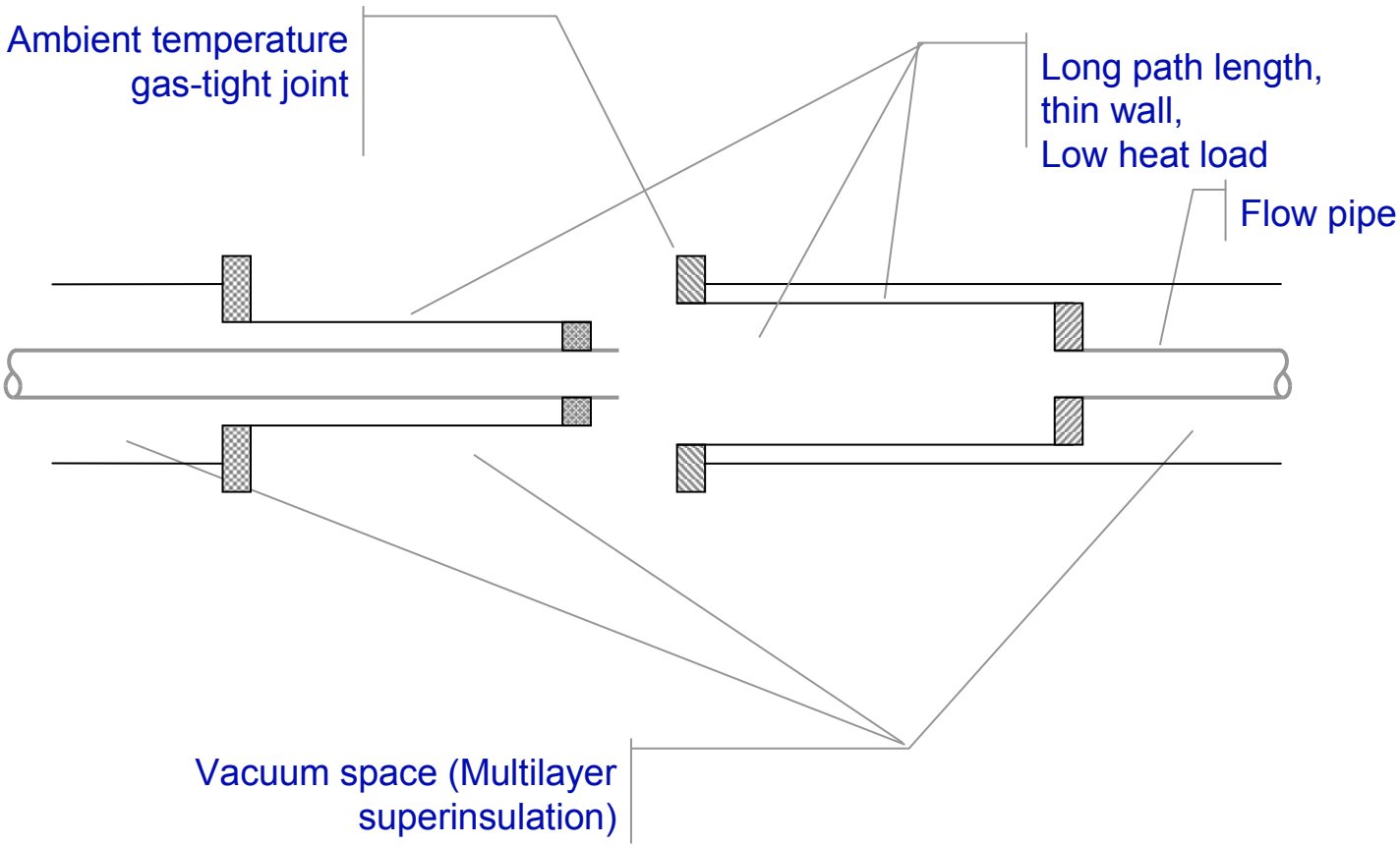

© Monroe Brothers Ltd 2012. Please do not reproduce without the permission of the author.

Modular Tranfser Line Systems

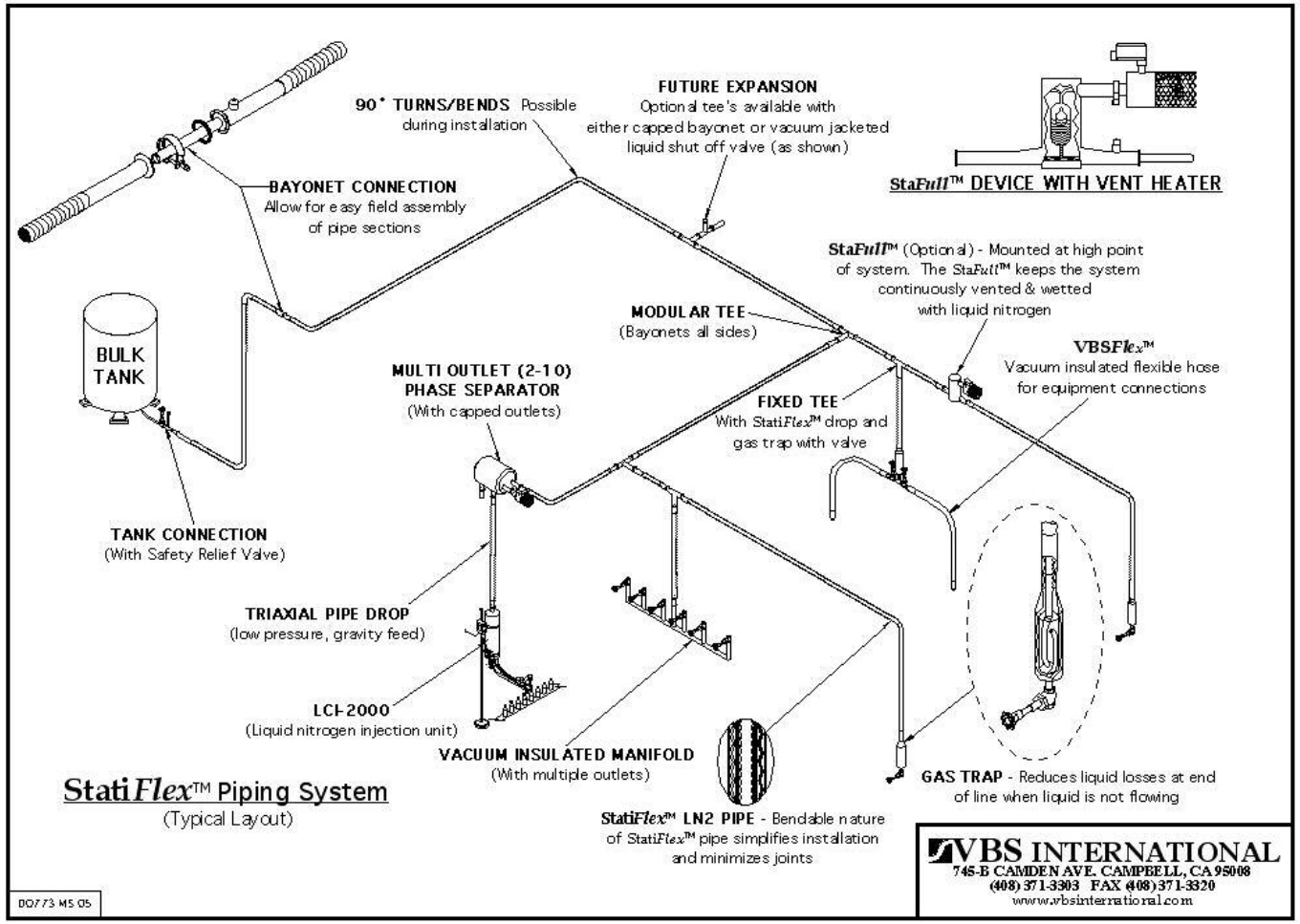

© Monroe Brothers Ltd 2012. Please do not reproduce without the permission of the author.

Multiflow Couplings

Liquid helium

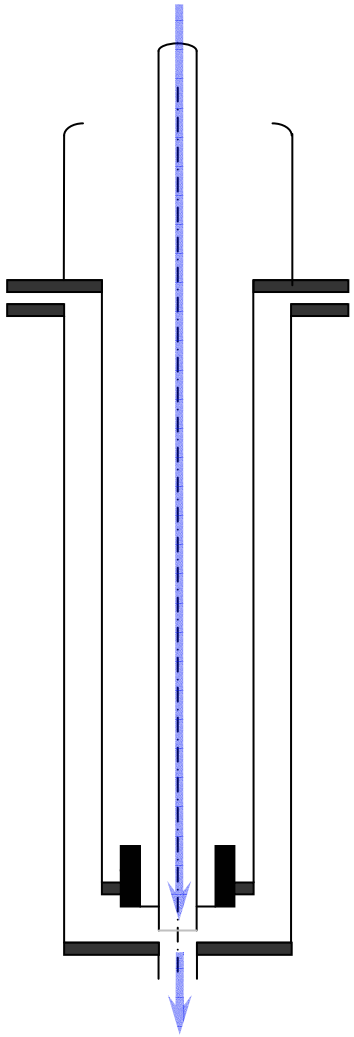

© Monroe Brothers Ltd 2012. Please do not reproduce without the permission of the author.

Multiflow Couplings

Liquid helium

Cold helium gas return

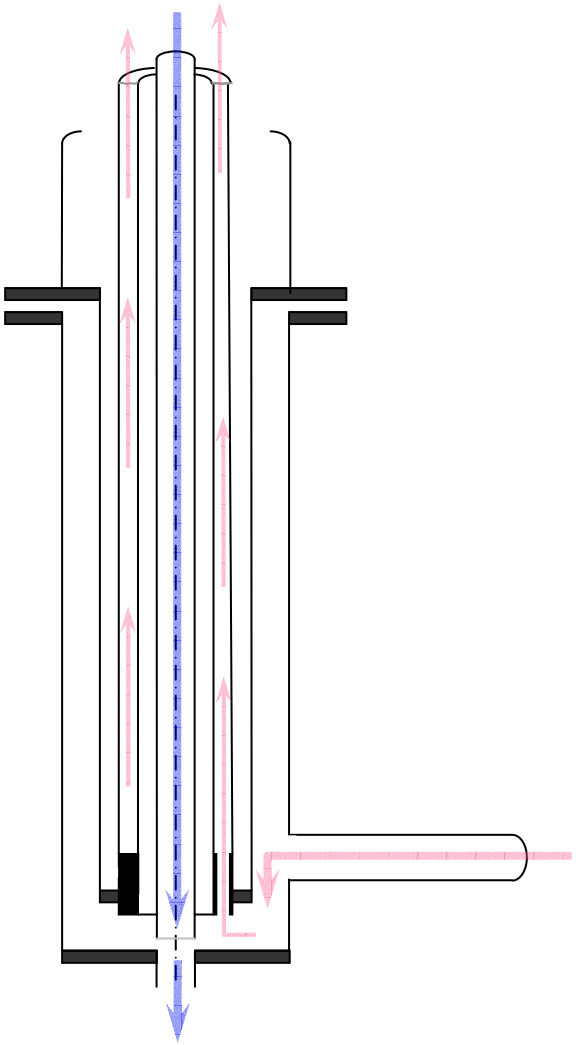

© Monroe Brothers Ltd 2012. Please do not reproduce without the permission of the author.

Multiflow Couplings

Liquid helium

Cold helium gas return

Liquid nitrogen

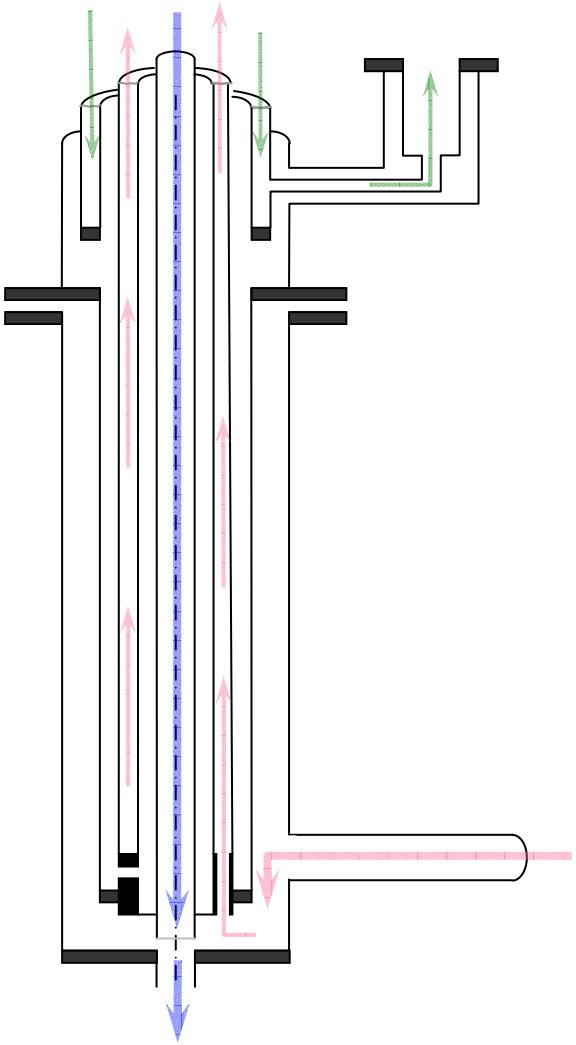

© Monroe Brothers Ltd 2012. Please do not reproduce without the permission of the author.

Multiflow Couplings

Liquid helium

Cold helium gas return

Liquid nitrogen

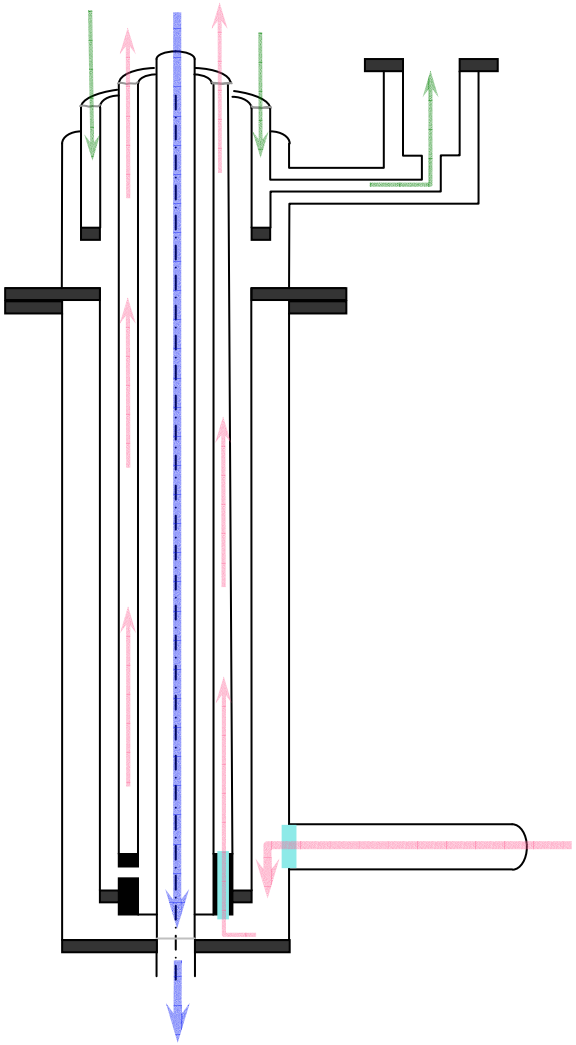

© Monroe Brothers Ltd 2012. Please do not reproduce without the permission of the author.

Multiflow Couplings

Image courtesy of Culham Centre for Fusion Energy

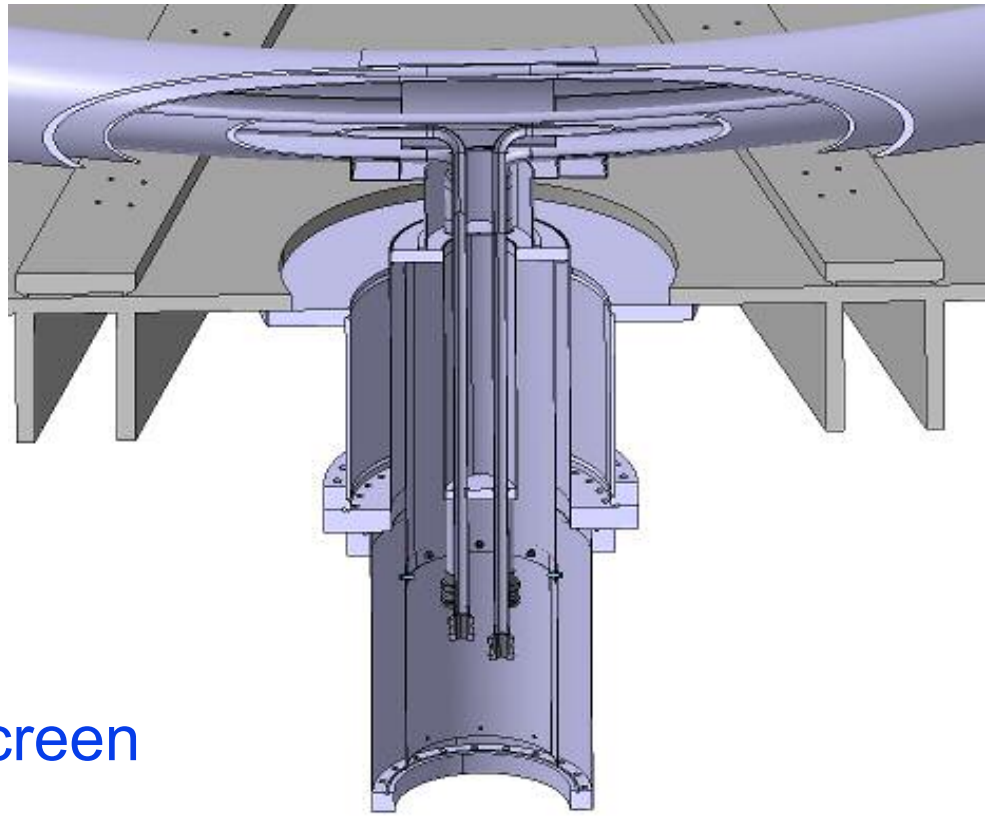

- ⇨ Metal gasket couplings
- ⇨ Vacuum break
- ⇨ Continuous radiation screen

© Monroe Brothers Ltd 2012. Please do not reproduce without the permission of the author.

Pressure Drop

Pressure	Voltage
Pressure drop	Potential difference
Flow rate	Current
Flow area	Conductance

Pressure drop per unit length

$$\frac{\Delta P}{\Delta L} = \frac{f}{2}\frac{G^2}{\rho . d_h}$$

$$\frac{\Delta P}{\Delta L} = \frac{f}{2}\frac{16}{\pi^2}\frac{m^2}{\rho . d_h^5}$$

$$G = \frac{\dot{m}}{A}$$

G	mass flow per unit area
ρ	density
d_h	hydraulic diameter
f	friction coefficient

Size for steady state conditions & cooldown

© Monroe Brothers Ltd 2012. Please do not reproduce without the permission of the author.

Pressure Drop - Friction Coefficient

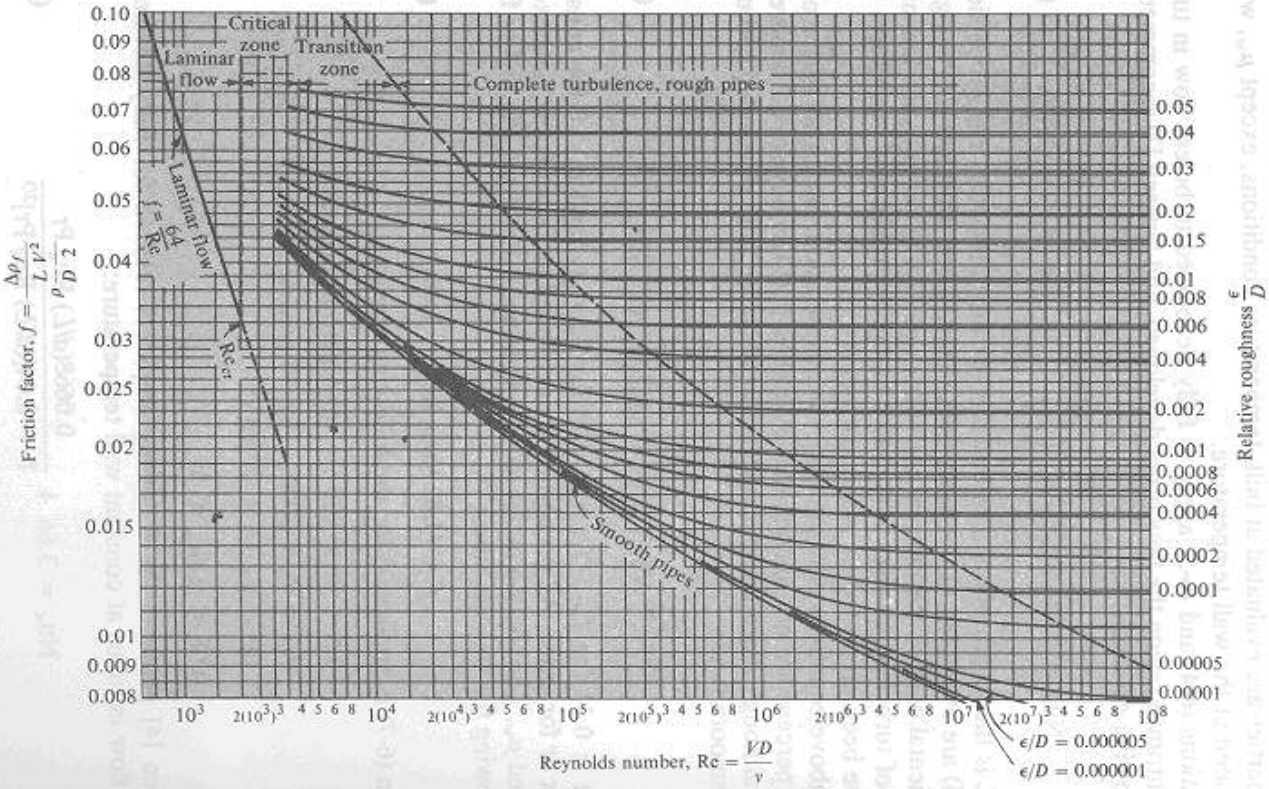

Fig. 6-4 Friction factors for pipes, from Ref. 5.

$$f = \max\left(\frac{0.316}{Re^{0.25}}, \frac{64}{Re}\right)$$

© Monroe Brothers Ltd 2012. Please do not reproduce without the permission of the author.

Pressure Drop

Pressure	Voltage
Pressure drop	Potential difference
Flow rate	Current
Flow area	Conductance

Pressure drop per unit length

$$\frac{\Delta P}{\Delta L} = \frac{f}{2}\frac{G^2}{\rho . d_h}$$

$$\frac{\Delta P}{\Delta L} = \frac{f}{2}\frac{16}{\pi^2}\frac{m^2}{\rho . d_h^5}$$

$$G = \frac{\dot{m}}{A}$$

G	mass flow per unit area
ρ	density
d_h	hydraulic diameter
f	friction coefficient

Size for steady state conditions & cooldown

© Monroe Brothers Ltd 2012. Please do not reproduce without the permission of the author.

Pipeline Sizing

- Contingency add 10% on diameter
  Equivalent to a 50% reduction in pressure drop
- Other pressure drops
  - Section changes are minimised
  - Bends
  - Changes in height

  Limit these so that they are less than the contingency

© Monroe Brothers Ltd 2012. Please do not reproduce without the permission of the author.

Two Phase Flow

Flow rate	10	g / s
Pressure	1.0	bar G
Vapour quality	10%	by mass
Liquid density	779	kg / m³
Vapour density	8.690	kg / m³
Liquid flow rate	11.6	cc / s
Vapour flow rate	115.1	cc / s
Total flow rate	126.6	cc / s
Vapour quality	91%	

© Monroe Brothers Ltd 2012. Please do not reproduce without the permission of the author.

Two Phase Flow

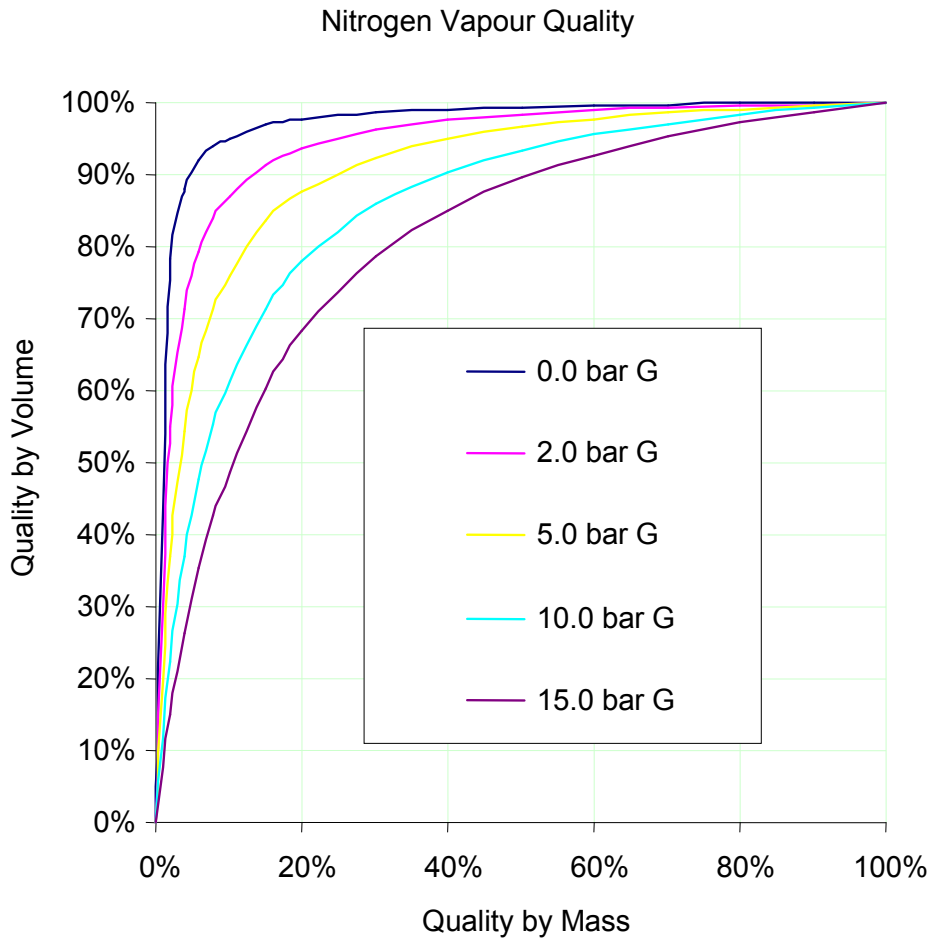

Designing a pipe to carry liquid;

Sizing a pipe to carry a volume.

The latter is strongly influenced by the “waste” gas generated.

© Monroe Brothers Ltd 2012. Please do not reproduce without the permission of the author.

Two Phase Flow

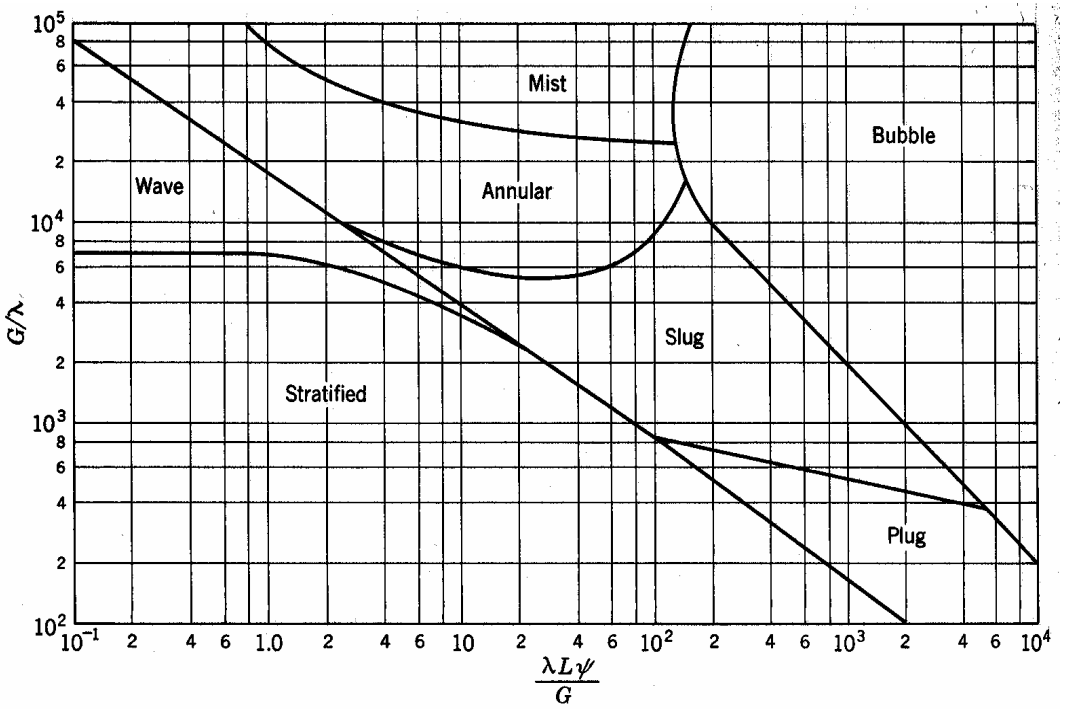

Fig. 7.26. Two-phase flow pattern regions according to Baker (1954).

$\lambda = [(\rho_G/\rho_a)(\rho_L/\rho_w)]^{1/2}$
$\psi = (\sigma_w/\sigma_L)[(\mu_L/\mu_w)(\rho_w/\rho_L)^2]^{1/3}$
L = liquid mass flow rate per unit area, $lb_m/hr\text{-}ft^2$
G = vapor mass flow rate per unit area, $lb_m/hr\text{-}ft^2$
ρ_G = vapor density
ρ_L = liquid density

ρ_a = density of air = 1.20 kg/m^3 = 0.075 lb_m/ft^3
ρ_w = density of water = 998 kg/m^3 = 62.3 lb_m/ft^3
σ_L = surface tension
σ_w = water surface tension = 0.073 N/m
μ_L = liquid viscosity
μ_w = water viscosity = 0.001 Pa-s = 1 centipoise

Use the Lockhart Martinelli method

© Monroe Brothers Ltd 2012. Please do not reproduce without the permission of the author.

Lockhart Martinelli - Two Phase Flow Pressure Drop

Calculate the pressure drop as if the **liquid** alone occupied the pipe. $\frac{DP}{DL_L}$

Calculate the pressure drop as if the **gas** alone occupied the pipe. $\frac{DP}{DL_V}$

$$X_{tt} = \frac{DP/DL_L}{DP/DL_V}$$

C	Liquid Flow	Gas Flow
5	Laminar	Laminar
10	Turbulent	Laminar
12	Laminar	Turbulent
20	Turbulent	Turbulent

$$\Phi = \frac{\sqrt{X_{tt}^2 + C \cdot X_{tt} + 1}}{X_{tt}}$$

Two phase pressure drop $\frac{DP}{DL_{TP}} = \Phi^2 \cdot \frac{DP}{DL_L}$

Pipe size is often influenced by the cooldown conditions - single phase

© Monroe Brothers Ltd 2012. Please do not reproduce without the permission of the author.

Control Valves

- Turndown: ratio of the full flow capacity to minimum flow

Ball control valve	8	Invensys Flowserve
Globe valve RMC	20	Badger meter valve,
High quality globe valve	50	Weka cryogenic valve

Don't oversize control valves!

- Size for extreme conditions
  - min. flow, max. pressure drop, min. vapour quality
  - max flow, min pressure drop, max vapour quality

© Monroe Brothers Ltd 2012. Please do not reproduce without the permission of the author.

Control Valves

$$C_v = Q\sqrt{\frac{G}{\Delta P}} \qquad K_v = Q\sqrt{\frac{G}{\Delta P}}$$

⇨ Sizing

C_v	US Gallons of water	1 psi
K_v	m^3 / hr of water	1 bar
K_v	litres / min of water	1 bar

© Monroe Brothers Ltd 2012. Please do not reproduce without the permission of the author.

Control Valves

- ⇨ Flow rate for cooldown
- ⇨ Range of control flow at cryogenic conditions
- ⇨ Heat load in the supply line and the gas generated
- ⇨ Variations in the supply pressure
- ⇨ Variations in the downstream pressure

Liquid nitrogen systems

- ⇨ Variations in the vapour pressure

© Monroe Brothers Ltd 2012. Please do not reproduce without the permission of the author.

Control Valves

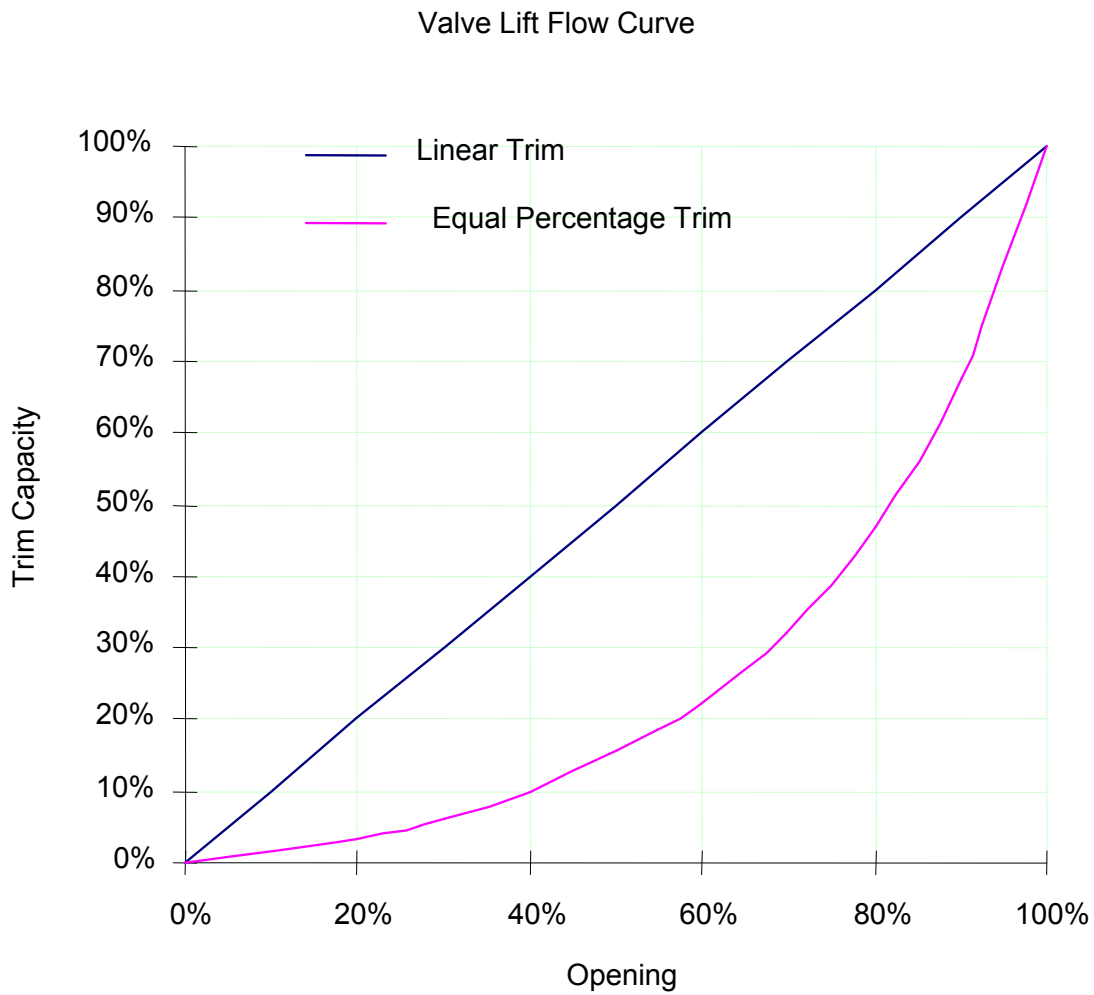

© Monroe Brothers Ltd 2012. Please do not reproduce without the permission of the author.

Cryogenic Valves

- Low heat load
- Good turn down
- Multiple trims for a given valve body
- Customised trim for cryogenic applications
- Reliability

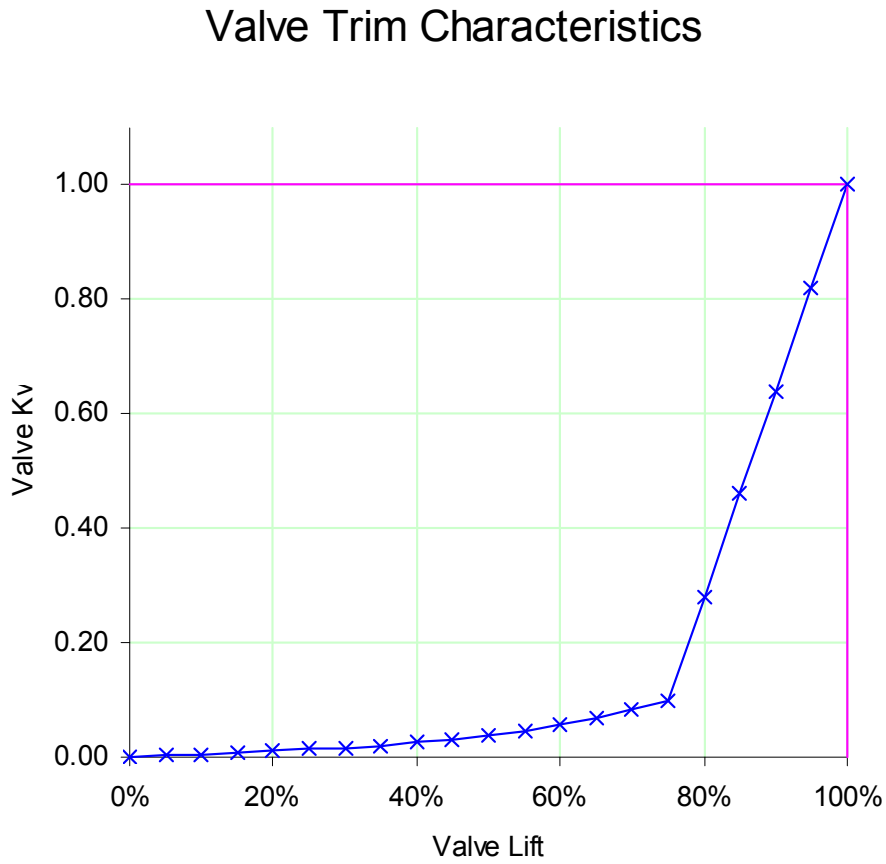

Weka AG, Switzerland

© Monroe Brothers Ltd 2012. Please do not reproduce without the permission of the author.

Return Line Pressure Drop

Stable pressure and temperature

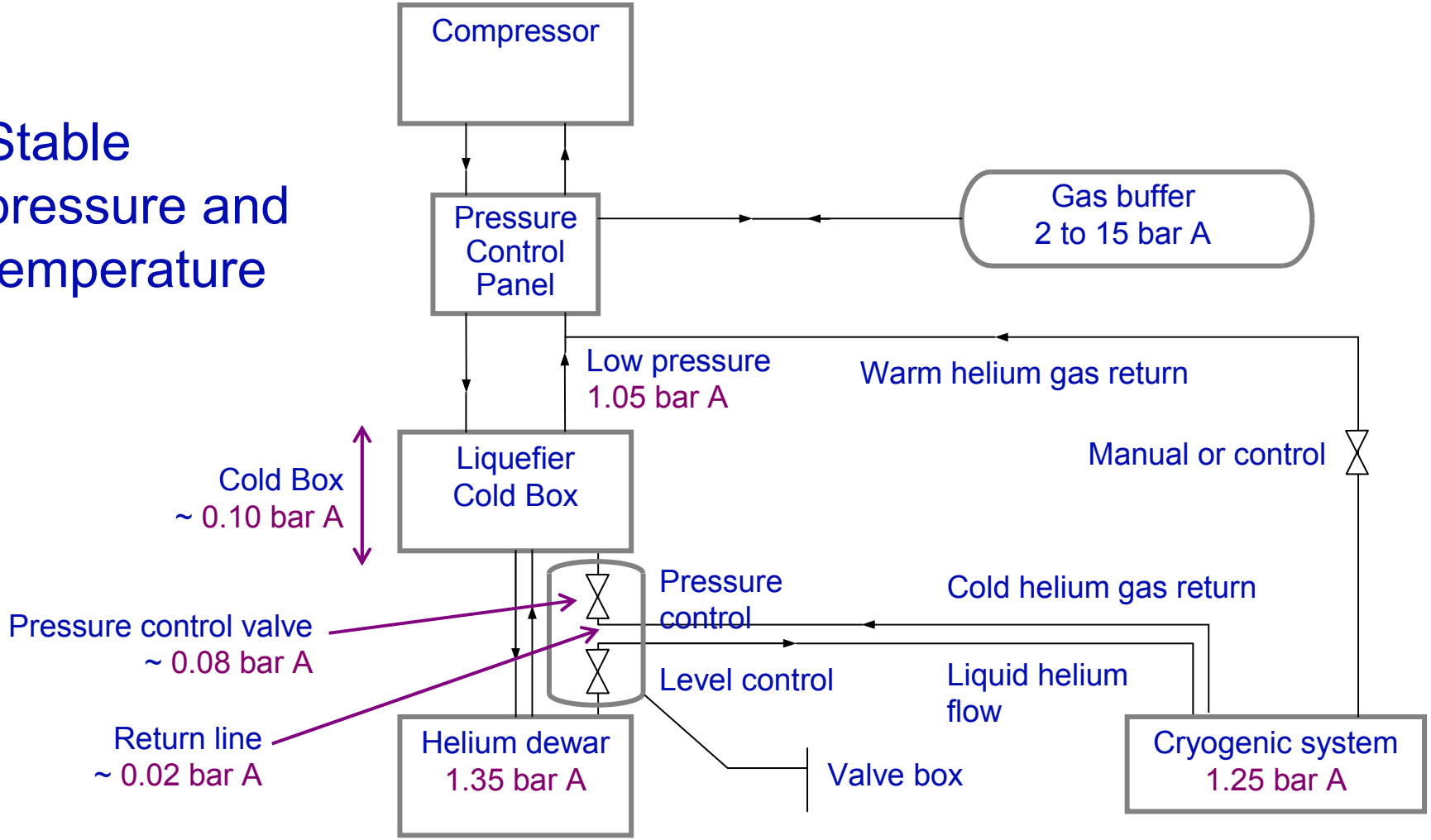

© Monroe Brothers Ltd 2012. Please do not reproduce without the permission of the author.

Finish

© Monroe Brothers Ltd 2012. Please do not reproduce without the permission of the author.

Introduction

⇨ Introduction	- Monroe Brothers Ltd - Structure of the talk
⇨ Principles of Refrigeration	- Carnot efficiency - Real Efficiency - Costs
⇨ Refrigeration Systems	- Main components - Cold Box operation
⇨ Superconducting RF cavities	- Cooling requirements - Valve Box & transfer lines - Control
⇨ **Other Cooling Requirements**	**- Cryocoolers** **- Economics versus practicalities**

© Monroe Brothers Ltd 2012. Please do not reproduce without the permission of the author.

Large Scale refrigeration Systems

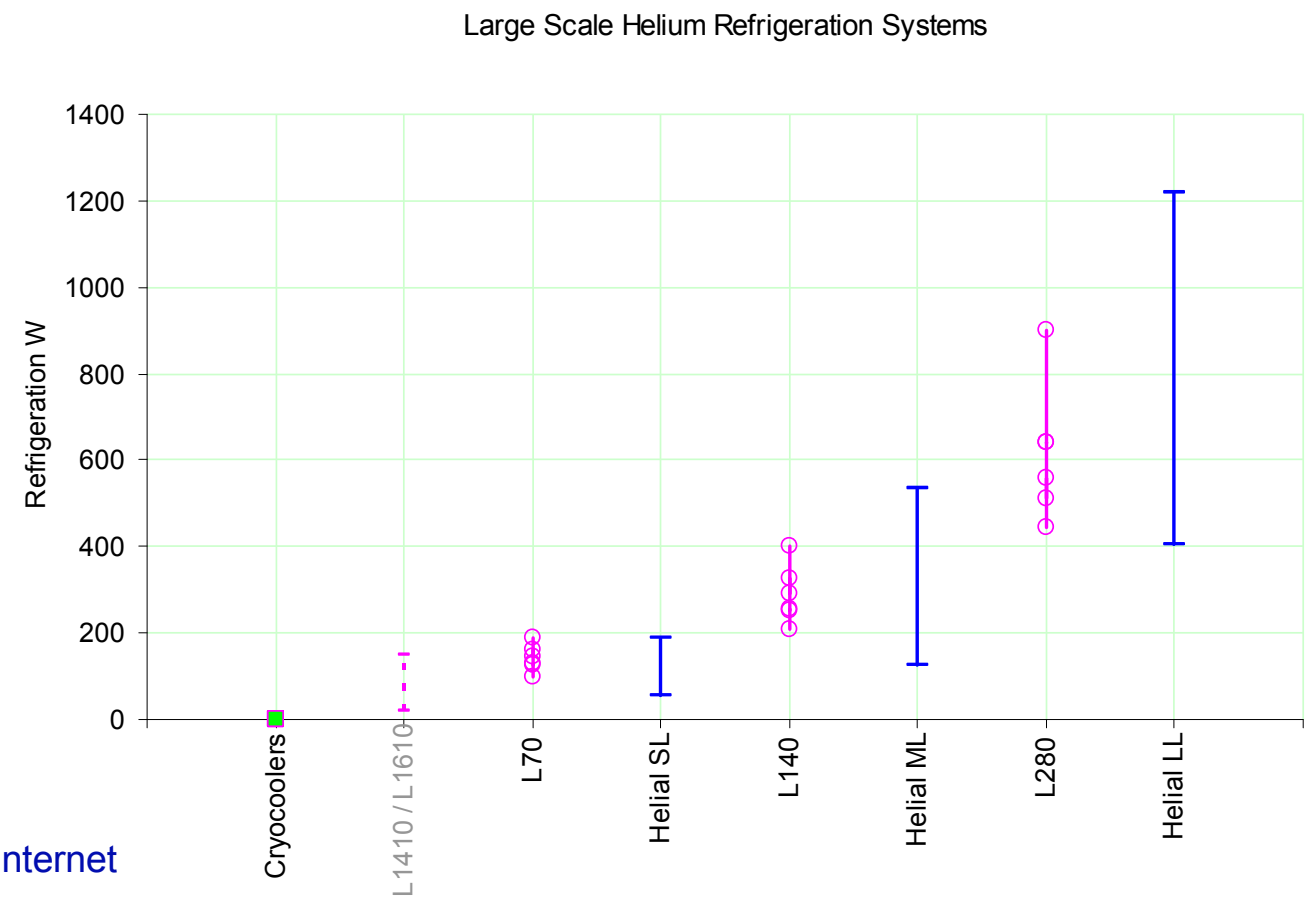

Data from the internet

Liquefaction duties factored to estimate the Refrigeration power

© Monroe Brothers Ltd 2012. Please do not reproduce without the permission of the author.

Cryocoolers

- Cooling powers up to 1.5 W at 4 K
  40 W at 45 K
- Enabling technology
  HTSC leads
- Zero Loss - cryostats with zero boil-off
- Dry Systems - no inventory of cryogens

Sumitomo SRDK-415D

Image courtesy of Sumitomo Heavy Industries Cryogenics Group

© Monroe Brothers Ltd 2012. Please do not reproduce without the permission of the author.

REFRIGERATION AT 4K ~ 1 W

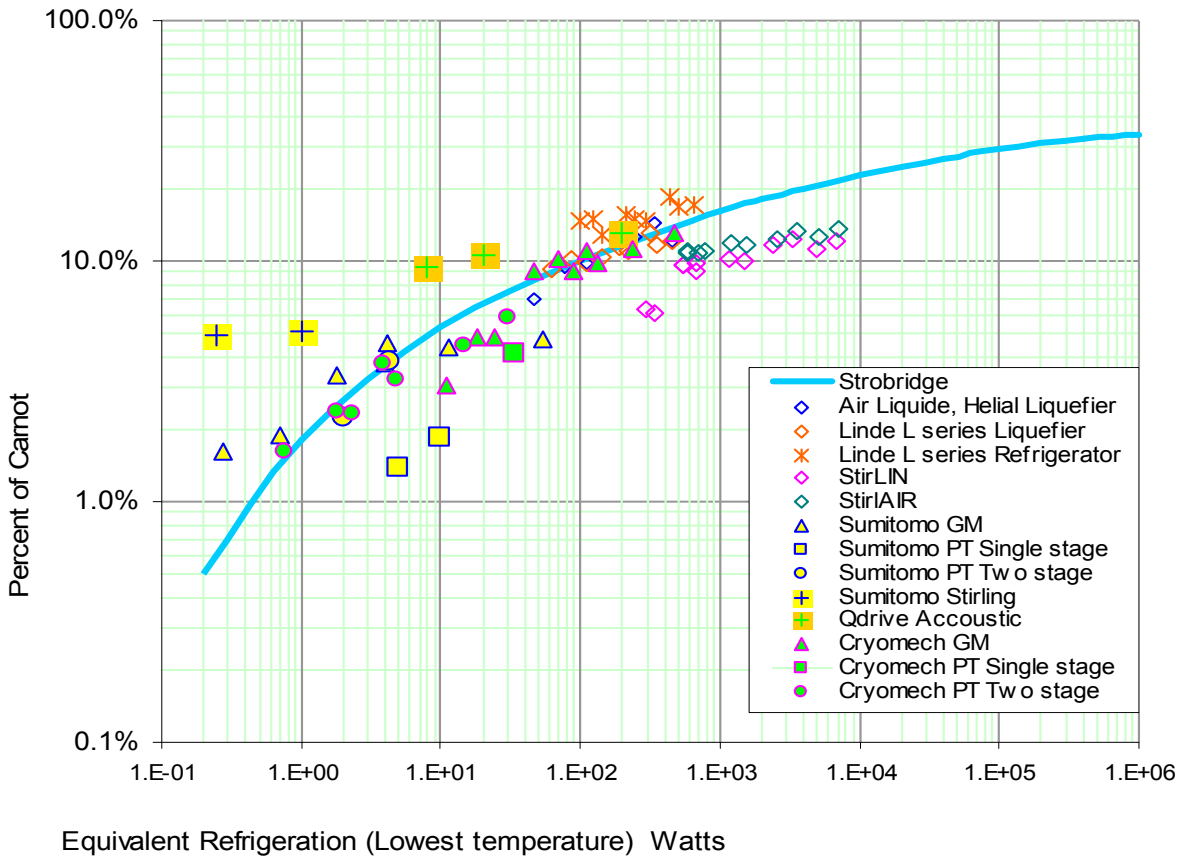

Strobridge Plot

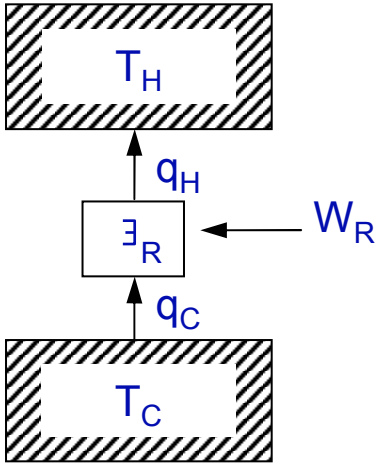

$$COP = \frac{q_C}{W_R} = \frac{T_C}{T_H - T_C}$$

$$\frac{1}{COP_{Ideal}} = \frac{W_R}{q_C} = 67$$

$$\frac{1}{COP_{Real}} = \frac{W_R}{q_C} = 5000$$

© Monroe Brothers Ltd 2012. Please do not reproduce without the permission of the author.

Costs

	Cryocooler 1 W to 1.5 W	Helium Refrigerator 500 W	Bulk Cryogens
Equipment	$ 40 k to $ 65 k	$ 2 M to 4 M	
Operating costs	$ 25 k pa	$ 700 k pa	
Specific Costs			
- equipment	$ 50 k per W	$ 5 k per W	
- refrigeration	$ 15 k pa per W	$ 2 k to $ 4 k pa per W	$ 100 k to $ 200 k pa per W
Specific Costs			
- equipment		$ 20 k per l / hr	
- liquefaction		$ 0.50 to $ 2.00 per litre	$ 10 to $ 20 per litre

Design the cryostat to match the capacity of a cryocooler
Avoid the equipment cost of a Liquefier

© Monroe Brothers Ltd 2012. Please do not reproduce without the permission of the author.

Principles

Notes

2

- Four steps
  - Compression
  - Cooling
  - Expansion
  - Heating
- Regenerator

© Monroe Brothers Ltd 2012. Please do not reproduce without the permission of the author.

Principles

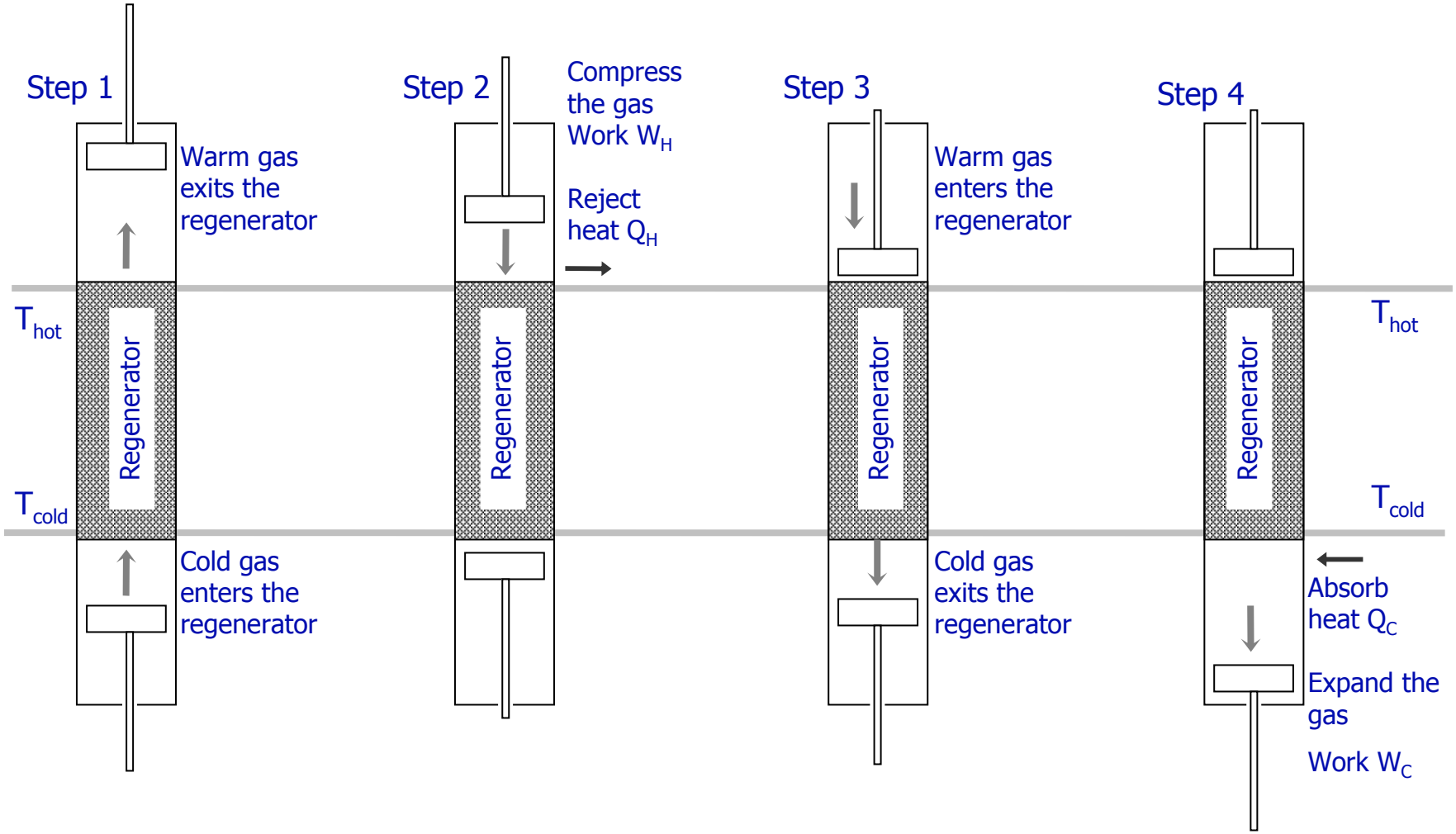

© Monroe Brothers Ltd 2012. Please do not reproduce without the permission of the author.

Regenerator - Ideal Properties

- ⇨ Perfect insulator along the length
- ⇨ High thermal conductivity at the surface
- ⇨ High thermal capacity
- ⇨ Large surface area
- ⇨ Low flow impedance

© Monroe Brothers Ltd 2012. Please do not reproduce without the permission of the author.

Subcomponents

- Compressor (air cooled or water cooled)
- Regenerator
- Displacer
- Coldhead

© Monroe Brothers Ltd 2012. Please do not reproduce without the permission of the author.

Cryocooler Types

Stirling Cycle	Gifford McMahon	Pulse Tube Cooler
Phase shift between the compressor and the cold displacer	Valves on the coldhead to sequence the cold displacer movement	Orifice instead of cold displacer. No cold moving parts.
⇨ Efficient ⇨ Reliable ⇨ Low vibration	⇨ Effective ⇨ Remote compressor	⇨ Effective ⇨ Remote compressor ⇨ Low vibration ⇨ Low maintenance
⇨ Compressor close to the coldhead	⇨ Vibration	⇨ Vertical axis for the coldhead ⇨ ?

© Monroe Brothers Ltd 2012. Please do not reproduce without the permission of the author.

Two Stage Cooler Capacity Curves

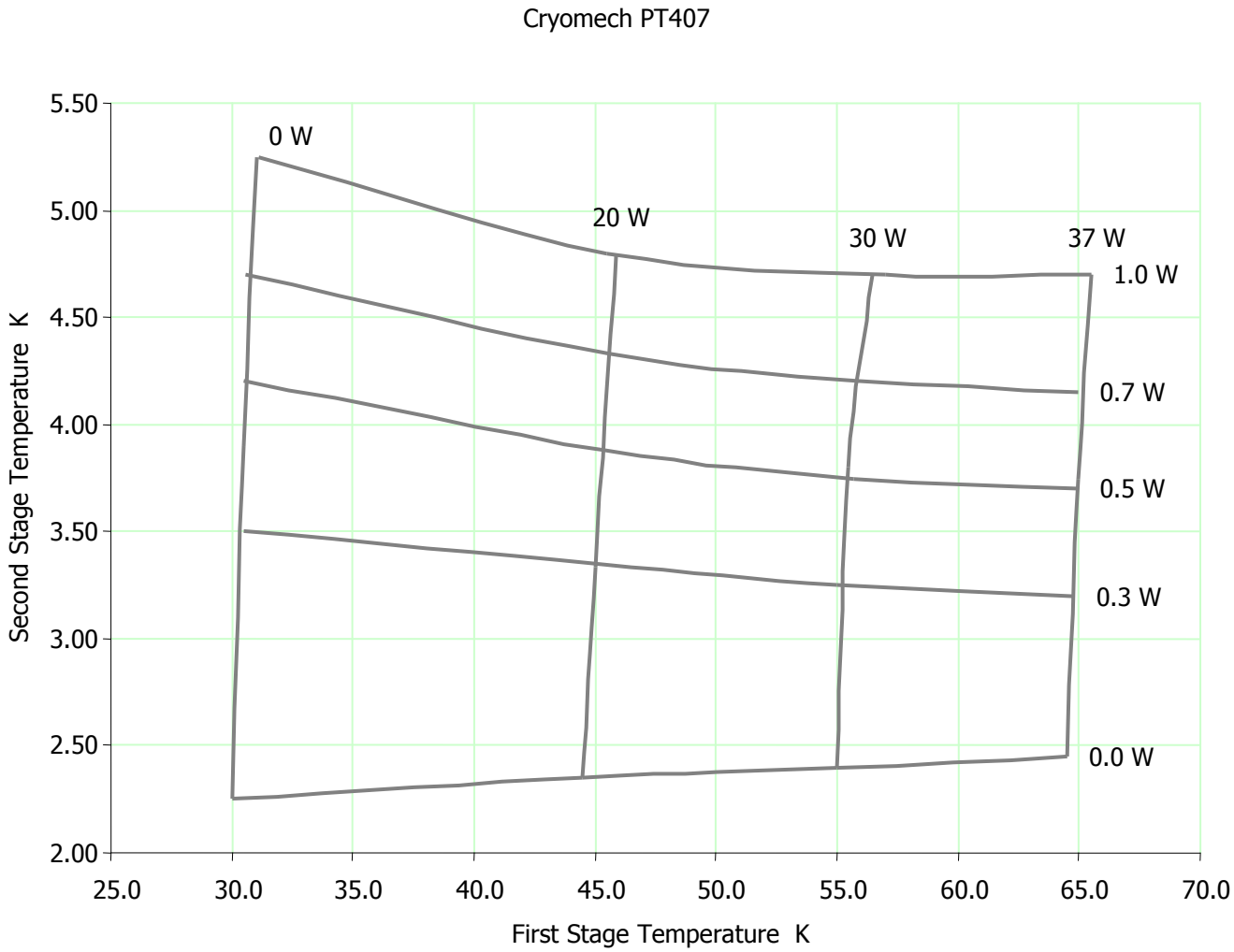

© Monroe Brothers Ltd 2012. Please do not reproduce without the permission of the author.

Two Stage Cooler Capacity Curves

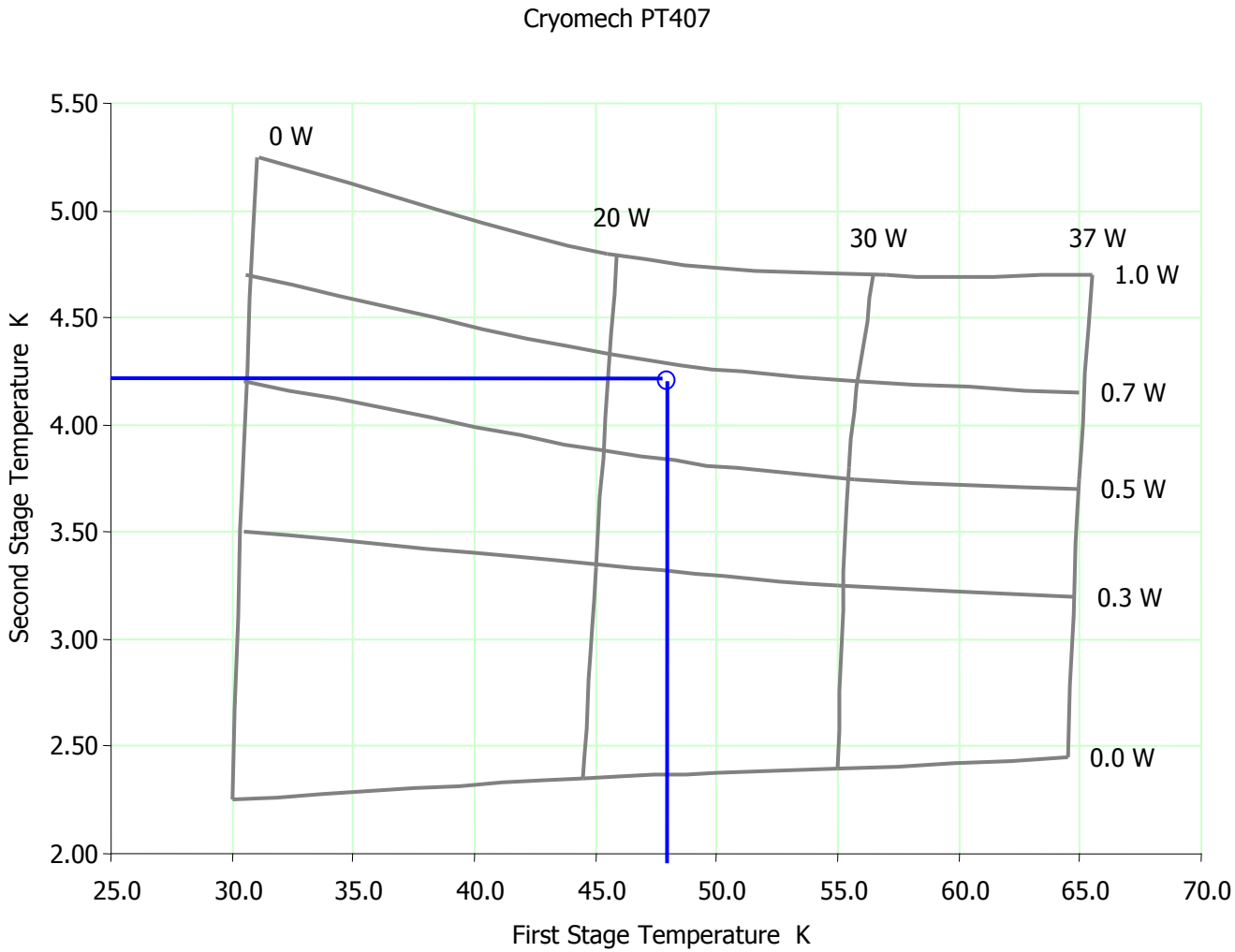

© Monroe Brothers Ltd 2012. Please do not reproduce without the permission of the author.

Two Stage Cooler Capacity Curves

Cryomech PT407

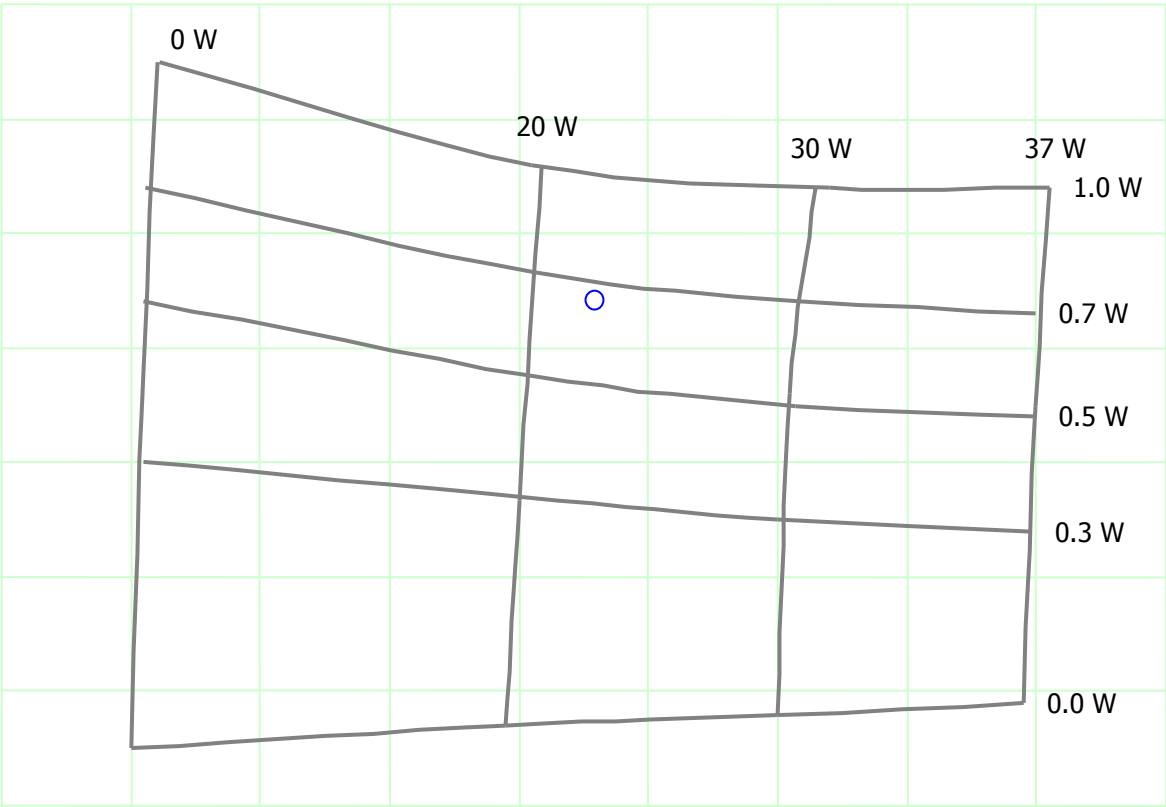

© Monroe Brothers Ltd 2012. Please do not reproduce without the permission of the author.

Two Stage Cooler Capacity Curves

Cryomech PT407

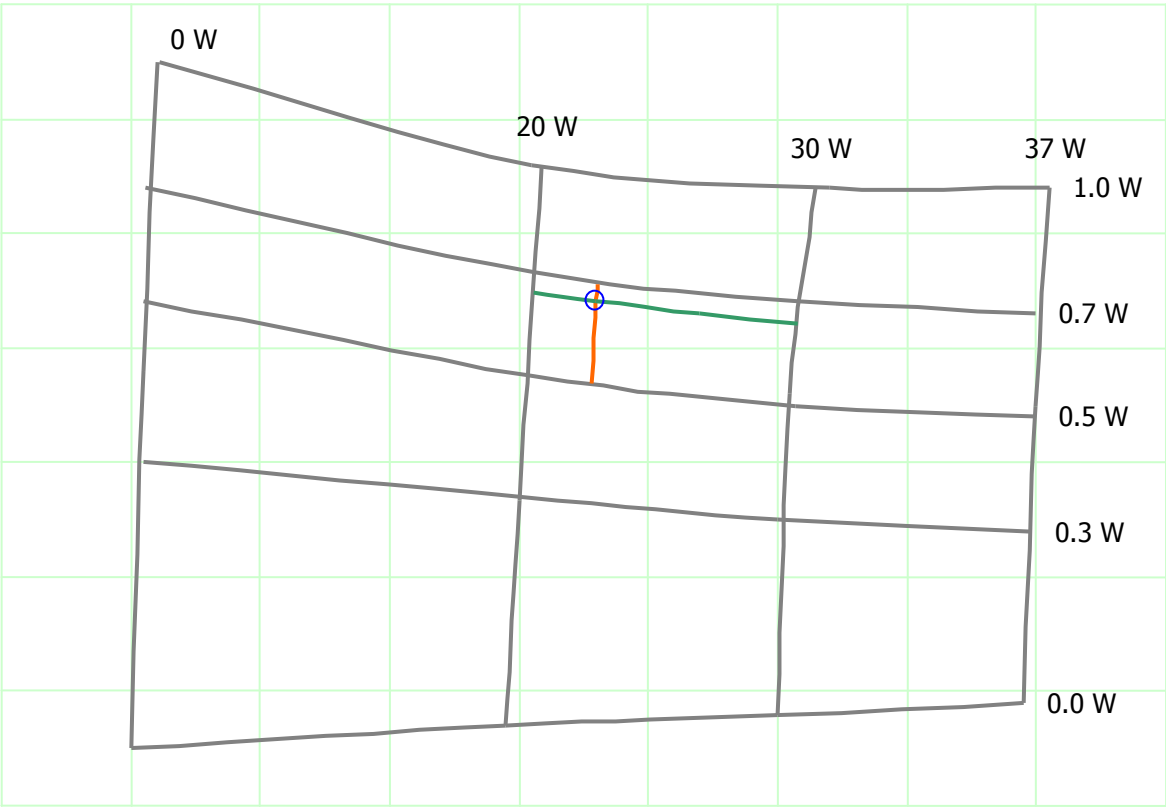

23 W at 48 K and 0.65 W at 4.2 K

© Monroe Brothers Ltd 2012. Please do not reproduce without the permission of the author.

Cryocoolers versus Helium Liquefiers

	Cryocooler		Liquefier	
Equipment Cost	Liquefier	$ 40 k	Liquefier	$ 1 000 k
Infrastructure	Cryostat mounting	$ 40 k		
			Dewar	$ 50 k
			Transfer lines	$ 100 k
			Valve Box	$ 100 k
			Infrastructure	$ 200 k
TOTAL		$ 80 k		$ 1 500 k

© Monroe Brothers Ltd 2012. Please do not reproduce without the permission of the author.

Zero Loss and Cryogen Free

Zero Loss	Cryogen inventory Coldhead recondenses cryogens
Cryogen Free	No cryogen inventory Coldhead connects directly to the system

© Monroe Brothers Ltd 2012. Please do not reproduce without the permission of the author.

Advantages of Cryocoolers

Zero Loss

⇨ Independent of cryogen supply

Cryogen Free

⇨ Reduced fabrication cost

⇨ Reduced pressure vessel coding requirements

⇨ Simplified pressure relief

So what is holding back the applications?

© Monroe Brothers Ltd 2012. Please do not reproduce without the permission of the author.

Technical Challenges

- ⇨ Limited power
- ⇨ Thermal links
- ⇨ Point heat loads
- ⇨ Magnet quenching
- ⇨ Cryocooler maintenance & loss of performance
- ⇨ Lack of countercooling
- ⇨ HTSC leads
- ⇨ Undercooling (? zero loss systems only)
- ⇨ Vibration

© Monroe Brothers Ltd 2012. Please do not reproduce without the permission of the author.

Cryocoolers

- Cooling powers up to 1.5 W at 4 K
  40 W at 45 K
- HTSC leads
- Cryostats with zero boil-off
- Systems with no inventory of cryogens

Sumitomo SRDK-415D

Images courtesy of Sumitomo Heavy Industries Cryogenics Group

© Monroe Brothers Ltd 2012. Please do not reproduce without the permission of the author.

Typical Load Map of 4K-GM (50Hz)

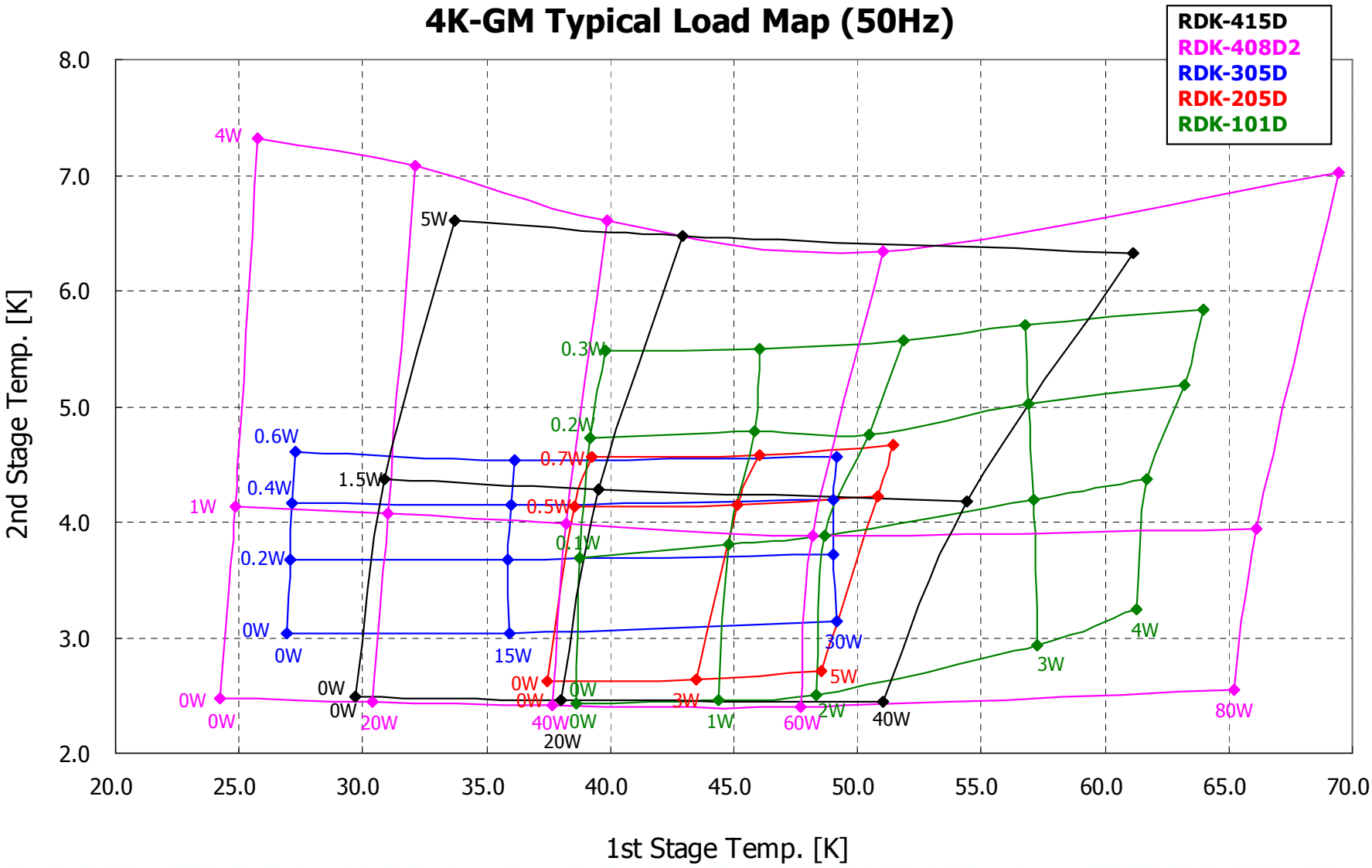

Typical Load Map of 4K-GM (60Hz)

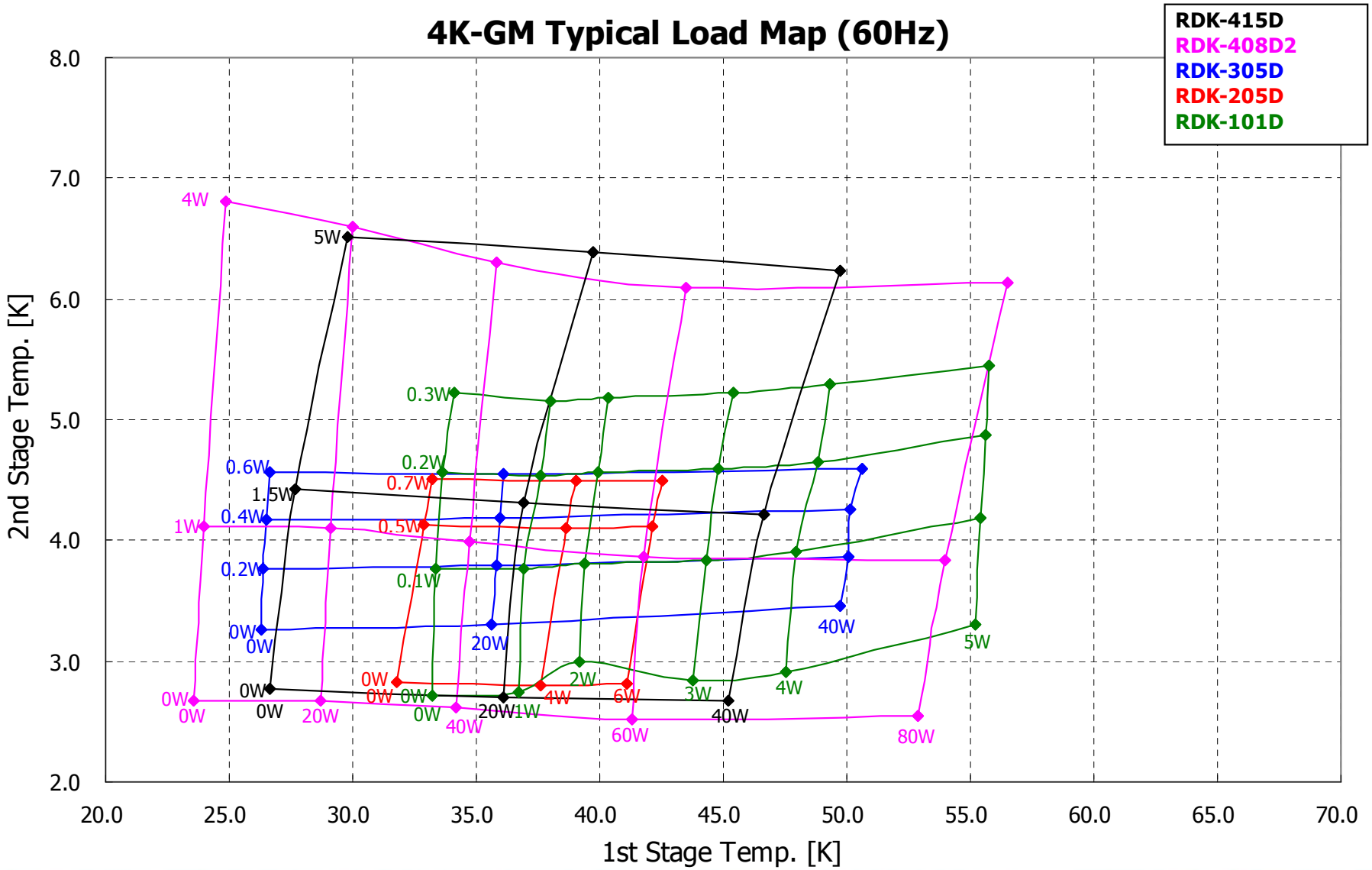

Cryocoolers

- Cooling powers up to 1.5 W at 4 K
  40 W at 45 K
- HTSC leads
- Cryostats with zero boil-off
- Systems with no inventory of cryogens

Cryomech PT410

© Monroe Brothers Ltd 2012. Please do not reproduce without the permission of the author.

Cryocoolers for HTS

- Useful cooling between from 20 K upwards
- Cryomech
- Dry systems or Zero Loss (wet systems)
- Other suppliers

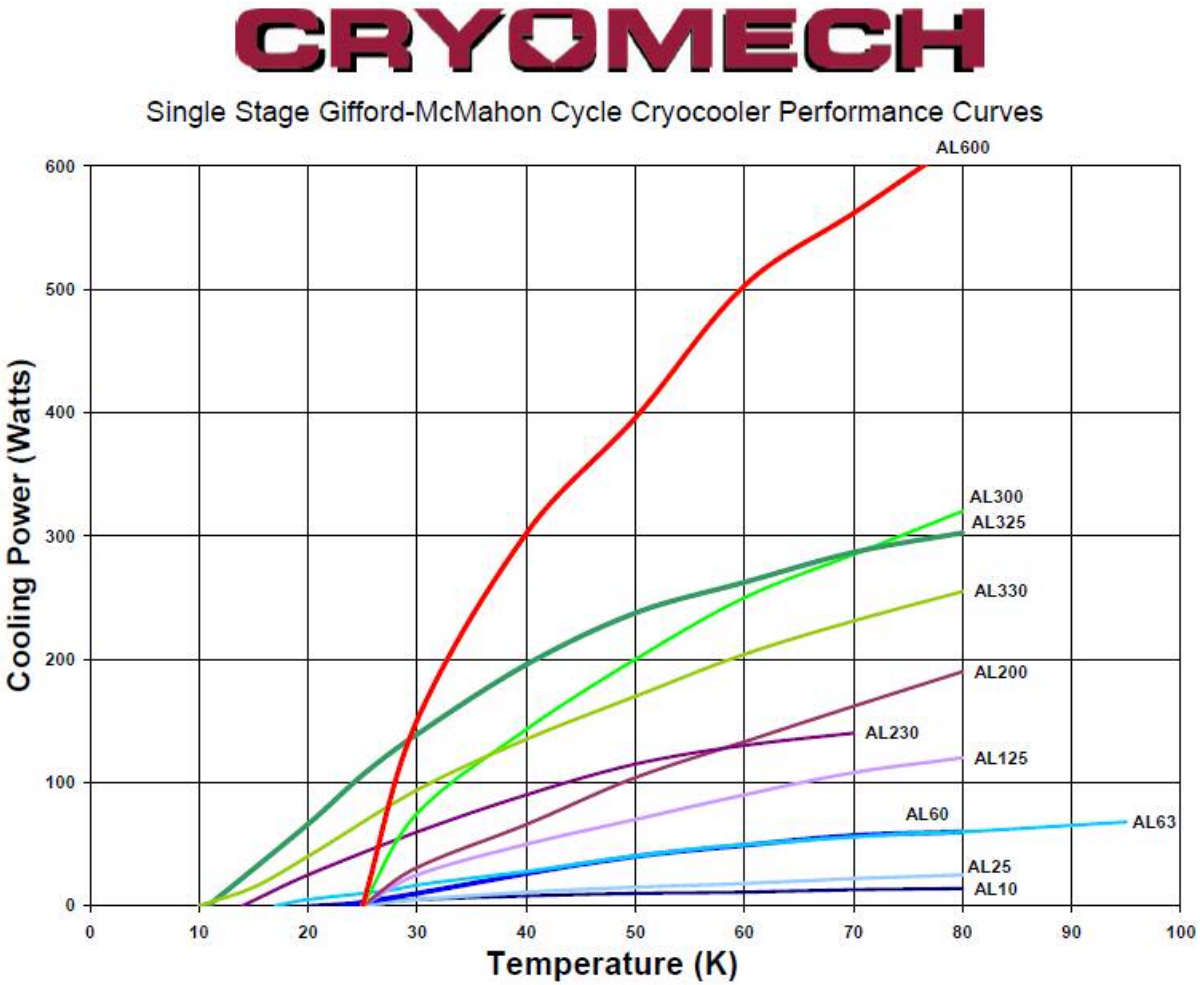

© Monroe Brothers Ltd 2012. Please do not reproduce without the permission of the author.

Cryogens, Cryoolers & HTS Applications

Cryogen coolant: Easier to design and build than a dry system

Useful working temperature of the currently available HTS:

- ⇨ Above 20K
  Ccryocoolers are providing useful cooling powers;
- ⇨ Below 60 K
  Warmer than this, the useful performance of HTS's is disappearing.

Unfortunately nature has not given us a working cryogen between 40 K and 60 K

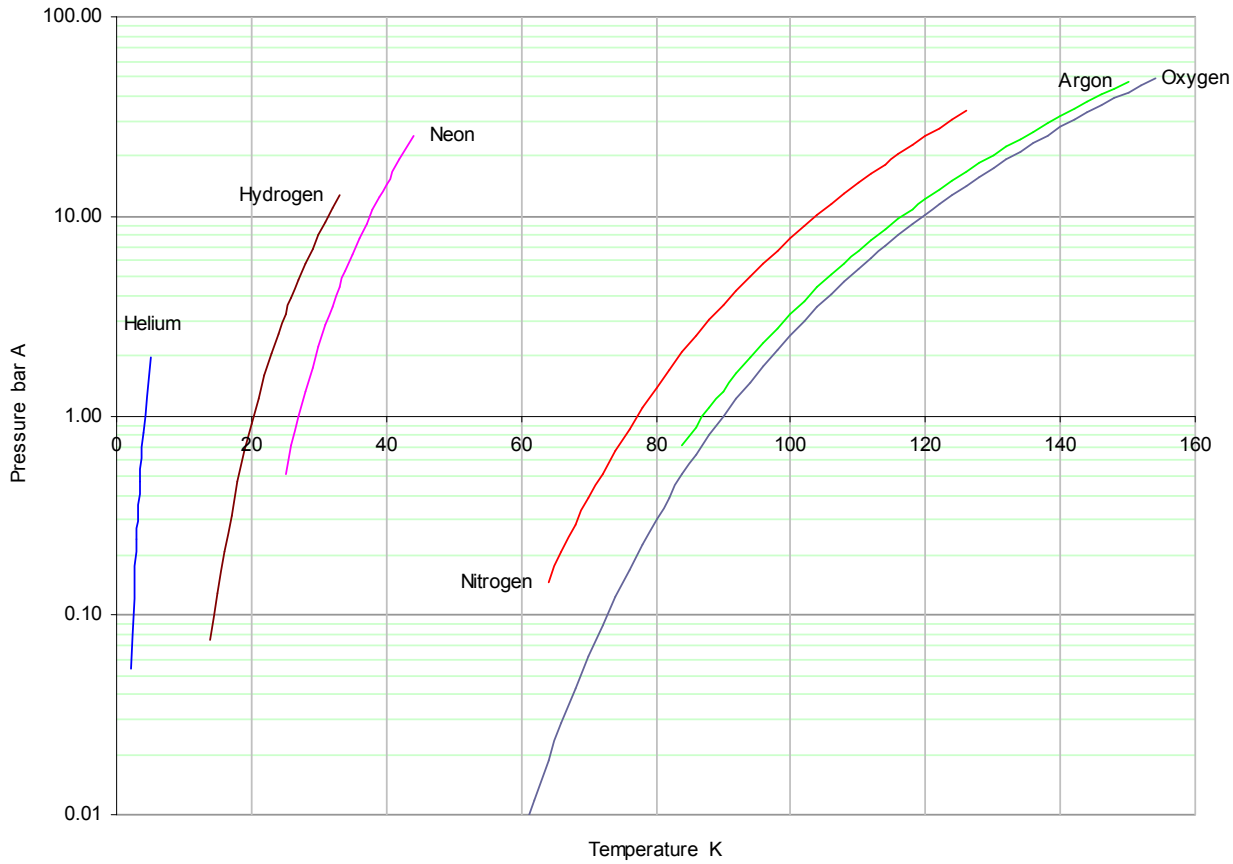

© Monroe Brothers Ltd 2012. Please do not reproduce without the permission of the author.

Wiggler Magnet

- Four two stage cryocoolers

  2 radiation screens

  Recondensing helium

- 3 W at 4.2 K

Image courtesy of Diamond Light Source Ltd

© Monroe Brothers Ltd 2012. Please do not reproduce without the permission of the author.

Wiggler Magnet

Cryocooler Design Principle:

Go for broke!

If the heat loads exceed the cryocooler capacity then remedial work is VERY difficult.

The design has to minimise the heat loads without countercooling

Image courtesy of Diamond Light Source Ltd

© Monroe Brothers Ltd 2012. Please do not reproduce without the permission of the author.

Costs

	Superconducting RF Cavities (3 Cavities)	Low Loss NMR Magnet Small	Low Loss NMR Magnet Large	Wiggler Magnet
Heat load	350 W	15 mW	150 mW	3 W
Evaporation rate		20 cc / hr	200 cc / hr	4 300 cc / h
Bulk liquid helium	$ 7.50 per litre	$ 30 per litre	$ 15 per litre	$ 7.50
	$ 30 million pa !	$ 5 700 pa	$ 26 000 pa	$ 280 000 pa
Cryocoolers		$ 30 000	$ 50 000	$ 180 000
Electricity		4 kW	6.5 kW	26 kW
Electricity		$ 6 300 pa	$ 10 200 pa	$ 41 000 pa
Maintenance		$ 10 000 pa	$ 13 500 pa	$ 46 000 pa
Total		$ 16 000 pa	$ 24 000 pa	$ 90 000 pa
Refrigerator	$ 4 000 000 plus			Transfer lines $ 200 000
Electricity	200 kW			
Electricity	$ 320 000 pa			
Maintenance	$ 80 000 pa			
Total	$ 400 000 pa			$ 50 000 pa
	Refrigerator	Bulk	Bulk / Cryocoolers	Cryocoolers (Refrigerator)
		Noise - Reliability of Supply		

© Monroe Brothers Ltd 2012. Please do not reproduce without the permission of the author.

Technology

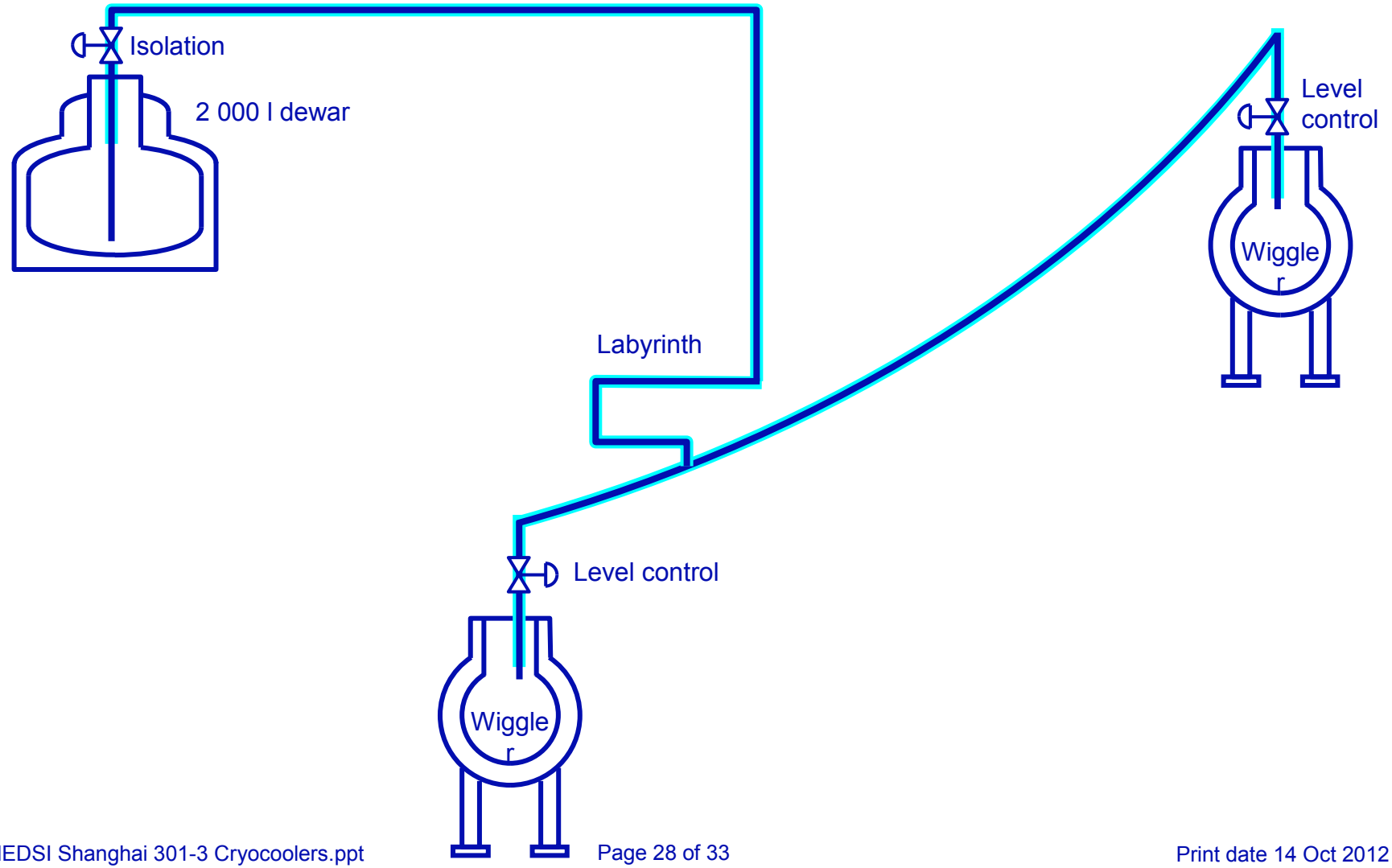

© Monroe Brothers Ltd 2012. Please do not reproduce without the permission of the author.

Technology

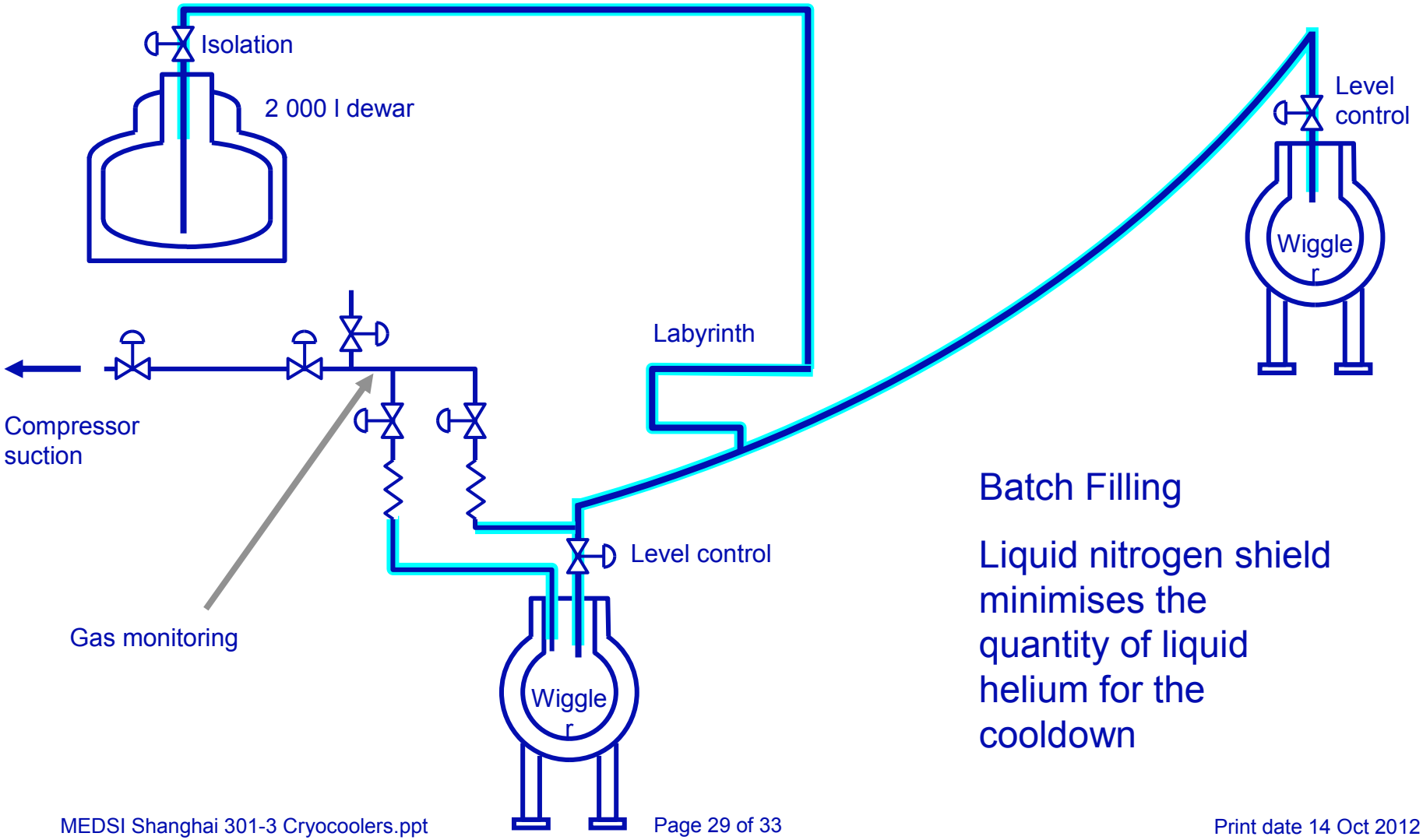

Batch Filling

Liquid nitrogen shield minimises the quantity of liquid helium for the cooldown

© Monroe Brothers Ltd 2012. Please do not reproduce without the permission of the author.

Technology

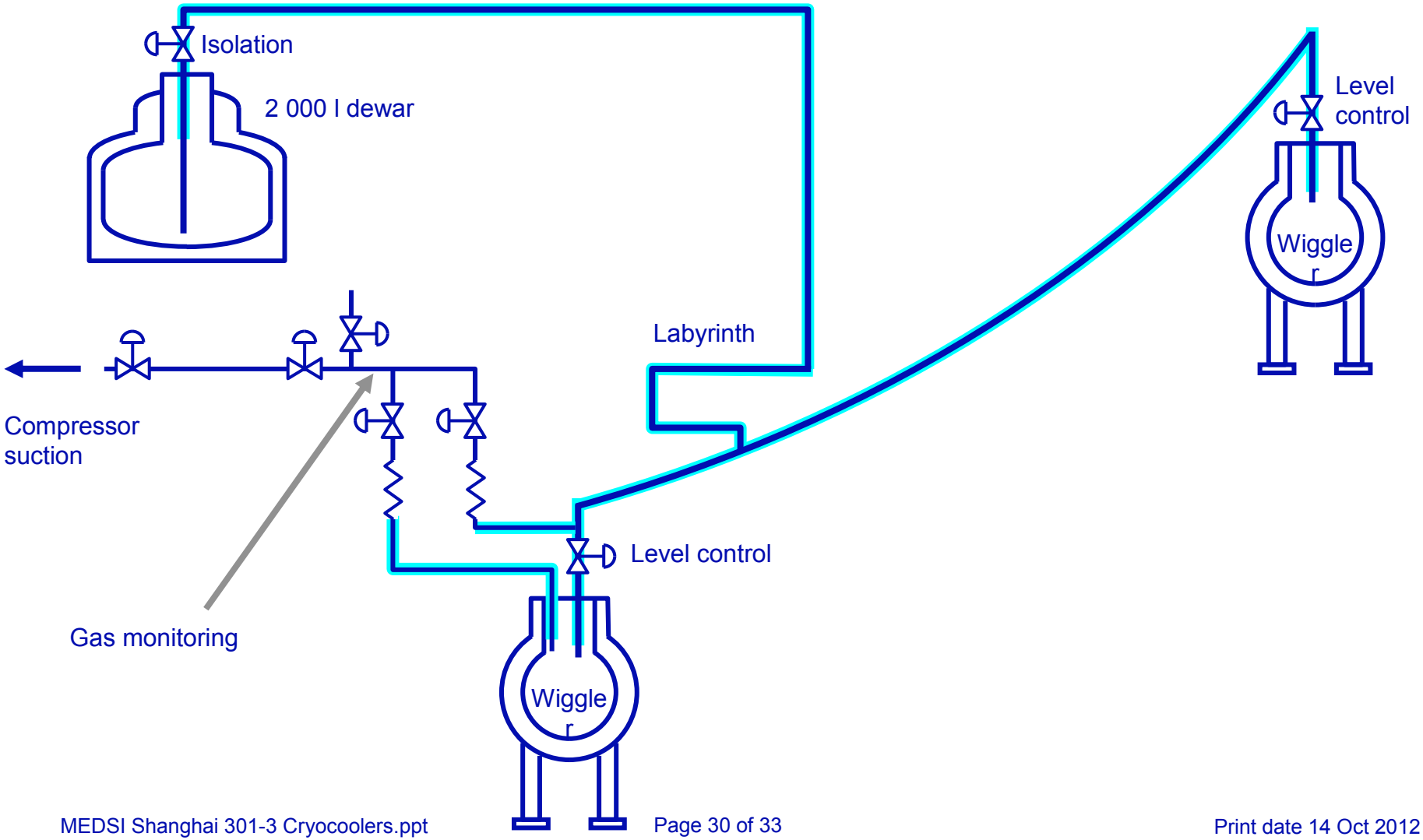

© Monroe Brothers Ltd 2012. Please do not reproduce without the permission of the author.

Cost Evaluation

Transfer lines from a liquefier or dewar batch filled from the liquefier

		Transfer lines to Liquefier	Cryocoolers
Transfer lines	100 m	$ 150 k	
Other equipment		$ 50 k	
Total Equipment Cost		$ 200 k	$ 180 k
Running Costs			
Helium consumption	4 litres / hr at $ 1.50 per litre	$ 50 k pa	
Cryocoolers	Electricity, maintenance, water		$ 90 k pa

Other Considerations

⇨Real marginal cost of liquid helium

⇨Convenience of factory test, site test commissioning a unit with cryocoolers

© Monroe Brothers Ltd 2012. Please do not reproduce without the permission of the author.

Introduction

⇨ Introduction	- Monroe Brothers Ltd - Structure of the talk
⇨ Principles of Refrigeration	- Carnot efficiency - Real Efficiency - Costs
⇨ Refrigeration Systems	- Main components - Cold Box operation
⇨ Superconducting RF cavities	- Cooling requirements - Valve Box & transfer lines - Control
⇨ Other Cooling Requirements	- Cryocoolers - Economics versus practicalities

© Monroe Brothers Ltd 2012. Please do not reproduce without the permission of the author.

Finish

© Monroe Brothers Ltd 2012. Please do not reproduce without the permission of the author.