MEDSI 2004 Tutorial

FLEXURES - THE USE OF ELASTICITY IN SR INSTRUMENTS DESIGN

Saša Zelenika
Paul Scherrer Institut (CH) – Division of ME Sciences
E-mail: sasa.zelenika@psi.ch
University of Rijeka (HR) – Faculty of Engineering
E-mail: sasa.zelenika@riteh.hr

Grenoble, May 24th 2004

Outline of presentation

- Why high precision?
- Basic terminology in high precision positioning
- Sliding and rolling devices
- Compliant devices
- Theoretical analysis of mechanisms based on spring-strips
- Experimental assessment of the behavior of spring-strip mechanisms
- Flexural hinges
- Examples of application of compliant mechanisms
- Conclusions

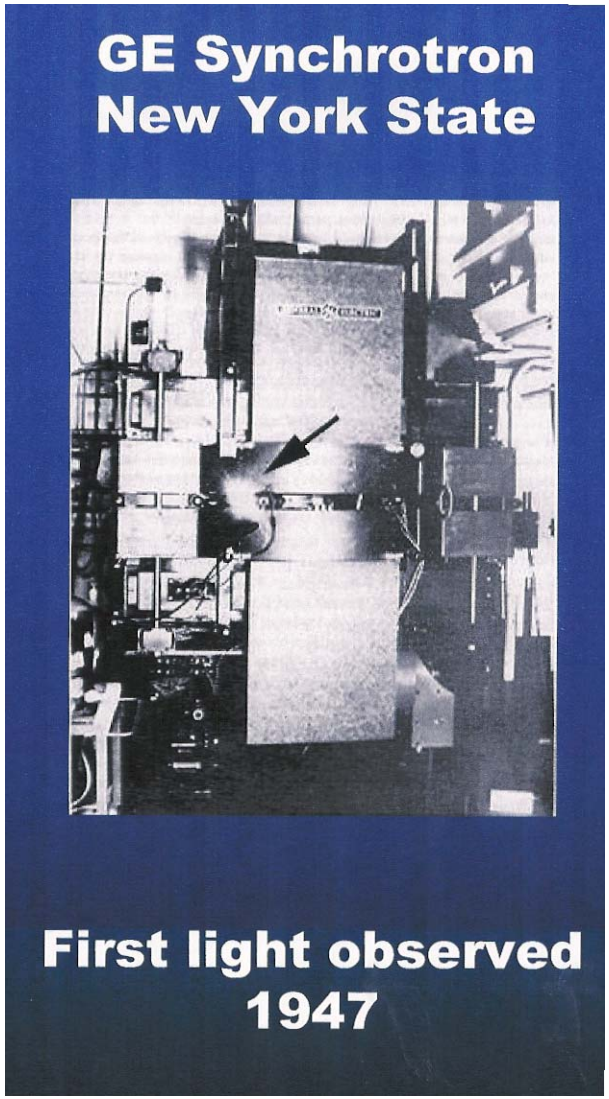

Applications of synchrotron radiation (from "Synchrotron Radiation", HASYLAB).

Wavelength (Å) 1 Å = 10^{-10} m	Photon energy (eV)	BIOLOGY / MEDICINE	CHEMISTRY	PHYSICS	TECHNOLOGY
SLS	0,1 Infrared	Biochemistry	Catalytic Processes		New Spectro-scopical Methods (Intensity, Tunability, Resolution)
	1 Visible	Biophysics	Photochemistry		
1000	10 UV	UV/X-Ray Microscopy	Electron Spectro-scopy for Chemical Analysis	Atomic/Molecular Physics	
100	100 Vacuum UV	Radiography	Investigation of Radiation Damage	Band Structure of Solids, Surfaces and Interfaces	High-Power Optics
10	1000 Soft X-Rays	Structure Determination of Complex Molecules	Structure Determination of Polymers	Photoelectron Spectroscopy of Surface Structures	X-Ray Microscopy, Lithography (LIGA)
1	10000 Hard X-Rays	X-Ray Angiography and Tomography	Trace Analysis	X-Ray Optics for Microscopy, Lithography, and Crystallography	
0,1	100000 γ Rays			X-Ray Scattering and Fluorescence	Radiography
				Compton Scattering	

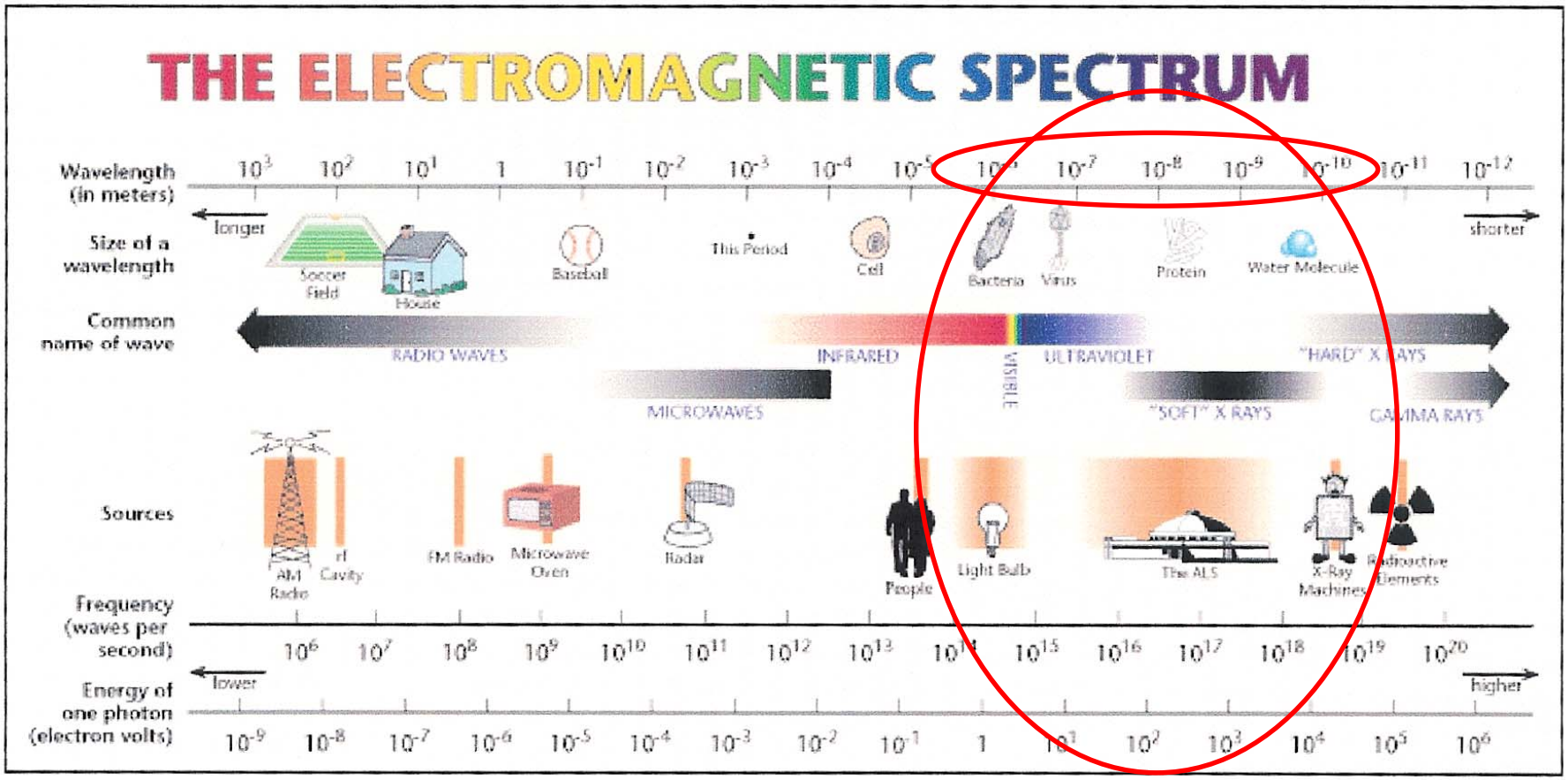
THE ELECTROMAGNETIC SPECTRUM
Wavelength (in meters)
longer
shorter
Size of a wavelength
Soccer Field
House
Baseball
This Period
Cell
Bacteria
Virus
Protein
Water Molecule
Common name of wave
RADIO WAVES
INFRARED
VISIBLE
ULTRAVIOLET
"HARD" X RAYS
MICROWAVES
"SOFT" X RAYS
GAMMA RAYS
Sources
AM Radio
rf Cavity
FM Radio
Microwave Oven
Radar
People
Light Bulb
The ALS
X-Ray Machines
Radioactive Elements
Frequency (waves per second)
lower
higher
Energy of one photon (electron volts)

SLS

X06S (PX) 1st mono crystal

Y_1 – translation along the beam

Actuator	Stepping motor
Motion range	0 – 200 mm*
Ideal resolution	0.2 µm (full step)
Resolution	1µm
Velocity	2.5 mm / s
Absolute accuracy	0.1 mm**
Repeatability	2 µm
Backlash	6µm
Yawing	5″
Pitching	10″ 1″ / 5 mm**
Rolling	10″
Encoder	Linear motion sensor***

θ_1 – fine Bragg angle adjustment

Actuator	Stepping motor
Drive mechanism	Sine bar pushed by translation stage
Motion range	-1° – 22° 1)
Ideal resolution	0.1 ″ (full step)
Velocity	0.15 ° / s
Resolution	0.05 ″ 2, 3)
Accuracy for 0.5 ° scan	± 0.1 ″ 3)
Accuracy for 6 ° scan	± 1 ″
Crystal yawing	± 0.1 ″ 3)
Axial wobble and surface runout	1 µm
Encoder	optional 4)

X04S (MS) mono

Bragg angle range	:	2.5° ~ 50°
Mechanically possible angles	:	-5° ~ 50° 1)
Guidance method	:	precision bearings
Drive mechanism	:	worm & worm wheel
Actuator	:	AC servomotor
Ideal resolution	:	0.1″/step
Resolution	:	1″ 2)
Repeatability	:	2″ 3)
Absolute accuracy	:	30″ 4)
Radial runout	:	5µm
Rotation axis wobble	:	3″ 5)
Rotation axis stiffness	:	0.05″/kg·cm 6)
Maximum velocity	:	0.3°/s 7)
Position reading	:	incremental encoder HEIDENHAIN ERO725, 1″ reading together with 1° scale plate
Vacuum sealing	:	magnetic fluid seal
Other features	:	cooling tubes led through the hollow principal axis shaft; momentum load cancel mechanism

ELETTRA

OPTICAL LAYOUT OF BEAMLINE ENEA

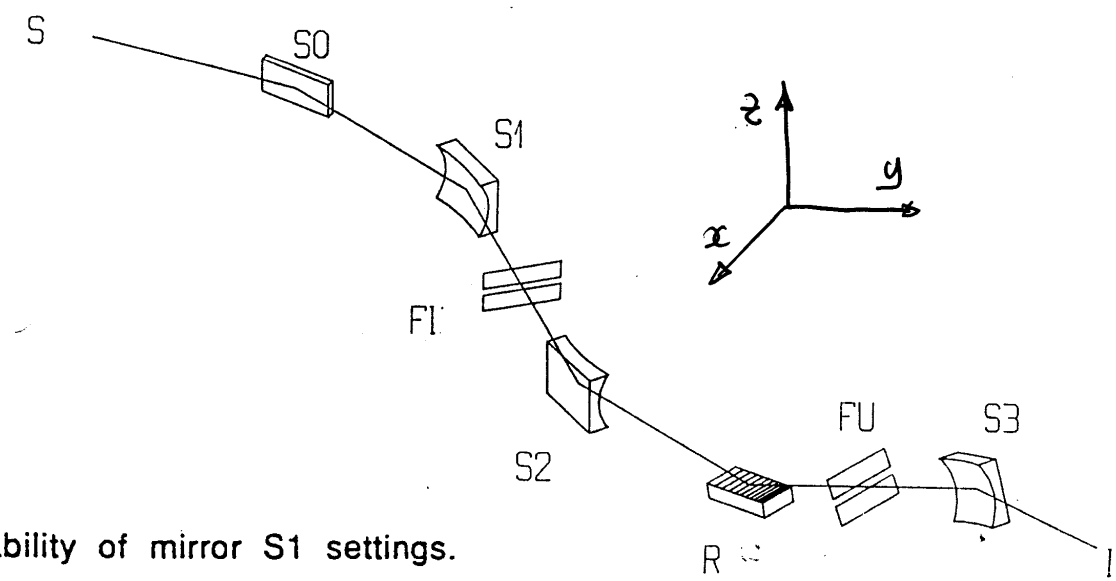

Required stability of mirror S1 settings.

Δx	Δy	Δz	Δx'	Δy'	Δz'
1 µm	10 µm	2 µm	0.7"	3.6"	3.6"

Stability requirements for the refocusing mirror.

Δx	Δy	Δz	Δx'	Δy'	Δz'
0.5 µm	10 µm	2 µm	0.7"	1.8"	3.6"

⇒ The alignment, stability and repeatability requirements for the the optical elements of 3rd generation SR optics manipulation devices are in the 100 nm and 0.5 μrad range, while new developments such as the micro focusing of the beams, the XFELs (straight trajectory in an undulator < 10 μm over 100 m),… make these requirements even more stringent → the adopted solutions are very similar to those employed in micro- and nano-technologies

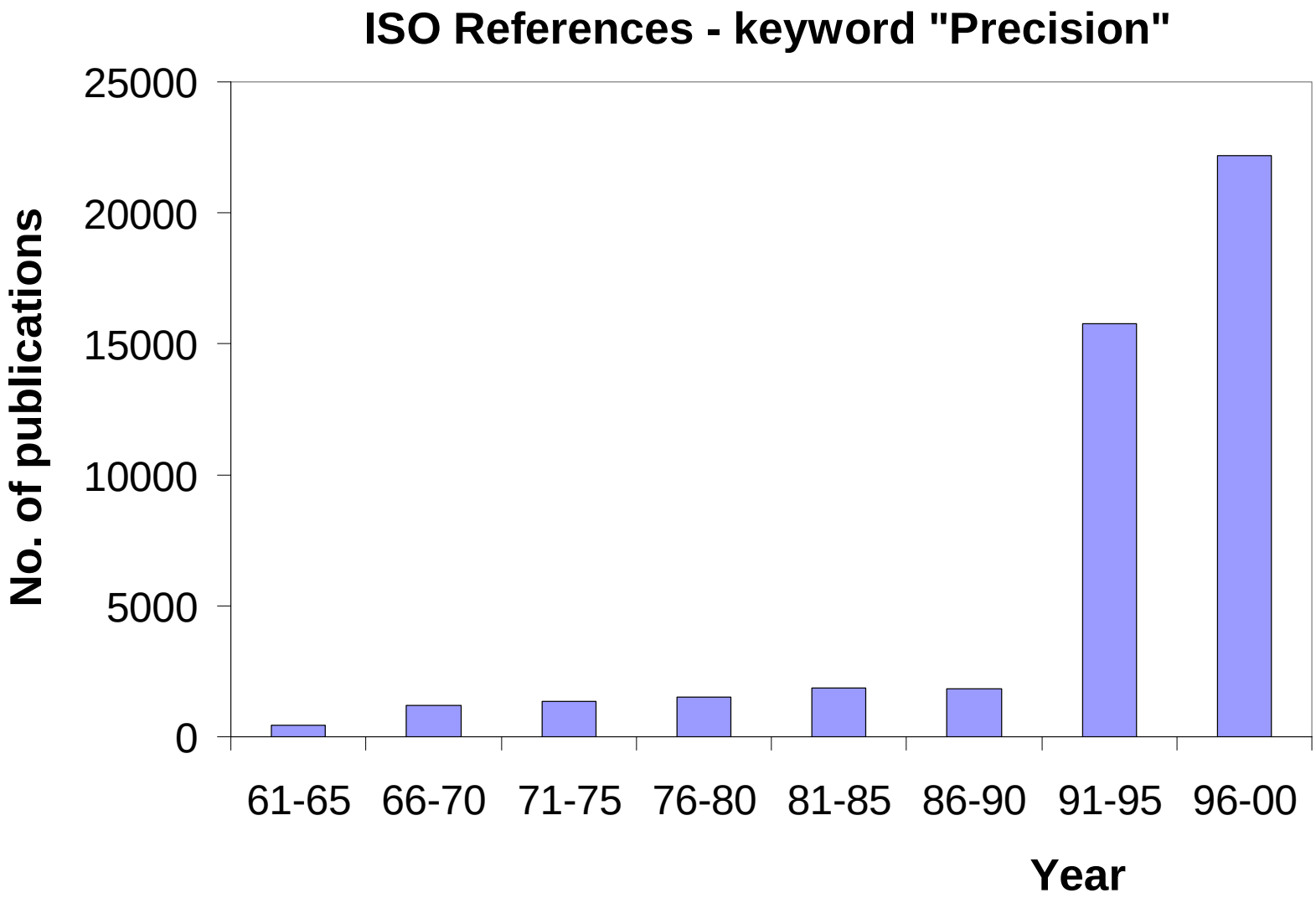

cf. EUSPEN & 6th FP – EU; ASME, ASPE – USA; JSPE – J;
Precision Engineering, J. Micromech. & Microeng.;
ME Dept. @ MIT, EPFL – CH, …

<1987.: 5.25” floppy with ≤ 1.2 MB → 3.5” floppy: ≤ 1.44 MB → CD: ≤ 700 MB → DVD: ≤ 5 GB

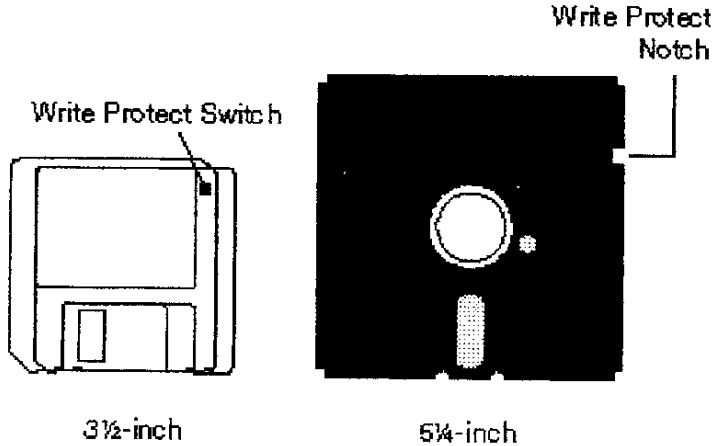

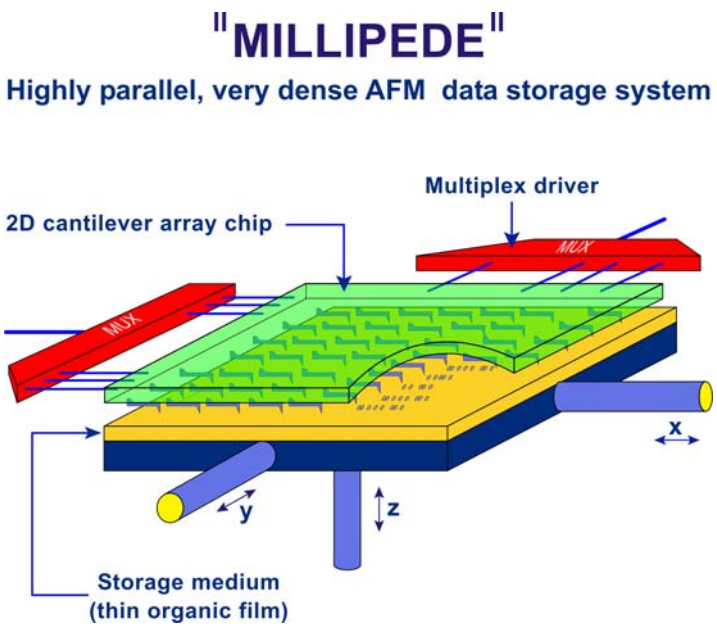

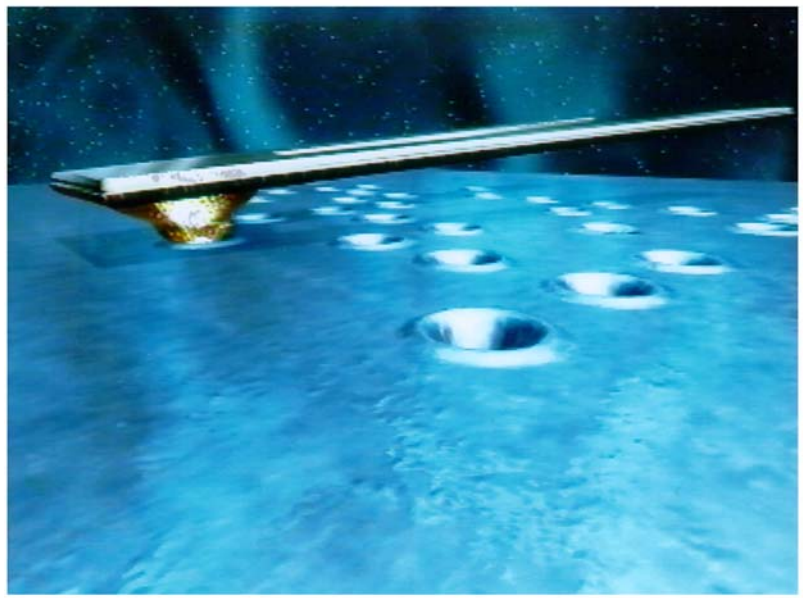

“MILLIPEDE” [IBM Zürich]: 64 x 64 0.3 µm thick and 70 µm long cantilevers ⇒ 1 Tbit/in^2 ‘stamp’ → several movies on a ‘disk’

Miniature robot for machining and quality control of surfaces with nm resolution

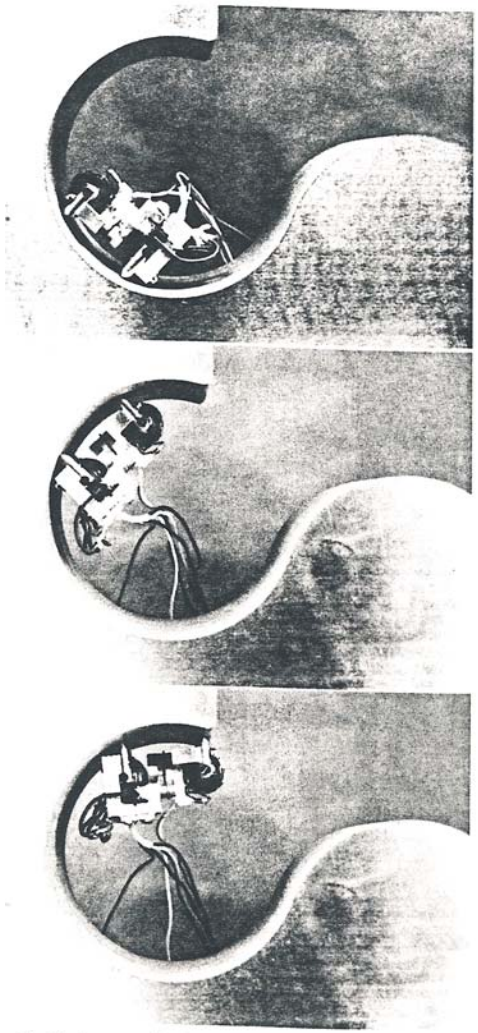

Miniature walking machine on S-curved surface.

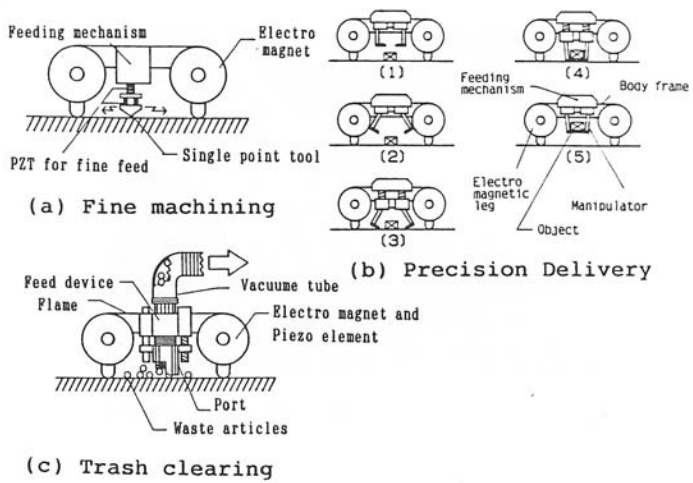

Fig.9 Instances of precision working

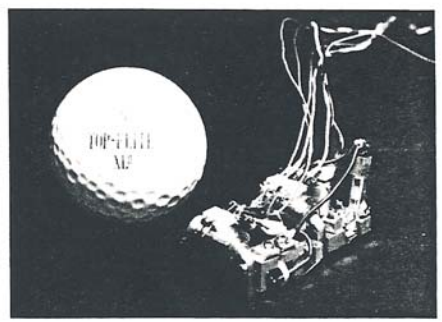

Fig.10 Miniature robot for surface roughness measurement.

[Aoyama et al., IP Prec. Eng., 1993]

ACHIEVABLE 'MACHINING' ACCURACY

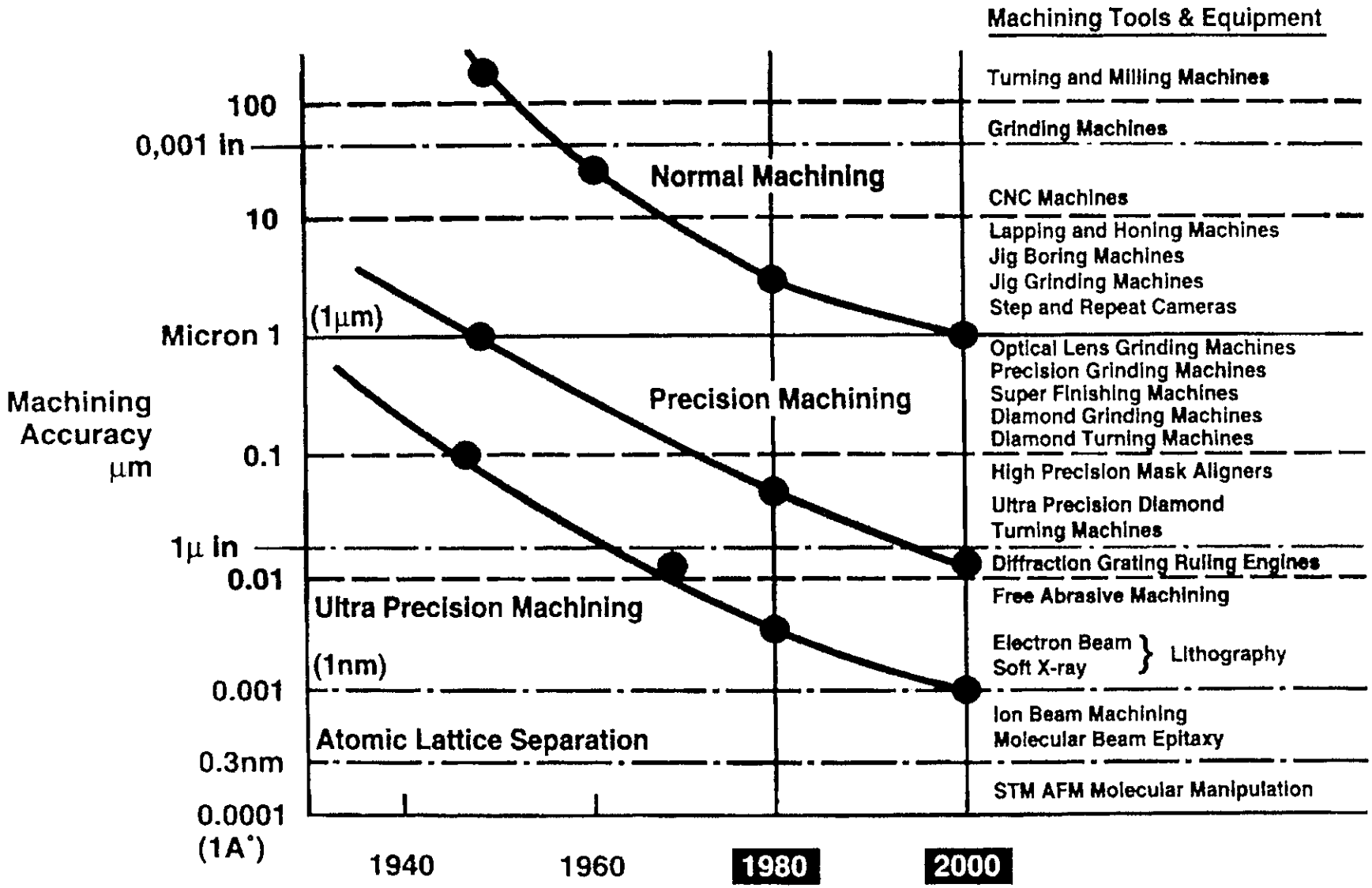

[McKeown, EUSPEN, 2000]

McKeown [5] after Taniguchi [1]

ME Problems by High Precision Manufacturing and by Handling and Assembly of Micro-components

⇒ Compensation of environmental effects (e.g. therm. dilatations)

⇒ Active vibration control

⇒ Precision positioning and 3D compensation of positioning errors of machining tools with respect to pieces, of measuring and optical devices, of IT peripheral devices, …

⇒ Design of machines with highly precise and reproducible (predictable) position, velocity and acceleration profiles

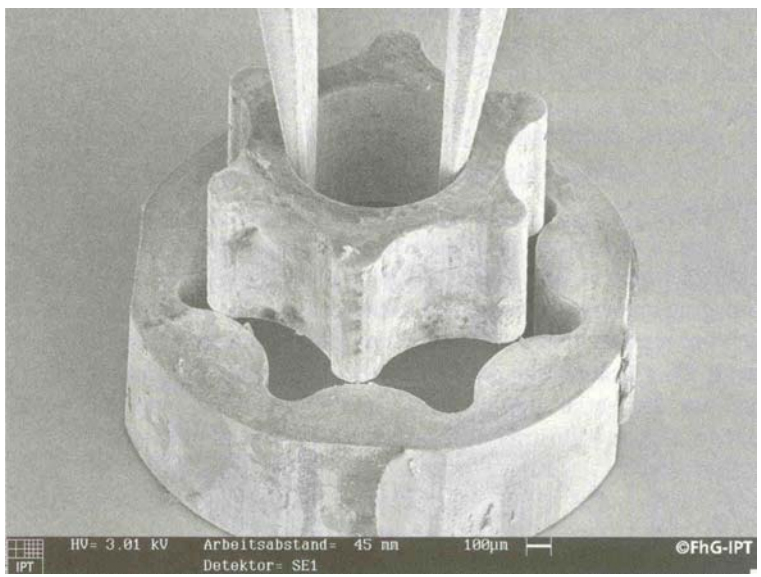

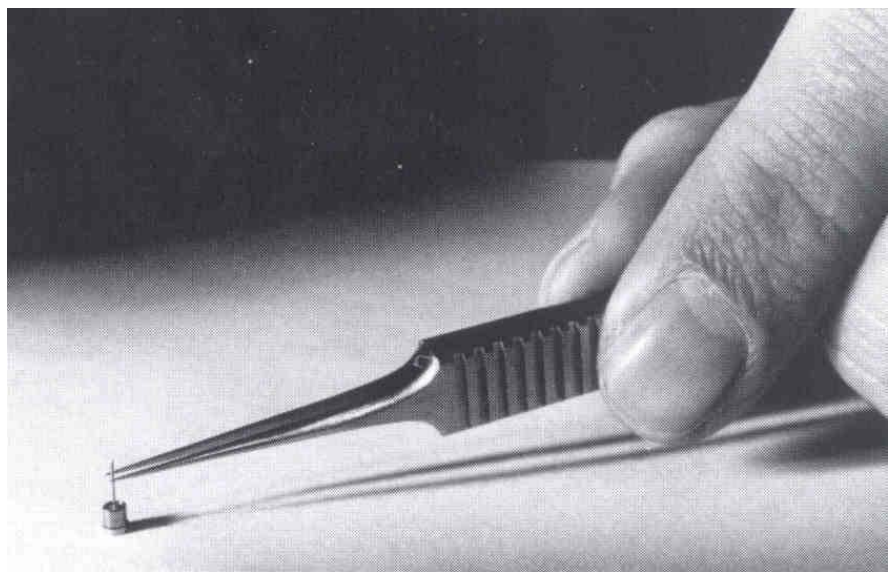

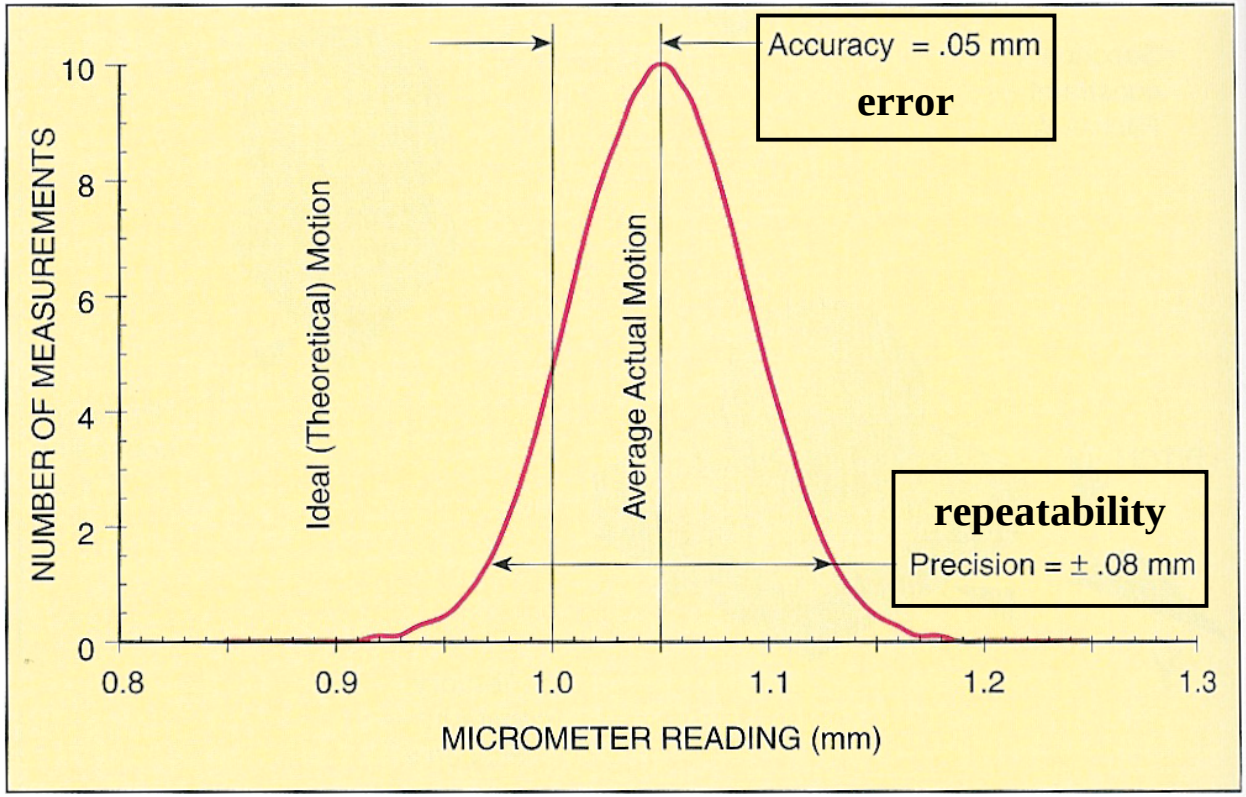

[Slocum, Prec. Machine Design, Prentice Hall, 1992]

BASIC TERMS:

Resolution: value of smallest resolvable displacement (step) of the component; it differs from the resolution of the measurement

Accuracy (error): difference between the (mean) actual motion and the ideal displacement of the device

Repeatability (precision): range of deviations of the actual displacement for the same nominal (imposed) displacement

SLIDING AND ROLLING MECHANISMS

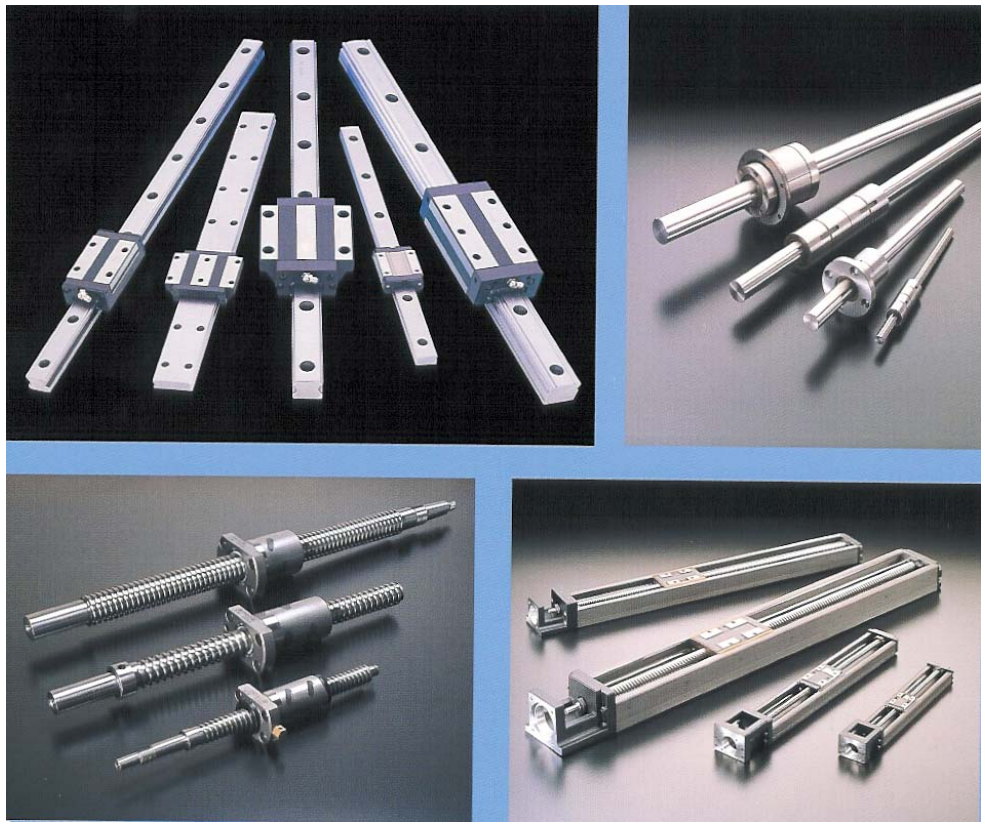

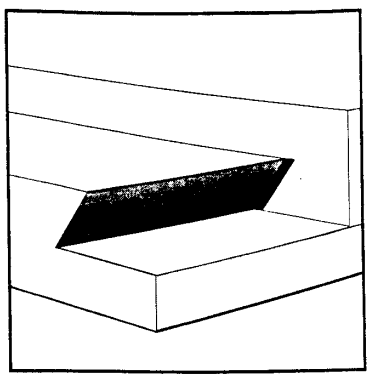

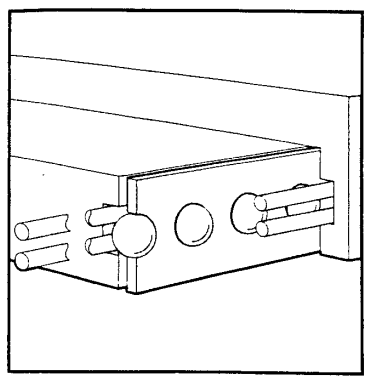

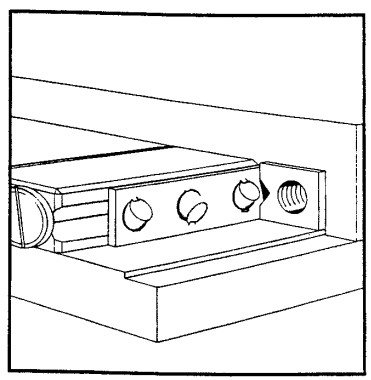

Random error motions of linear rolling guides

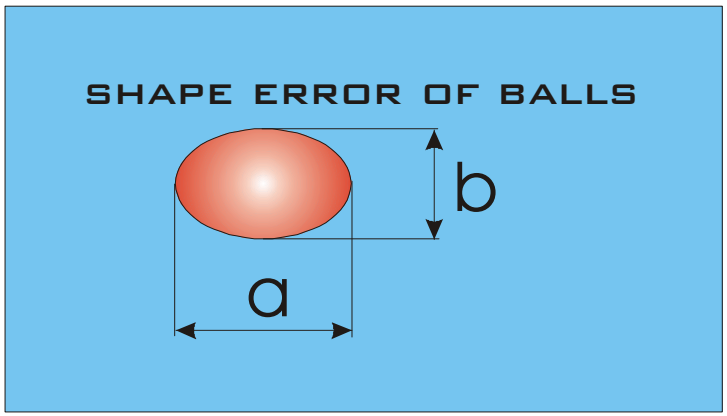

s(a,b,c,d)
a-b=1µm
c,d= 1...3 µm

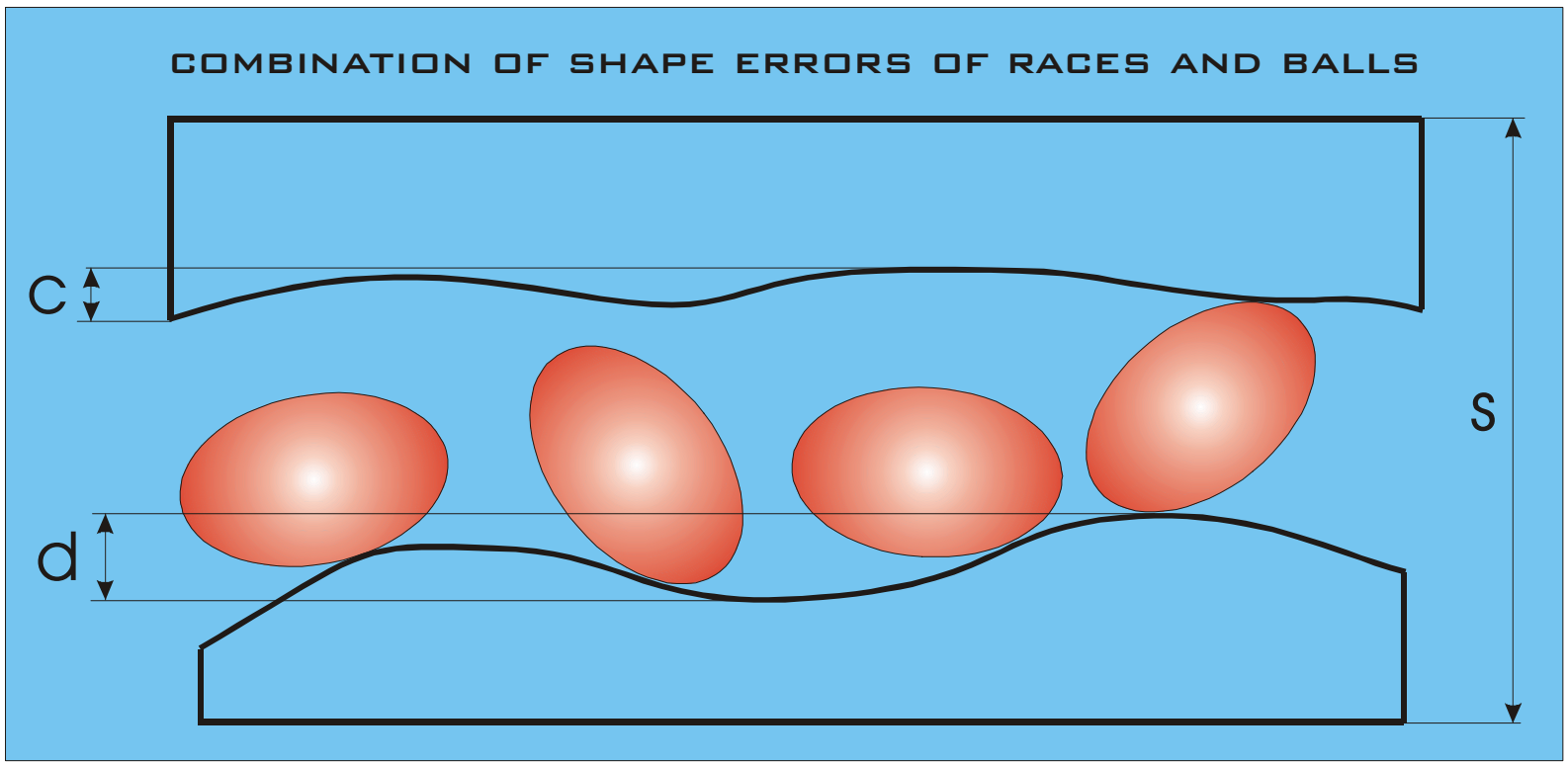

[Courtesy T. Noll, BESSY, Berlin]

Motion in 1 direction creates 5 parasitic motions

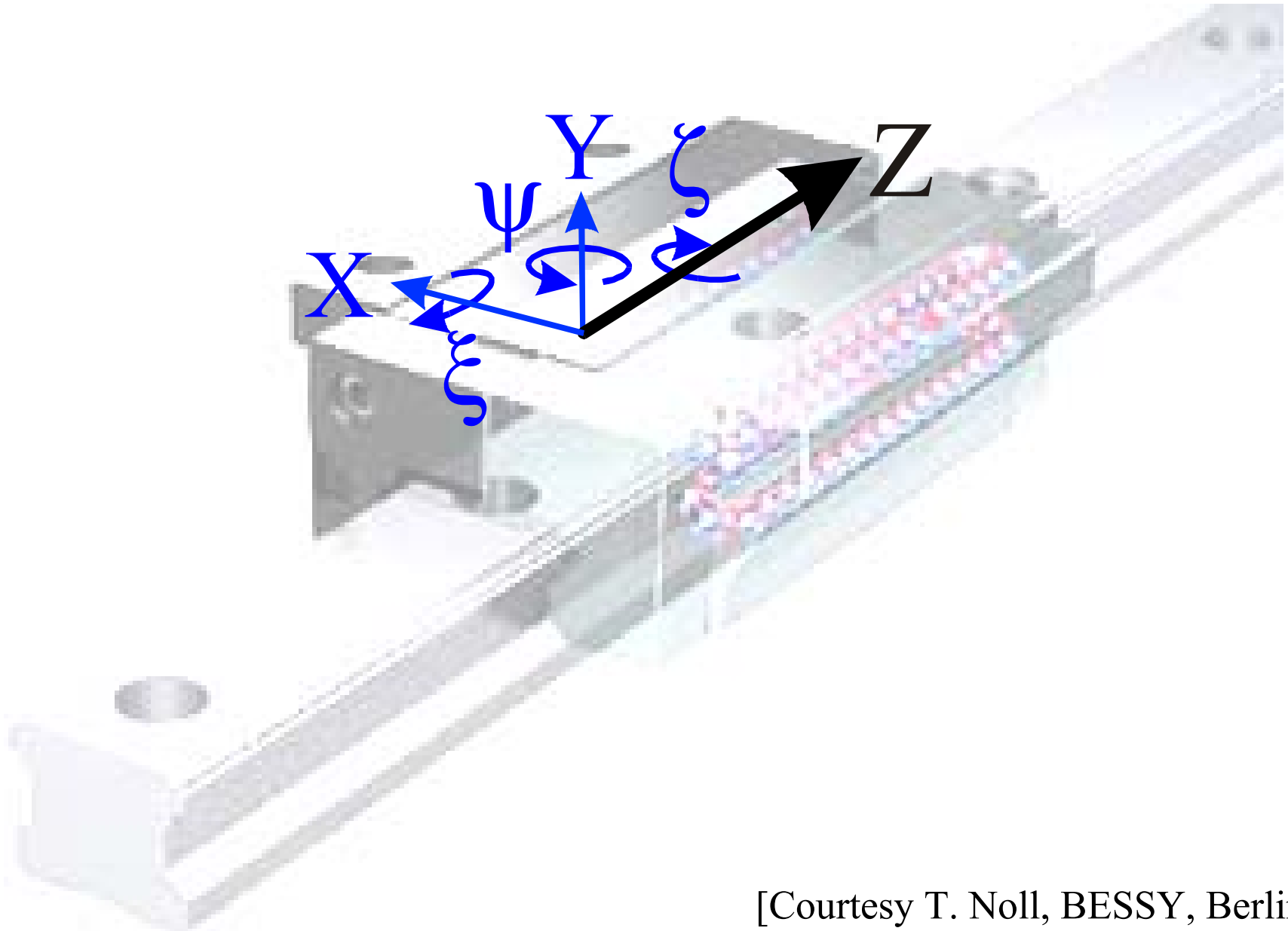

[Courtesy T. Noll, BESSY, Berlin]

Friction in Mechanical Systems

Positioning: steady-state errors, 'hunting' (limit cycles around reference position), wear, …

Tracking: stand-still errors, stick-slip (intermittent motion – e.g. chalk on black board, violin, earthquake)

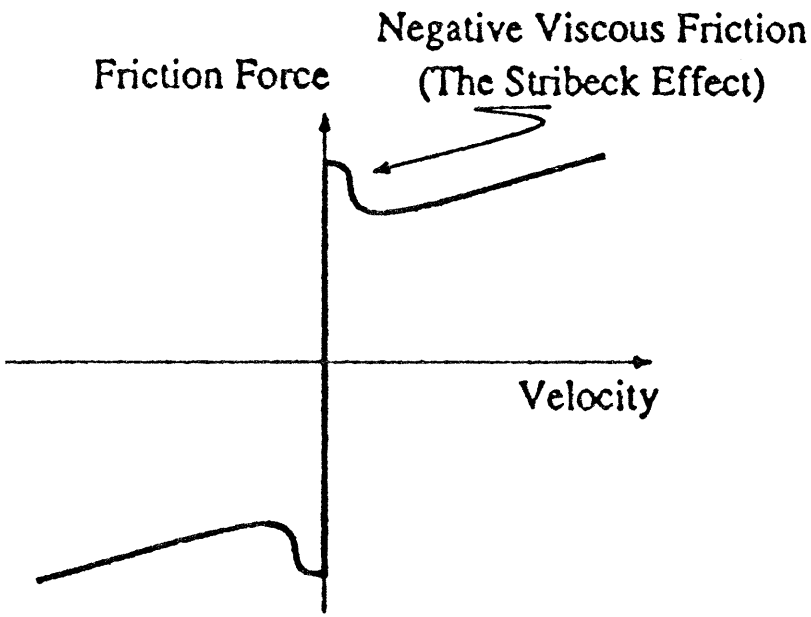

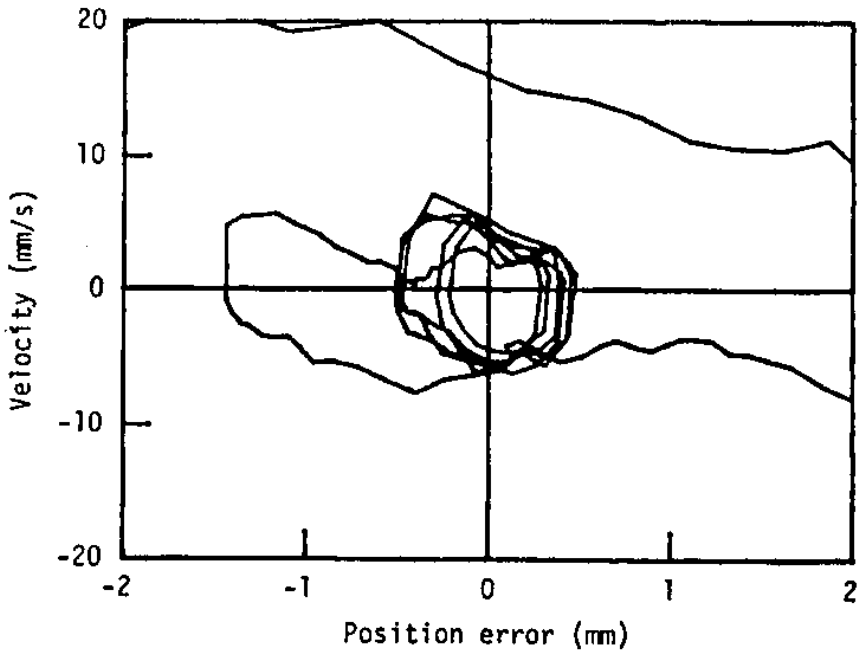

[Armstrong-Helouvry et al., Appl. Mech. Rev. ASME, 1994]
[Yang & Tomizuka, ASME J. Dyn. Sys. Meas. & Contr., 1988]

Compensating such and other non-linearities (e.g. micro-displacements for forces smaller than those needed to overcome stiction) is possible only by using complex control typologies (impulsive control, dual control, vibration (dither), adaptive control, …) and measurement techniques (i.e. feedback systems)

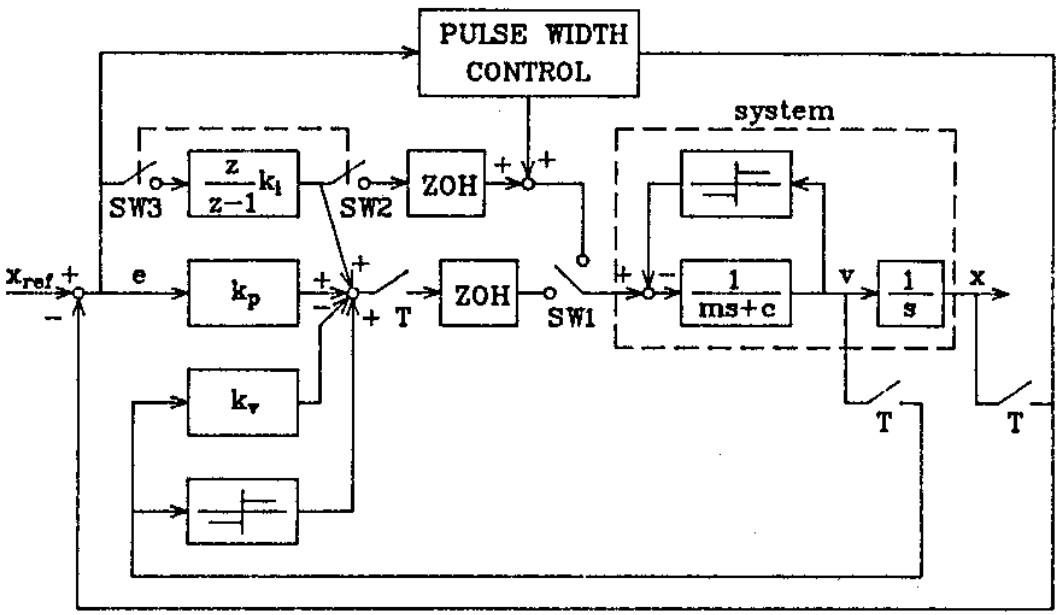

[Yang & Tomizuka, ASME J. Dyn. Sys. Meas. & Contr., 1988]

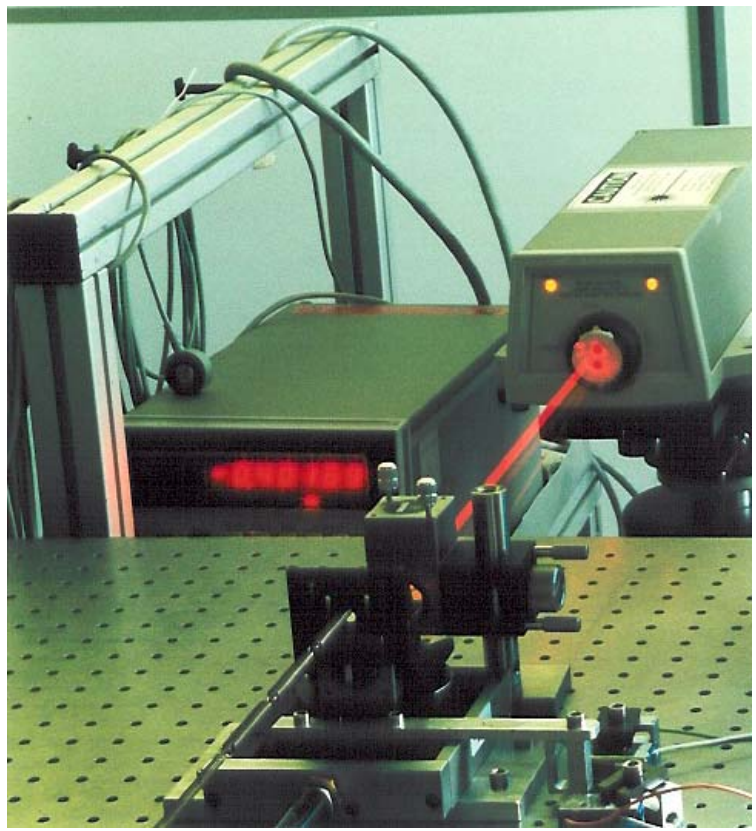

[cf. ZS, Poli Torino, 1996]

COMPLIANT MECHANISMS

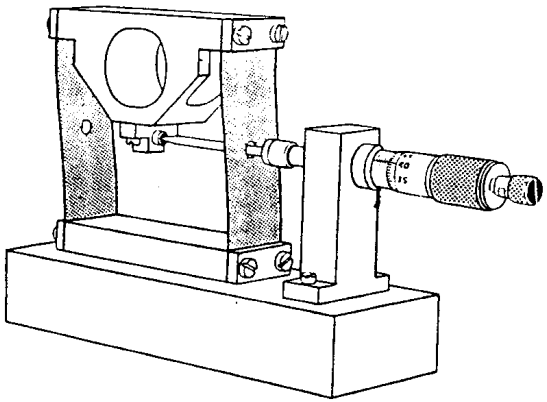

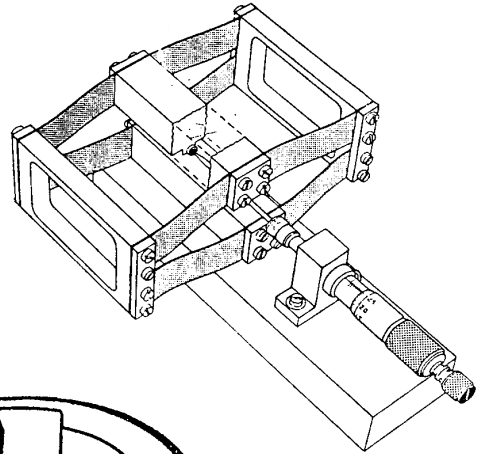

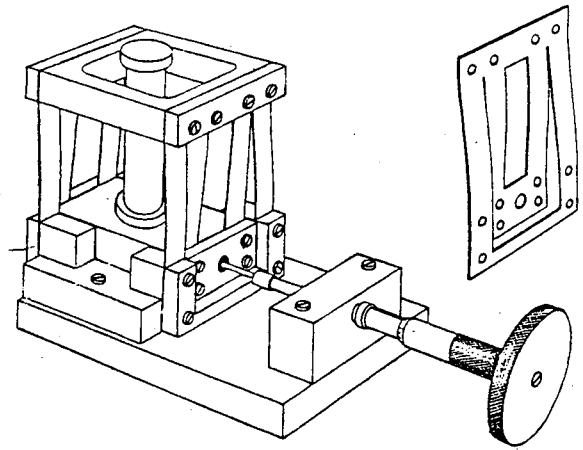

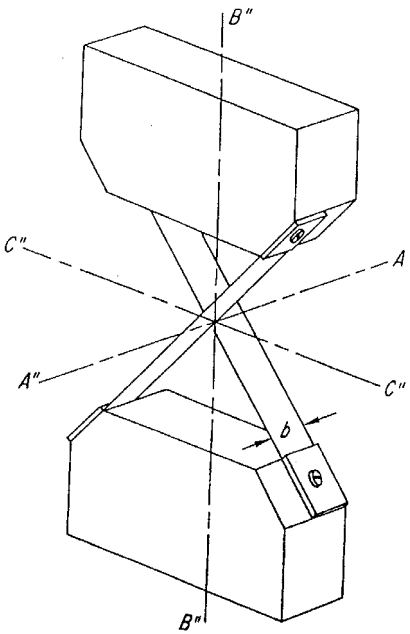

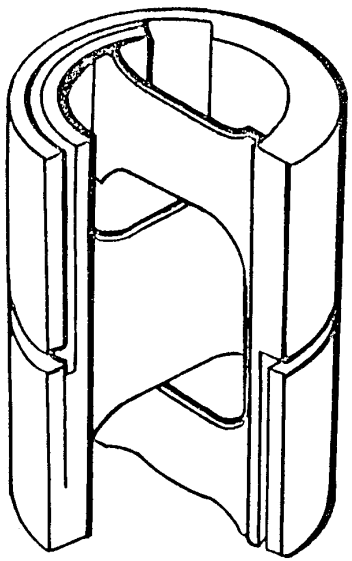

Commercial product
(free-flex)
[www.lucasutica.com]

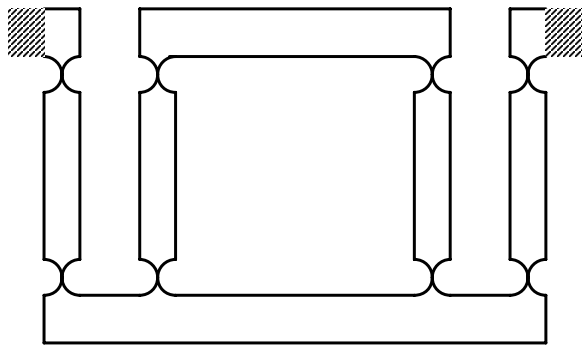

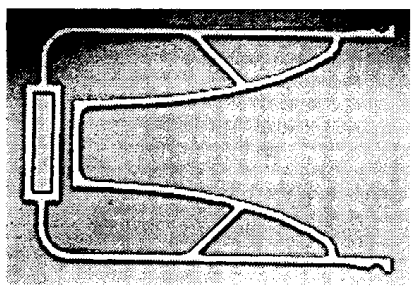

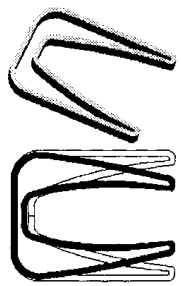

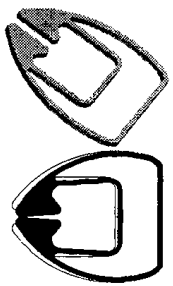

[Slocum, Prec. Machine Design, Prentice Hall, 1992] [Howell, Compliant Mech., Wiley, 2001]
[Smith et al., Found. of Ultraprecision Mech. Des., Gordon & Breach, 1992]
[Smith, Flexures, Gordon & Breach, 2000] [Kim, Korea Inst. Tech, 2000] [Henein, EPFL, 2000]

Advantages:

- high precision
- only slight hysteresis losses
- no friction (stiction)
- no wear & backlash
- no need for lubrication
- can be used at high & cryo temperatures, in aggressive (radiation), dirty and clean (UHV) conditions → **SR**
- monolithic manufacturing ("design for no assembly") → no tolerances
- errors are systematic ⇒ use of simple control laws
- simple and reliable design → simple maintenance
- limited costs (no feedthroughs)

Drawbacks:

- limited stroke
- limited load carrying capacity
- complex analytical formulation

MECHANISMS BASED ON SPRING-STRIPS

Precision positioning: it is necessary to characterize not only the main DOF, but also the non-linear "parasitic" displacements

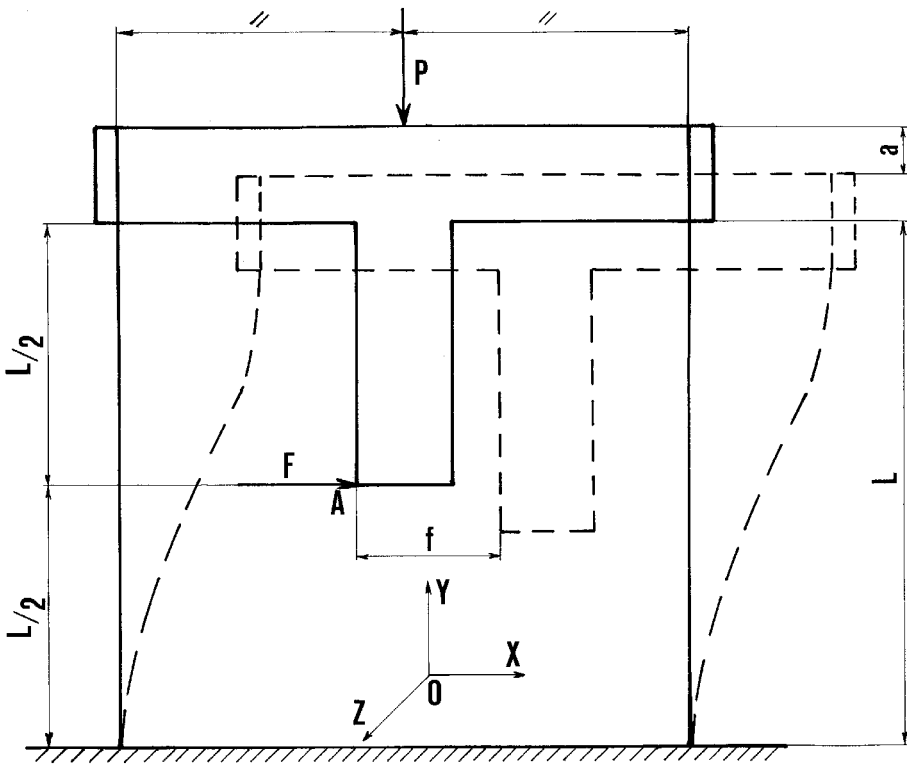

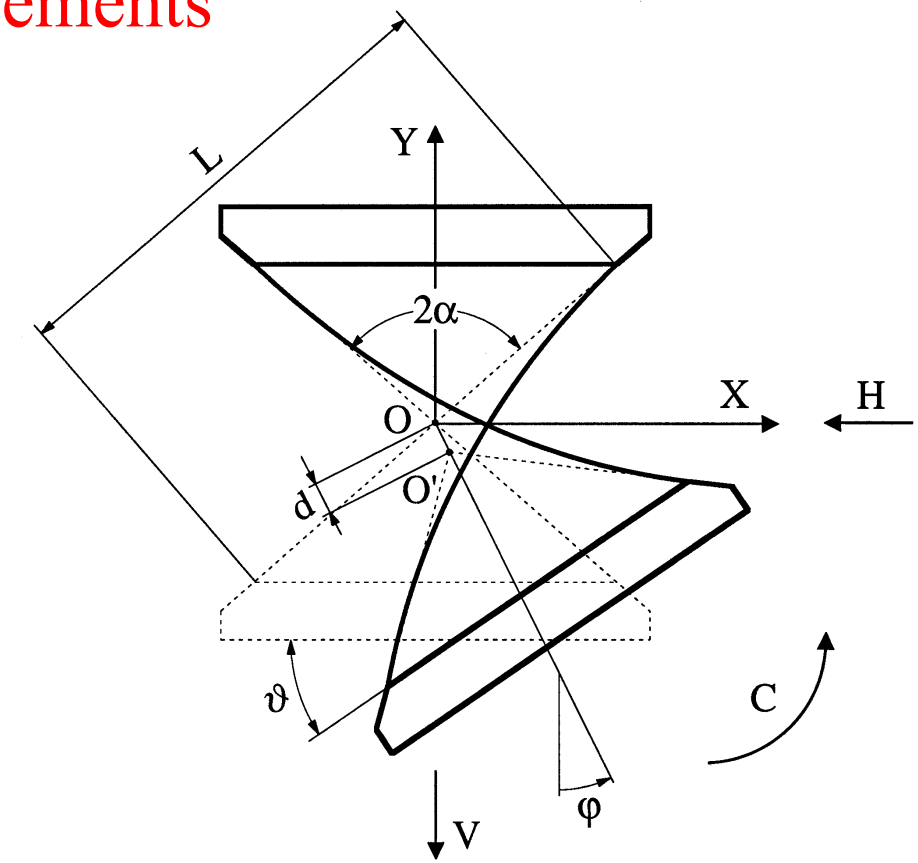

Collaboration (also in frame of EU projects): U. Udine (I), U. Brasov (R), Poli Torino (I), Elettra Trieste (I), PSI (CH), …

Theoretical analysis: reduces to general problem of cantilever beams loaded at the free end with forces and moments → can be addressed with analytical approaches of different degrees of approximation → limits of applicability depending on required degrees of accuracy and experimental validation

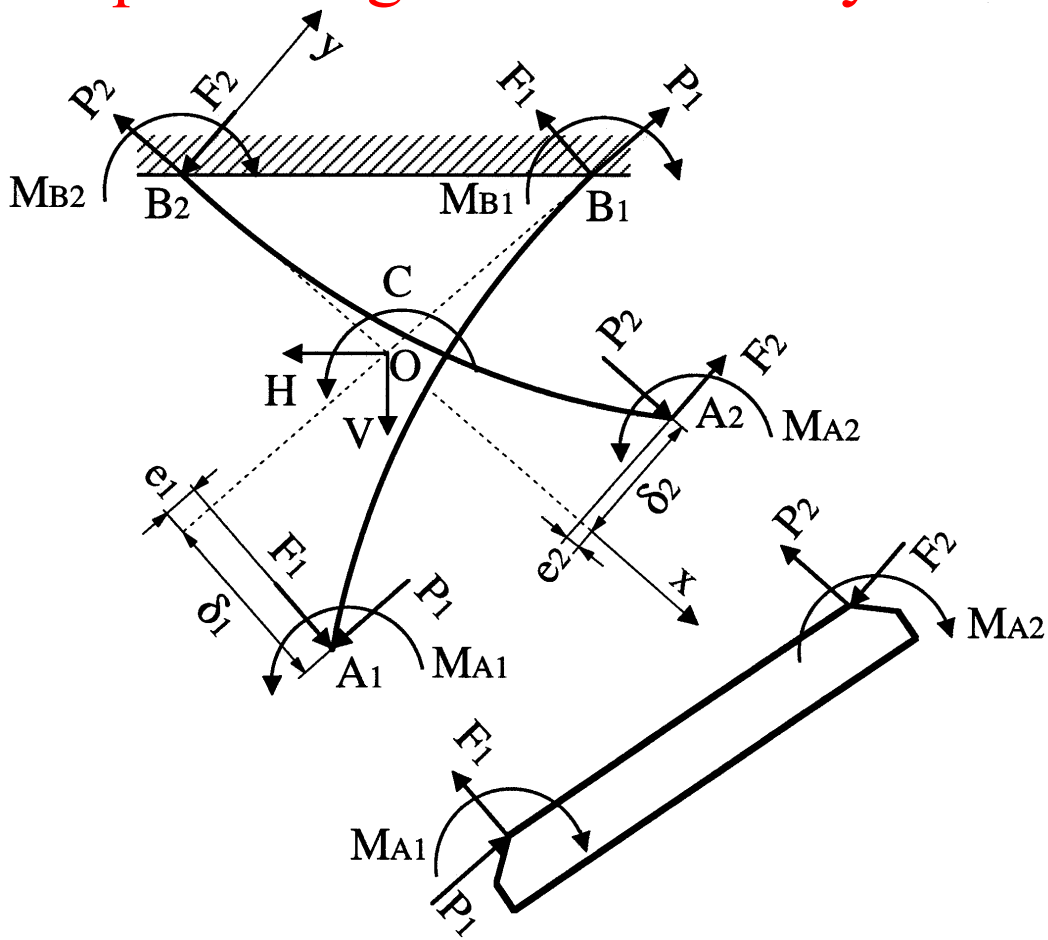

“Elastica” Method (EM)

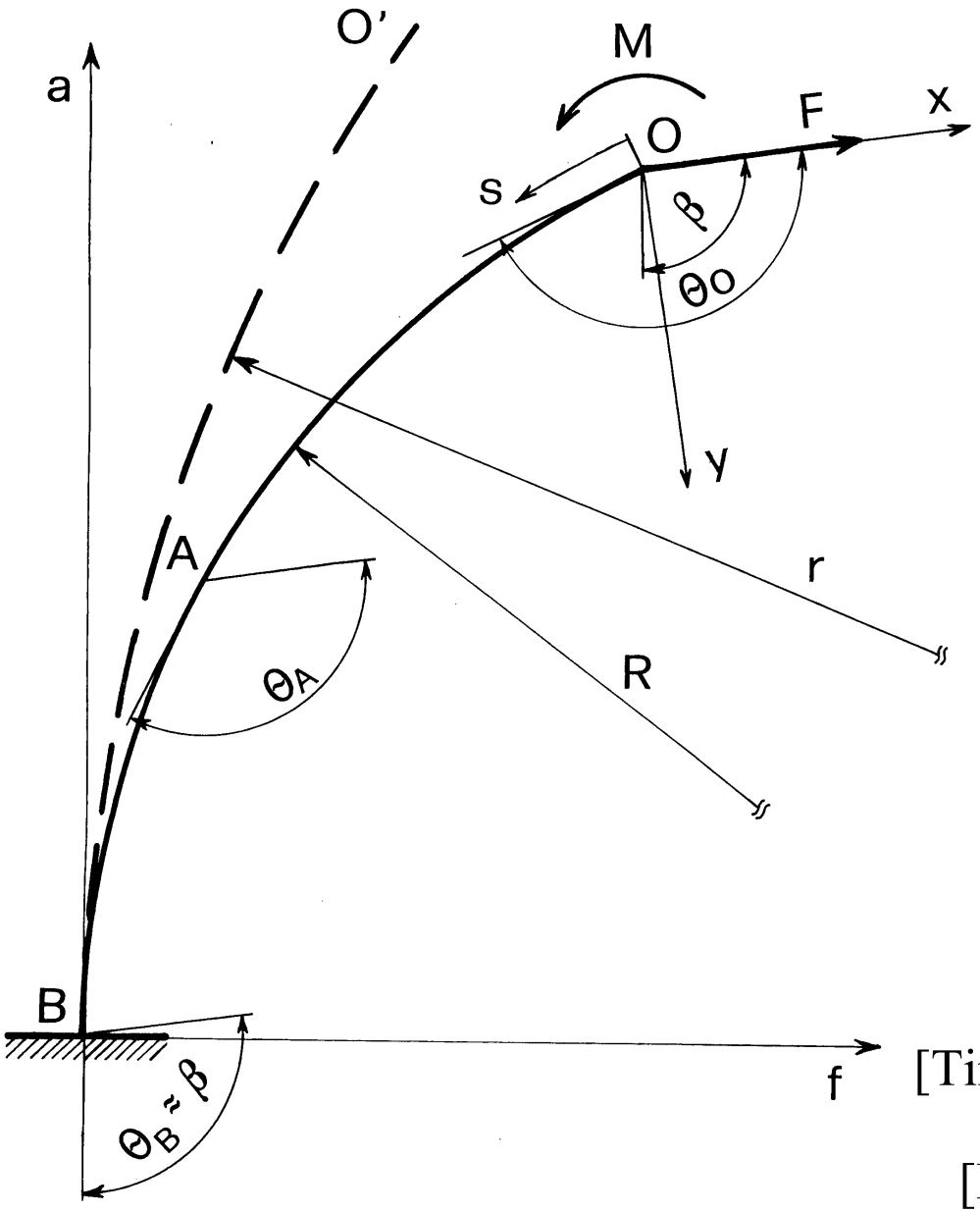

Exact expression for beam curvature in range of large (geometrically non-linear) deflections

$$EI\frac{d\theta}{ds} = EI\frac{\dfrac{d^2y}{dx^2}}{\left[1+\left(\dfrac{dy}{dx}\right)^2\right]^{3/2}} = P_{1(2)}y + M_{A1(2)} - F_{1(2)}x$$

The original “Elastica” formulation (straight cantilevers loaded axially) was recently extended to the general loading case

[Timoshenko & Gere, Th. El. Stab., 1961]
[Frisch-Fay, 1961]
[De Bona + ZS, J. ME Science, 1997]

$$C\,L = 2\,\overline{K}$$

$$\frac{a}{L} = 1 - \frac{2\,k\,\cos\varphi_0\,\sin\phi}{\overline{K}} - \left(\frac{2\,\overline{E}}{\overline{K}} - 1\right)\cos\phi$$

$$\frac{f}{L} = \frac{2\,k\,\cos\varphi_0\,\cos\phi}{\overline{K}} - \left(\frac{2\,\overline{E}}{\overline{K}} - 1\right)\sin\phi$$

$\overline{K}(k)$, $\overline{F}(k,\varphi_0)$ - complete and incomplete elliptic integral of the first kind:

$$\overline{K}(k) = \int_0^{\frac{\pi}{2}} \frac{d\varphi}{\sqrt{1 - k^2\,\sin^2\varphi}}$$

$$\overline{F}(k,\varphi_0) = \int_0^{\varphi_0} \frac{d\varphi}{\sqrt{1 - k^2\,\sin^2\varphi}}$$

$\overline{E}(k)$, $\overline{E}(k,\varphi_0)$ - complete and incomplete elliptic integral of the second kind:

$$\overline{E}(k) = \int_0^{\frac{\pi}{2}} \sqrt{1 - k^2\,\sin^2\varphi}\;d\varphi$$

$$\overline{E}(k,\varphi_0) = \int_0^{\varphi_0} \sqrt{1 - k^2\,\sin^2\varphi}\;d\varphi$$

$$\overline{K} = \overline{K}(k) - \overline{F}(k,\varphi_0) \qquad \overline{E} = \overline{E}(k) - \overline{E}(k,\varphi_0)$$

$$k = \sin\theta_0/2 \qquad \sin\varphi_0 = \frac{\sin\phi/2}{k}$$

$$C = \sqrt{\frac{R}{E\,J}} = \sqrt{\frac{P}{P_{cr}}}\;\frac{\pi}{L\,\sqrt{|\cos\phi|}}$$

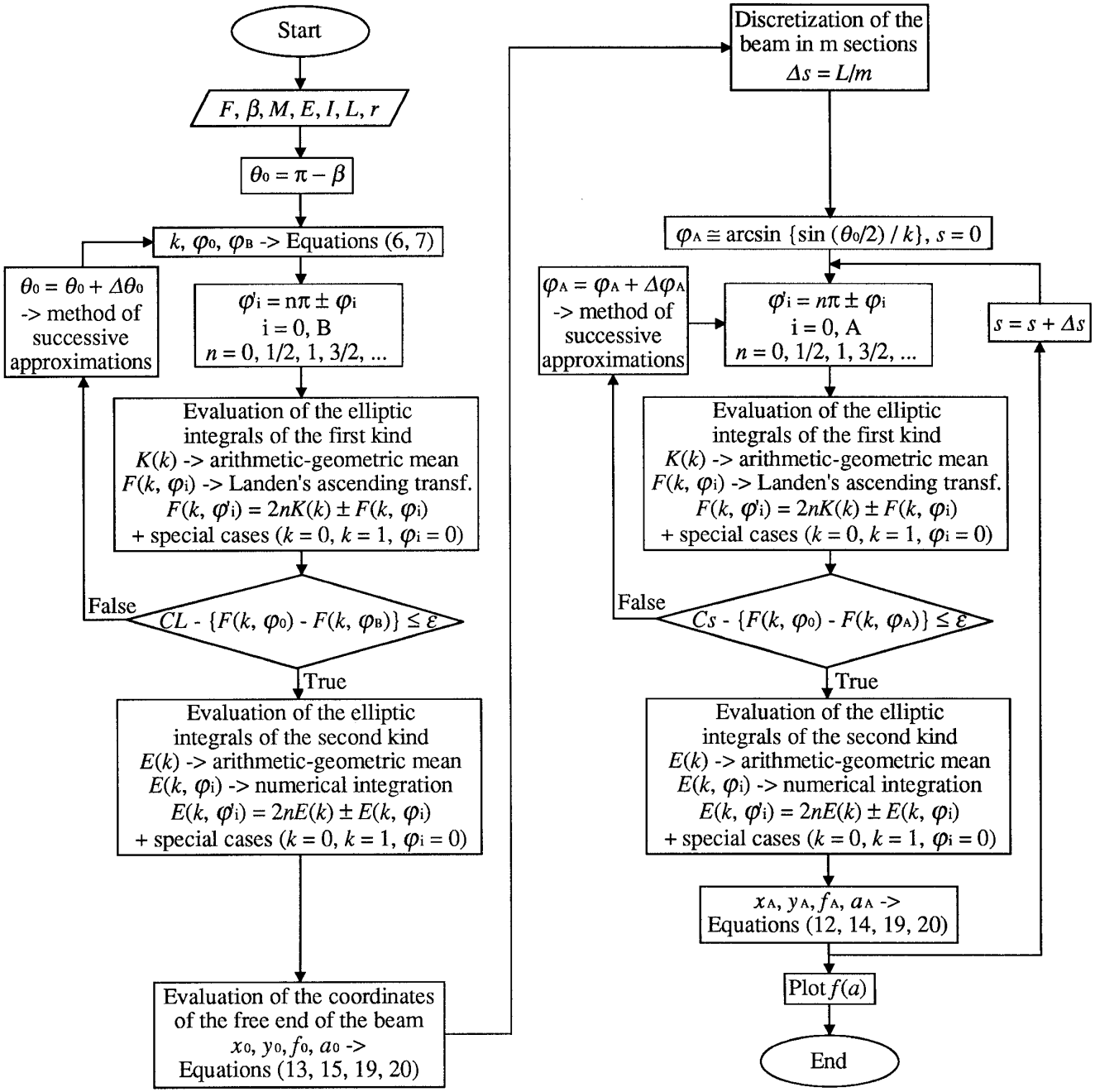

[De Bona + ZS, J. ME Science – Proc. Inst. ME, 1997]

Approximated Curvature Method (APM)

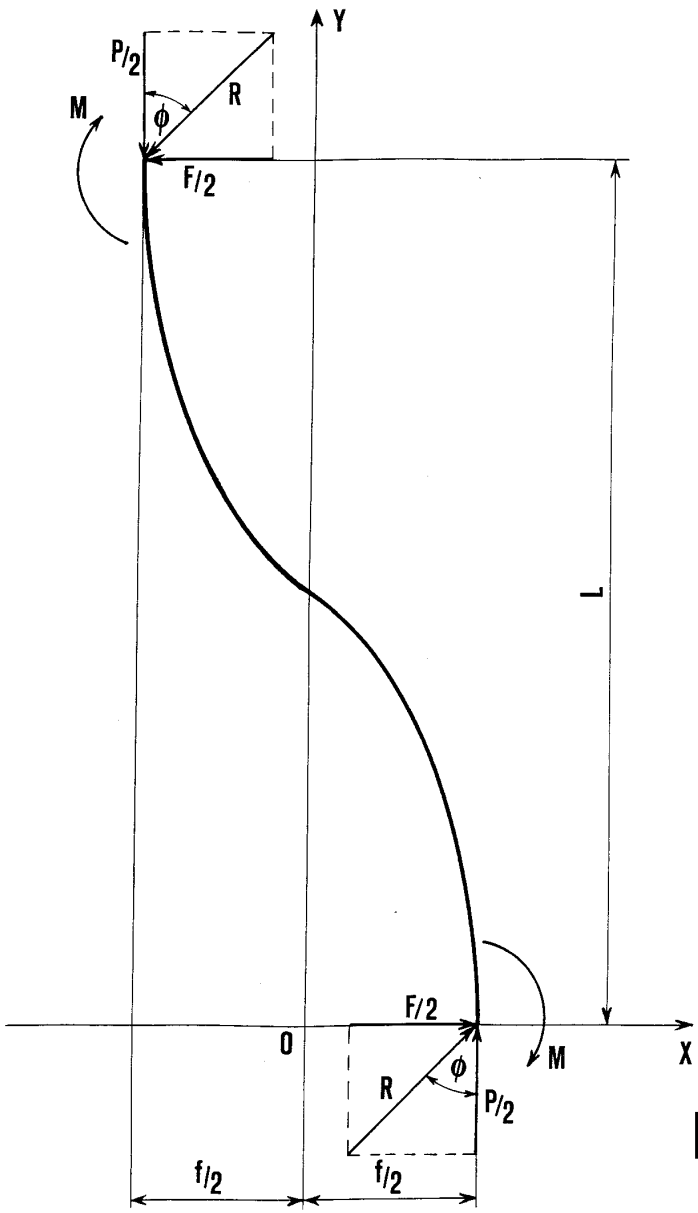

Influence of axial load on flexural behavior is taken into account, but square of derivative in curvature formula is neglected

$$EI\frac{\frac{d^2y}{dx^2}}{\left[1+\left(\frac{dy}{dx}\right)^2\right]^{3/2}} \approx EI\frac{d^2y}{dx^2} = P_{1(2)}y + M_{A1(2)} - F_{1(2)}x$$

$$\left(\frac{dy}{dx}\right)^2 \approx 0$$

[Timoshenko & Gere, Theory Elast. Stability, 1961]
[Plainevaux, Nuovo cimento, 1954]

Geometric Model (GM)

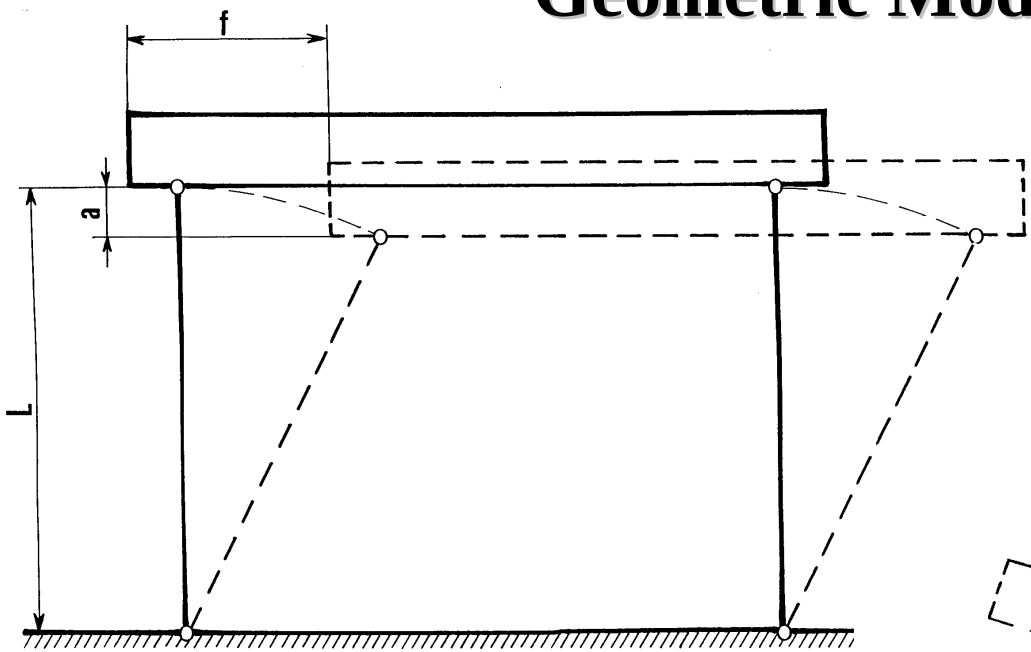

Approximation with a rigid pinned quadrilateral

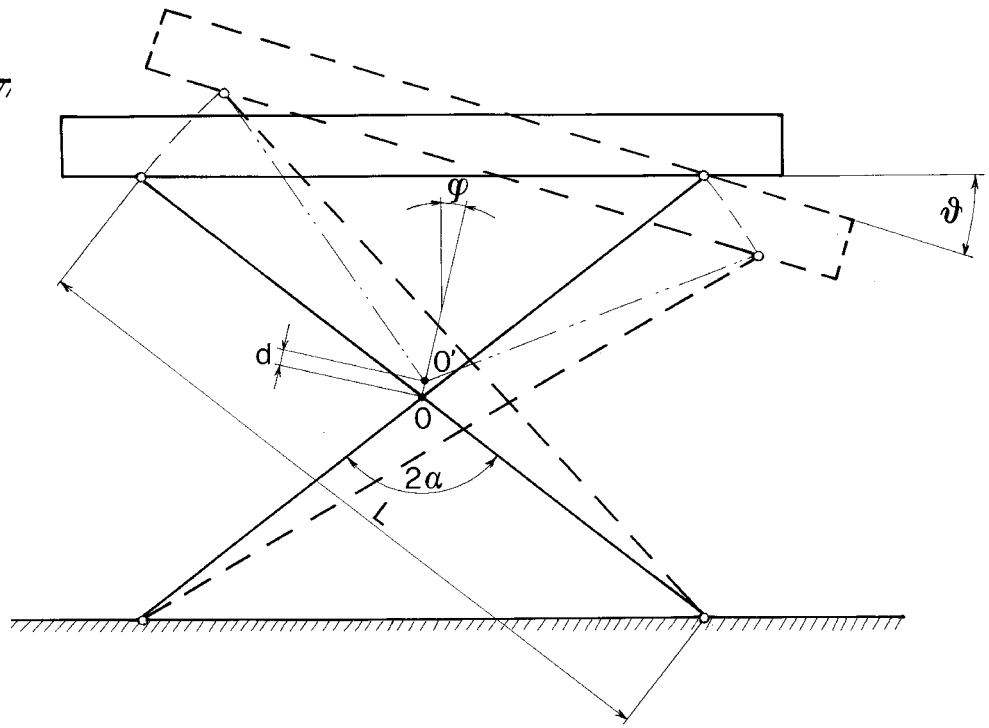

Bending of beam and influence of axial loads are not taken into account

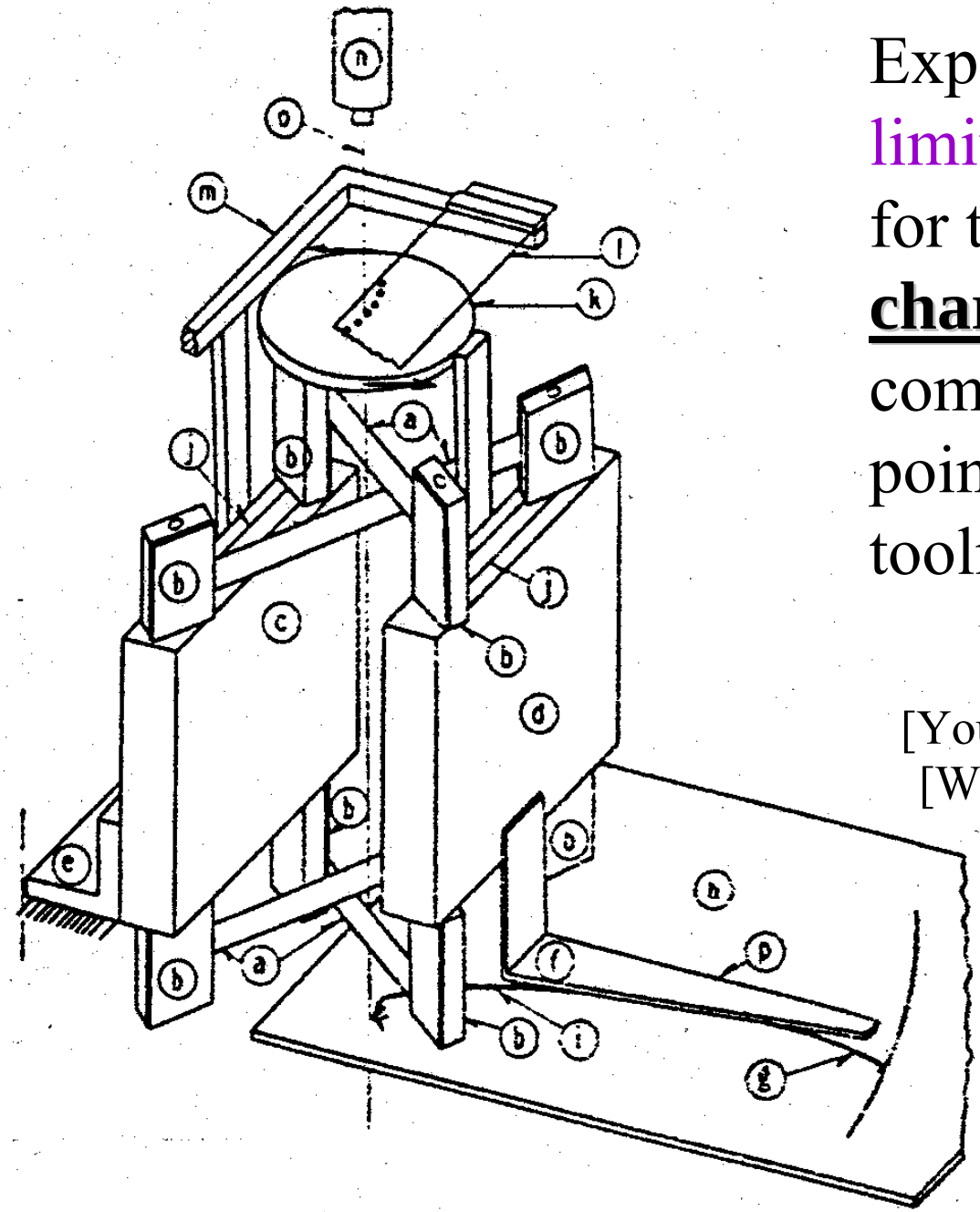

Experimental techniques of limited accuracy were used for the **experimental characterization** of compliant mechanisms: pointers, styluses, toolmakers' microscopes, …

[Young, J. Appl. Mech., ASME, 1944]
[Wittrick, Austral. J. Sci. Res., 1948]
[Nickols et al., Eng., 1951]
[Wuest, Feinwerktech., 1950]
[Siddall, U. Aberdeen, 1970]

Michelson-type Laser Doppler Interferometry

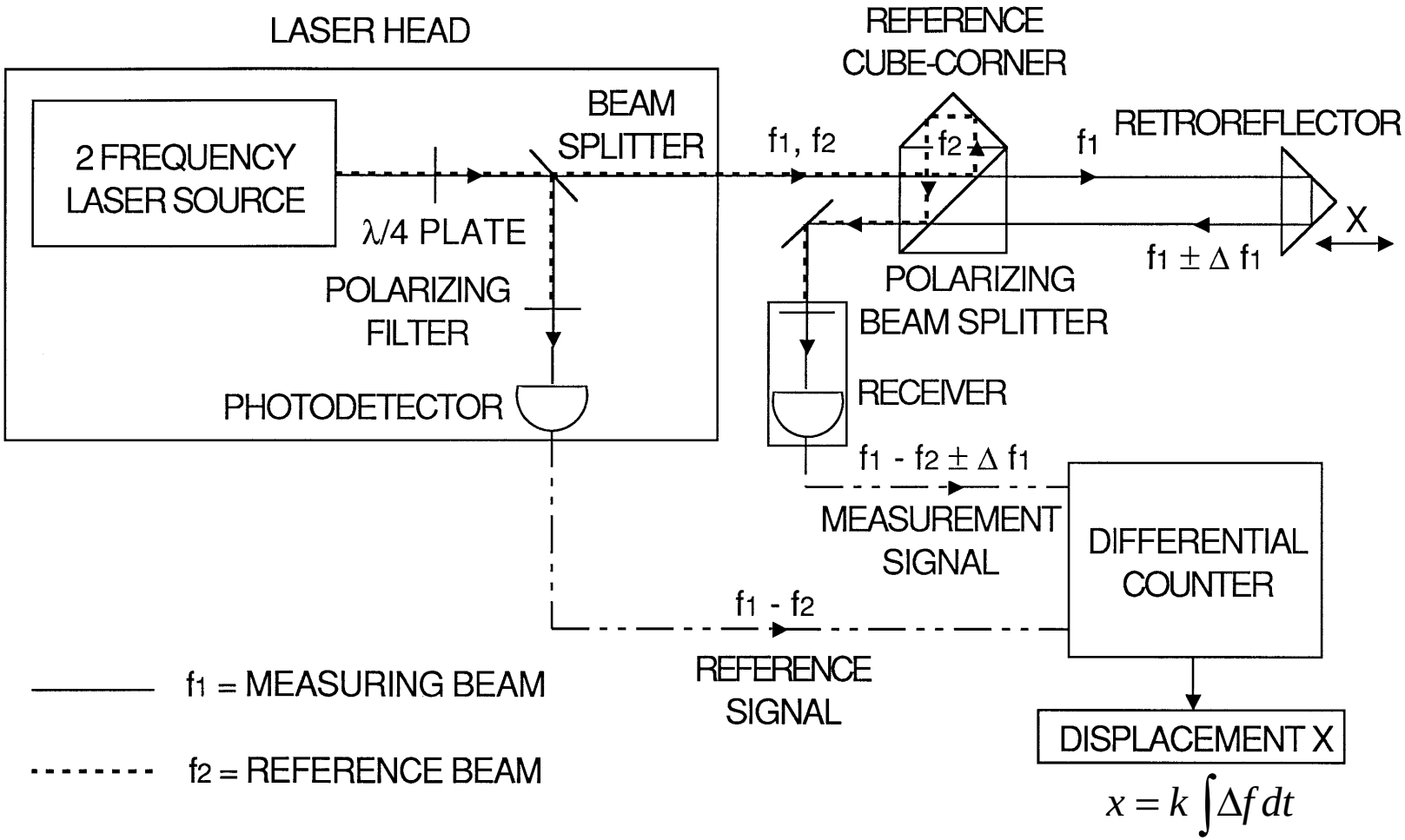

$$x = k \int \Delta f \, dt$$

max. resolution = 1 (0.25) nm; max. velocity: 1 m/s; BW: 1 kHz

$f_1, f_2 \approx 4.8 \cdot 10^{14}$ Hz (He:Ne laser) $\quad f_2 - f_1 = 2$ MHz $\quad v_r = 1$ m/s

$\Rightarrow \Delta f/(f_2 - f_1) = 1.6$

[cf. ZS, Poli Torino, 1996]

Measurement tech.	Resolution	Range	Range/res.
Capacitive sensors	0.1 - 0.5 nm	5 - 15 µm	$3 - 5 \times 10^4$
Fibre optic	0.5 nm	30 µm	6×10^4
STM	0.01 nm	20 µm	2×10^6
Scannig X-ray interferometry	0.03 nm	200 µm	6.67×10^7
Laser interferometry	0.25 nm	80 m	3.2×10^{11}
Linear optical scale	10 nm	1 m	1×10^8

[cf. McKeown, Annals CIRP, 1987]

Laser interferometry: resolutions and accuracies are practically independent on the measurement range, intervals of uncertainty are limited (usage in metrology, aeronautics, robotics, calibration of machine tools, …) → such an optical (non-contact) approach to displacement measurements was used for the experimental validation of the analytical results

Translation Mechanisms Based on Spring-strips

Goal: determination of the limits of applicability of the analytical approaches for the calculation of the parasitic displacement $a = f(f)$

Parallel spring translator

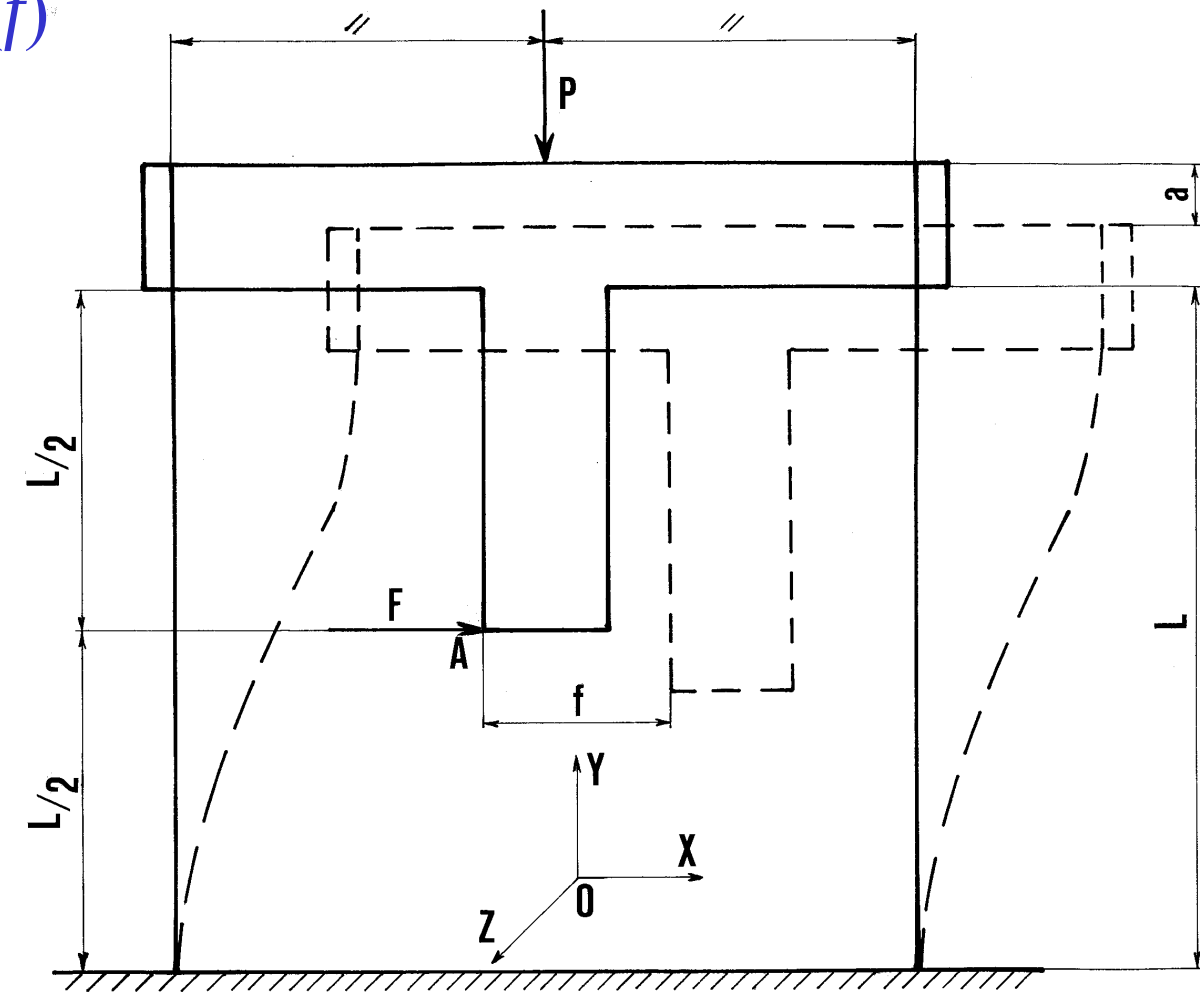

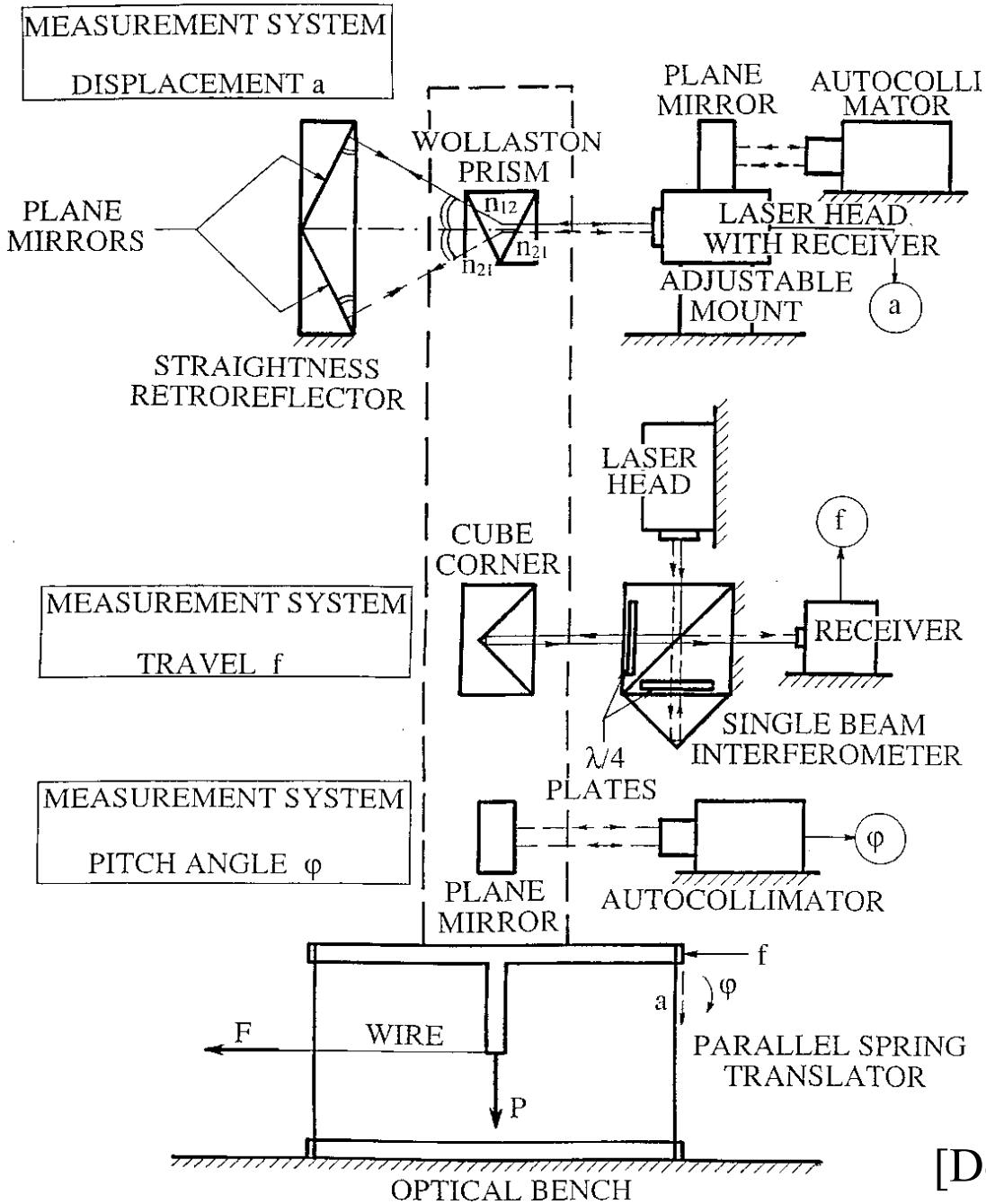

Simultaneous measurement of linear horizontal displacements *f*, parasitic vertical displacements *a* and, to assess mounting accuracy, rotations *φ*

Resolution of linear displacement meas.: 10 nm

Resolution of angular meas.: 500 nrad (~0.1”)

[De Bona + ZS, IP Prec. Eng., 1993]

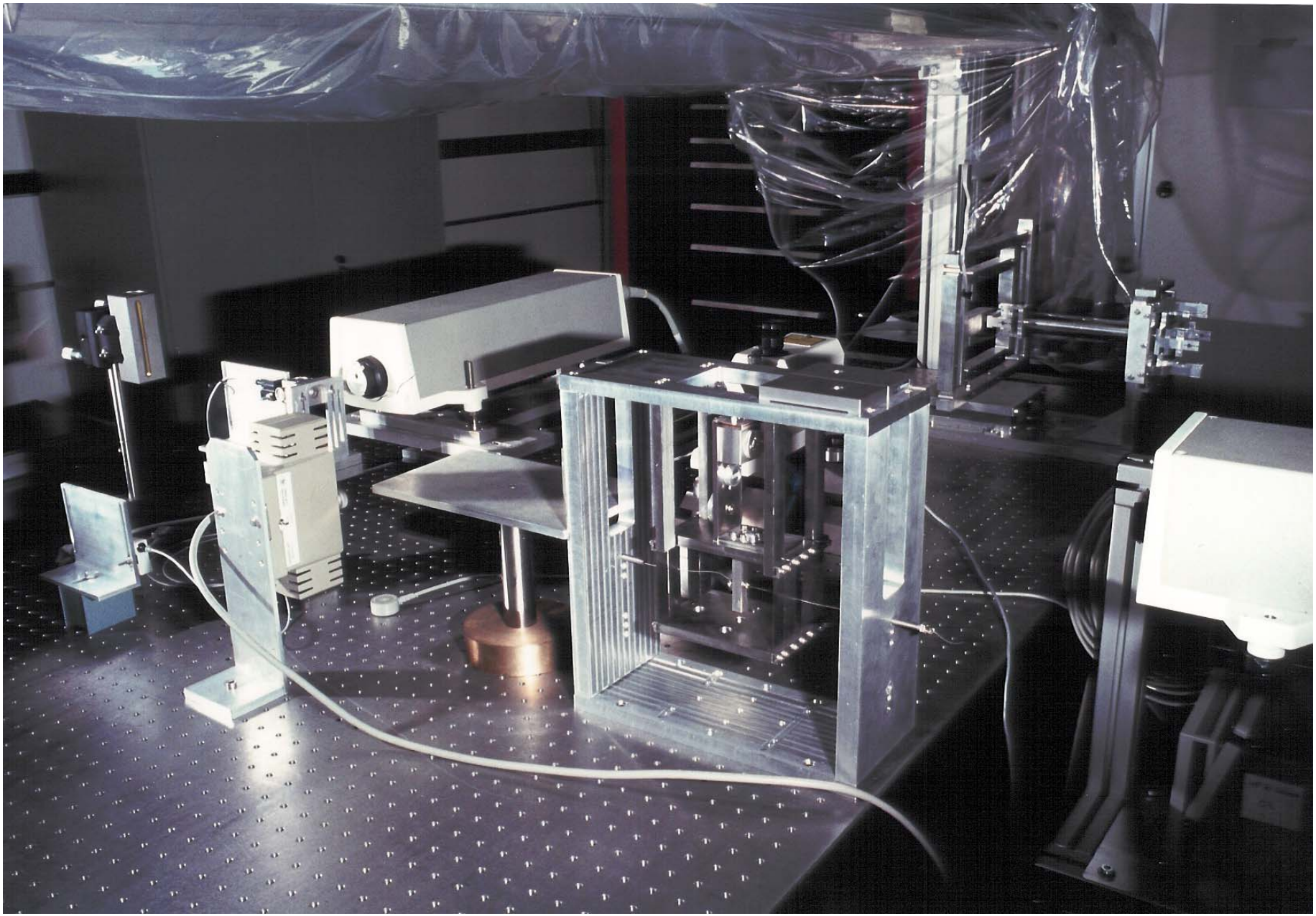

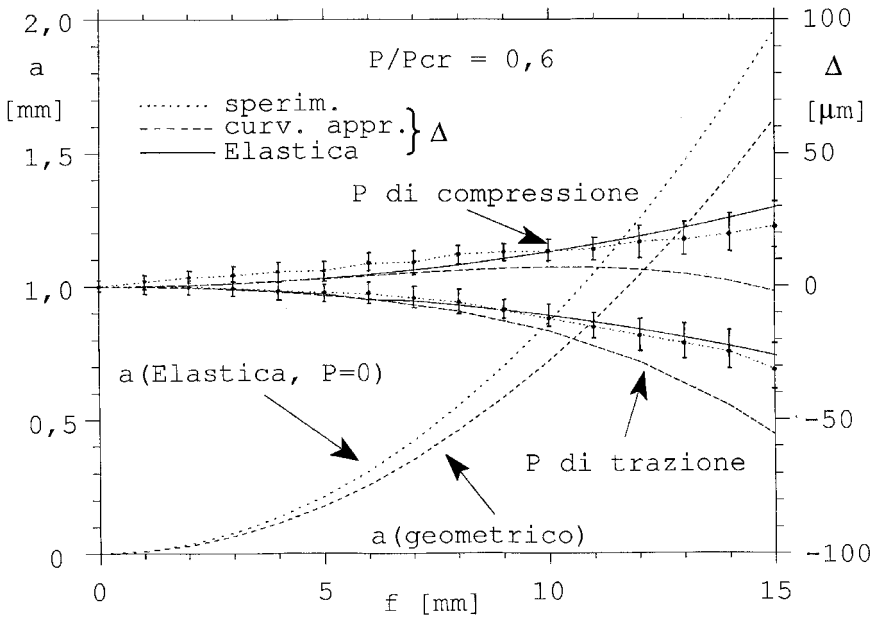

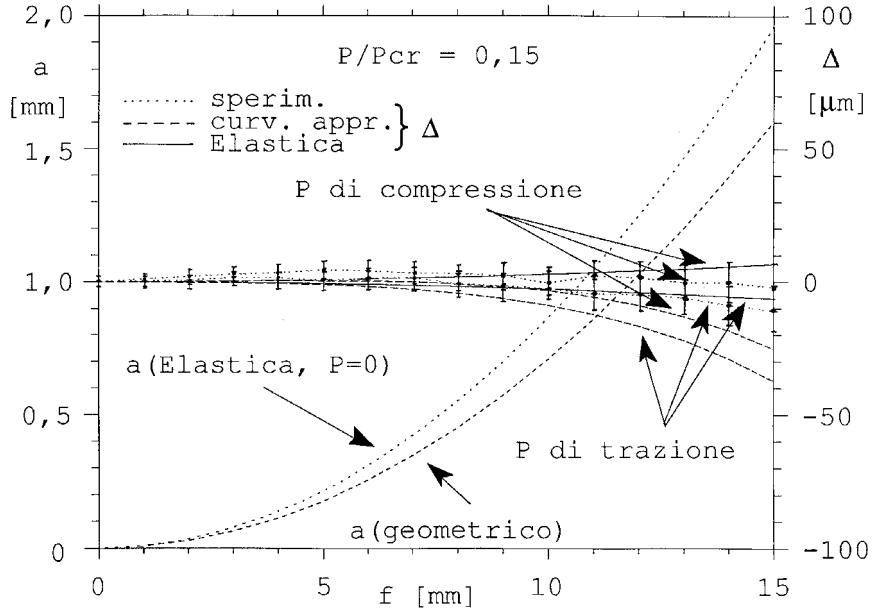

Spring-strips: L = 70 mm, t = 0.3 mm, b = 40.3 mm

GM: errors of ~ 20%

ACM: neglecting the square of the derivative causes errors that grow with increasing axial loads and primary displacements

EM: results are always within meas. intervals of uncertainty

Measurement accuracies of $\pm 10^{-4}$ have to be achieved to emphasize the non-linear effects in the curvature formula

Axial loads of different sign cause parasitic displacements of different entity

[De Bona + ZS, IP Prec. Eng., 1993]

Compensated Translation Mechanisms

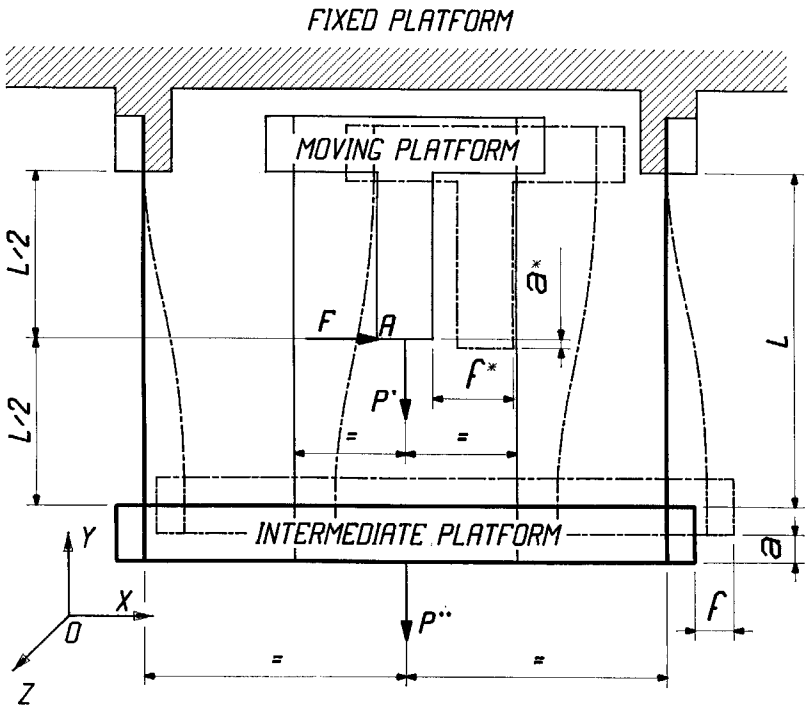

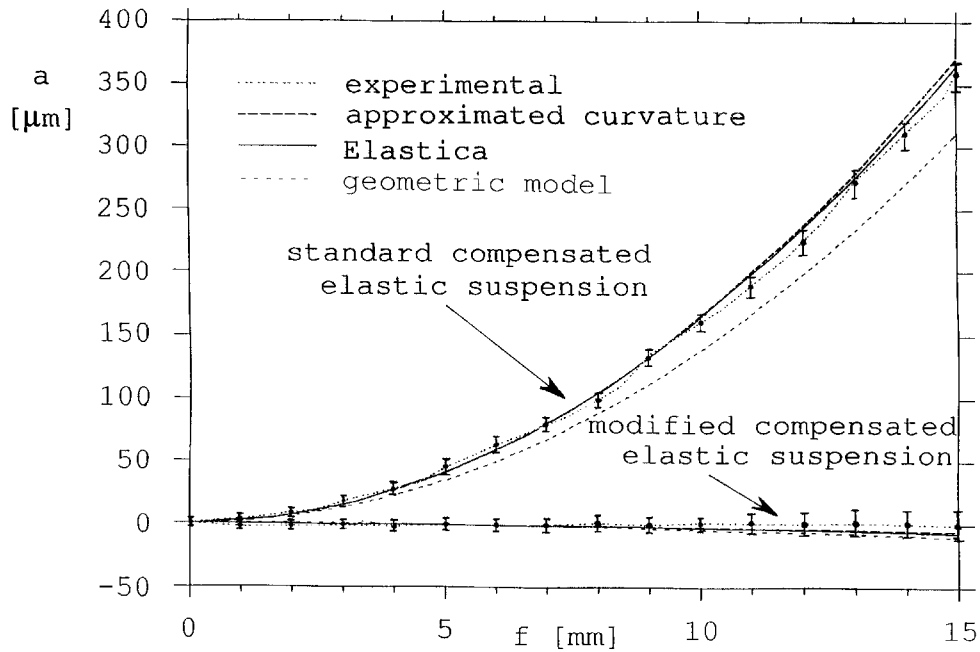

Spring-strips: L = 70 mm, t = 0.3 mm, b = 38 mm, $P_c/2$ = 4.9 N, $P_t/2$ = 9.1 N
(L_t = 70.6 mm, t_t=0.25 mm, $P_t/2$ = 9.9 N)

Standard compensated mechanism: double the stroke, but there is still a parasitic displacement because of different axial loads

By 'tuning' the design parameters, it is possible to minimize the parasitic displacement and thus to achieve ultra-high precision straight displacements

[De Bona + ZS, IP Prec. Eng., 1993]

Rotation Mechanisms Based on Spring-strips

Goal: analysis of the variation of the amplitude d and of the phase φ of the parasitic displacement $\overline{OO'}$ as function of rotation ϑ for various values of the loads V and H

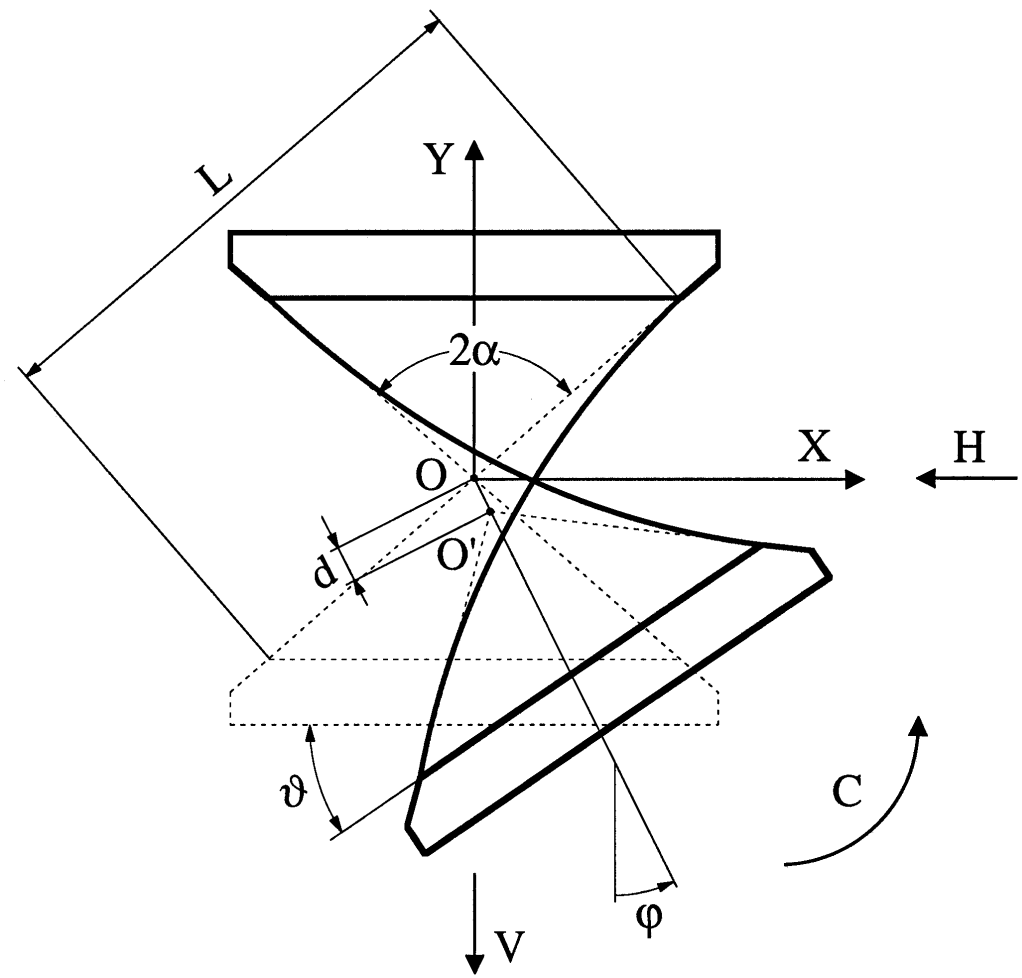

Cross-spring pivot

Spring-strips: L = 115 mm, t = 0.5 mm, b = 15 mm, $\alpha = \pi/4$

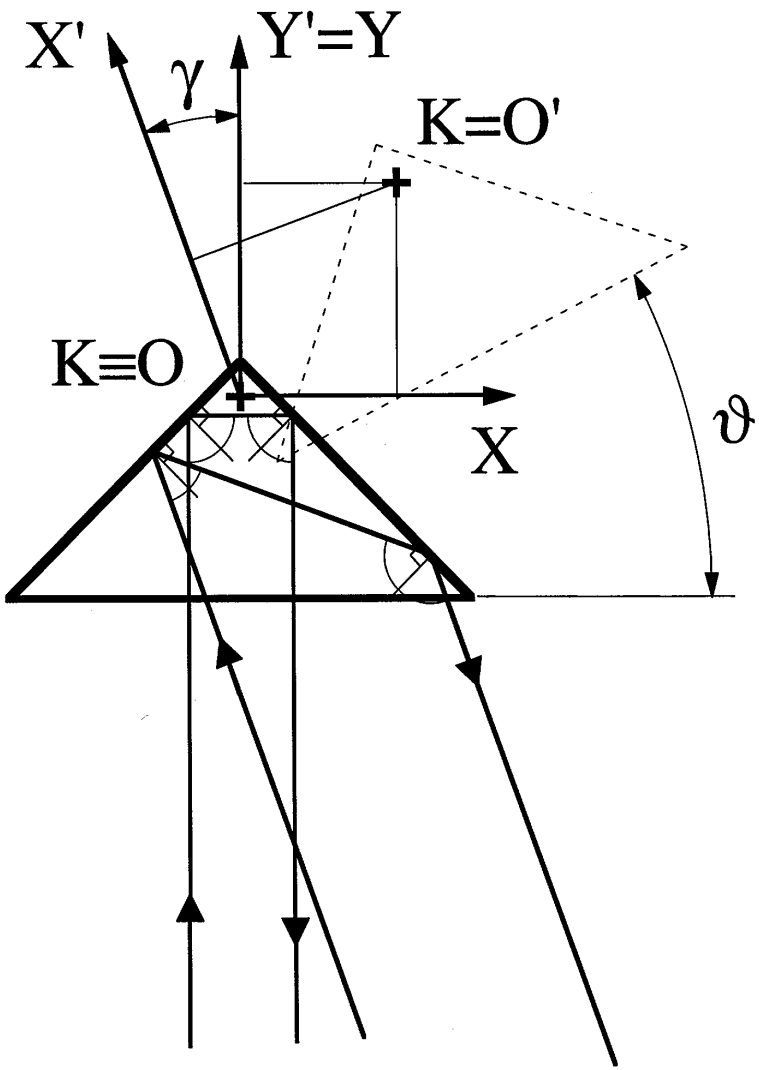

Tracking of a point (geometric center of mechanism) in 2D space ⇒ 2 beams under a precisely calibrated angle γ

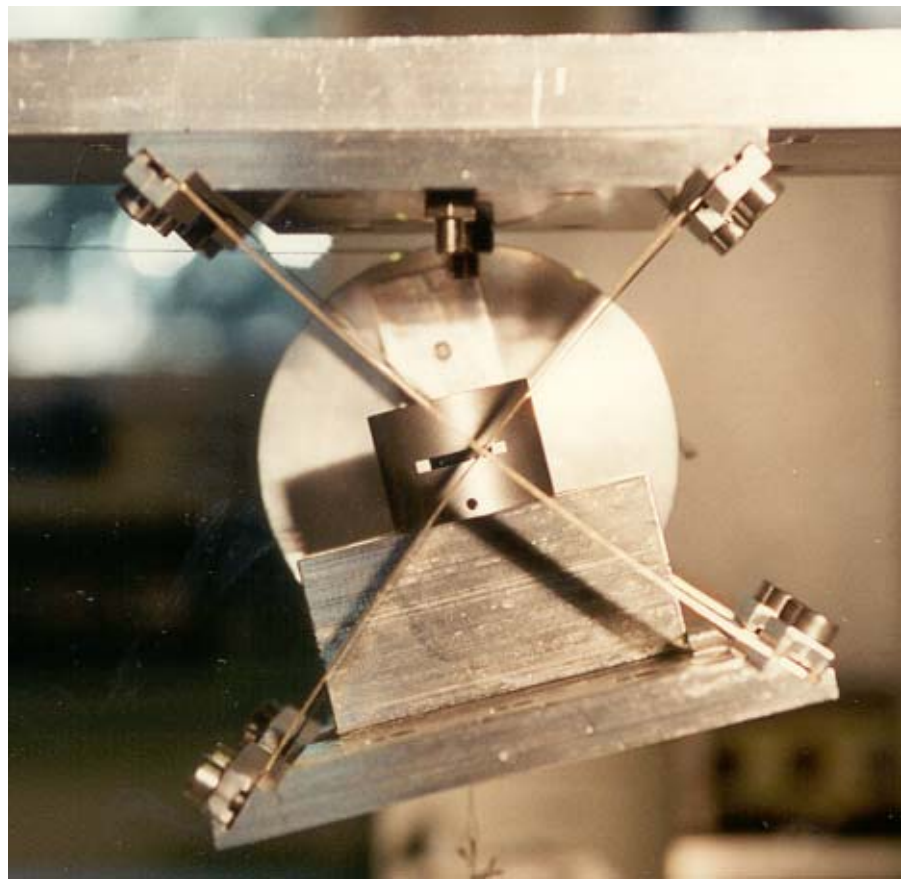

"Cube-corner" reflects the beam ∥ to the incoming beam

Simultaneous meas. of 2 components of parasitic displ. and of angle ϑ; resolution of linear displacement meas.: 10 nm; resol. of angular meas.: 200 nrad (~ 0.04”)

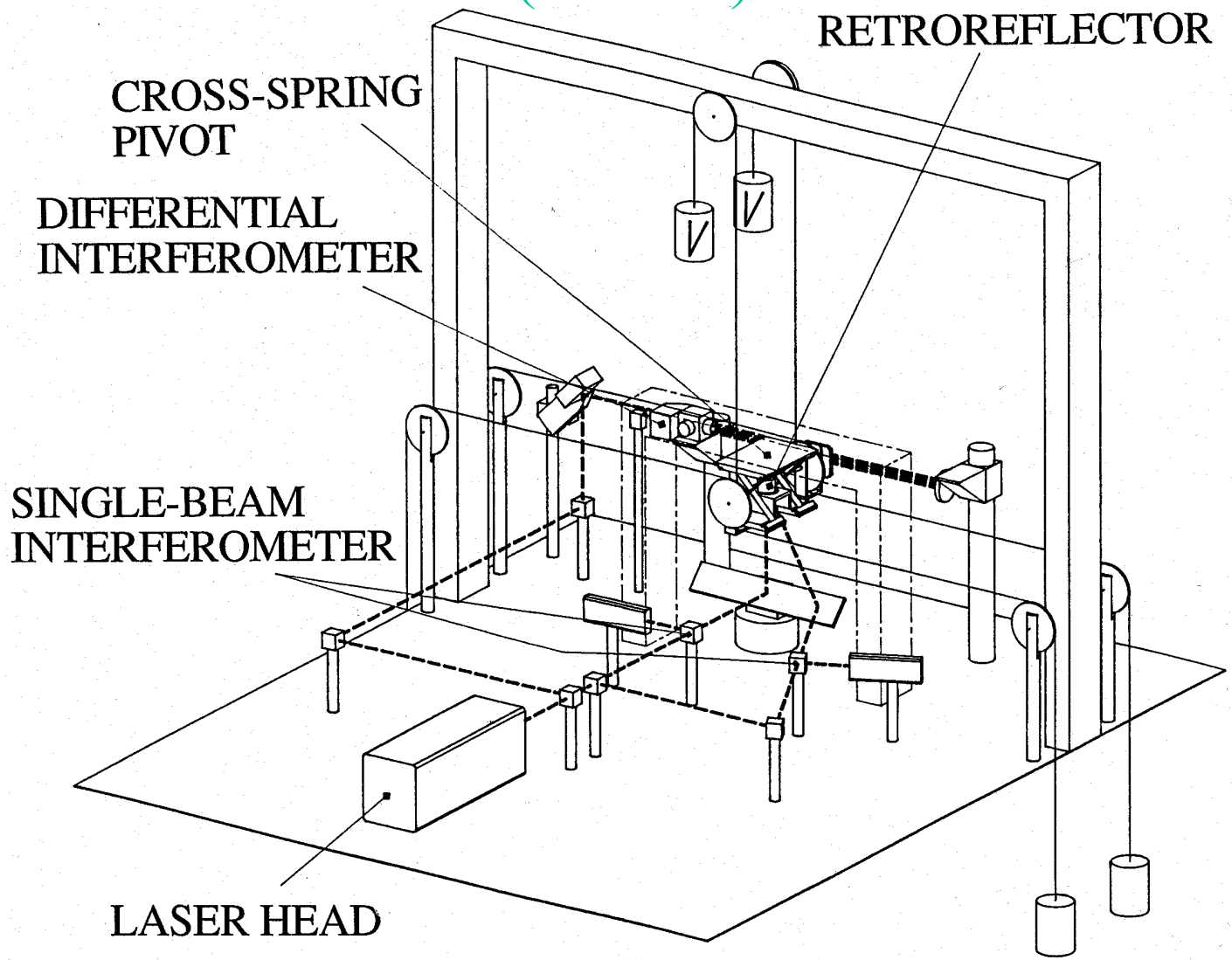

[ZS + De Bona, Prec. Eng., 2002]

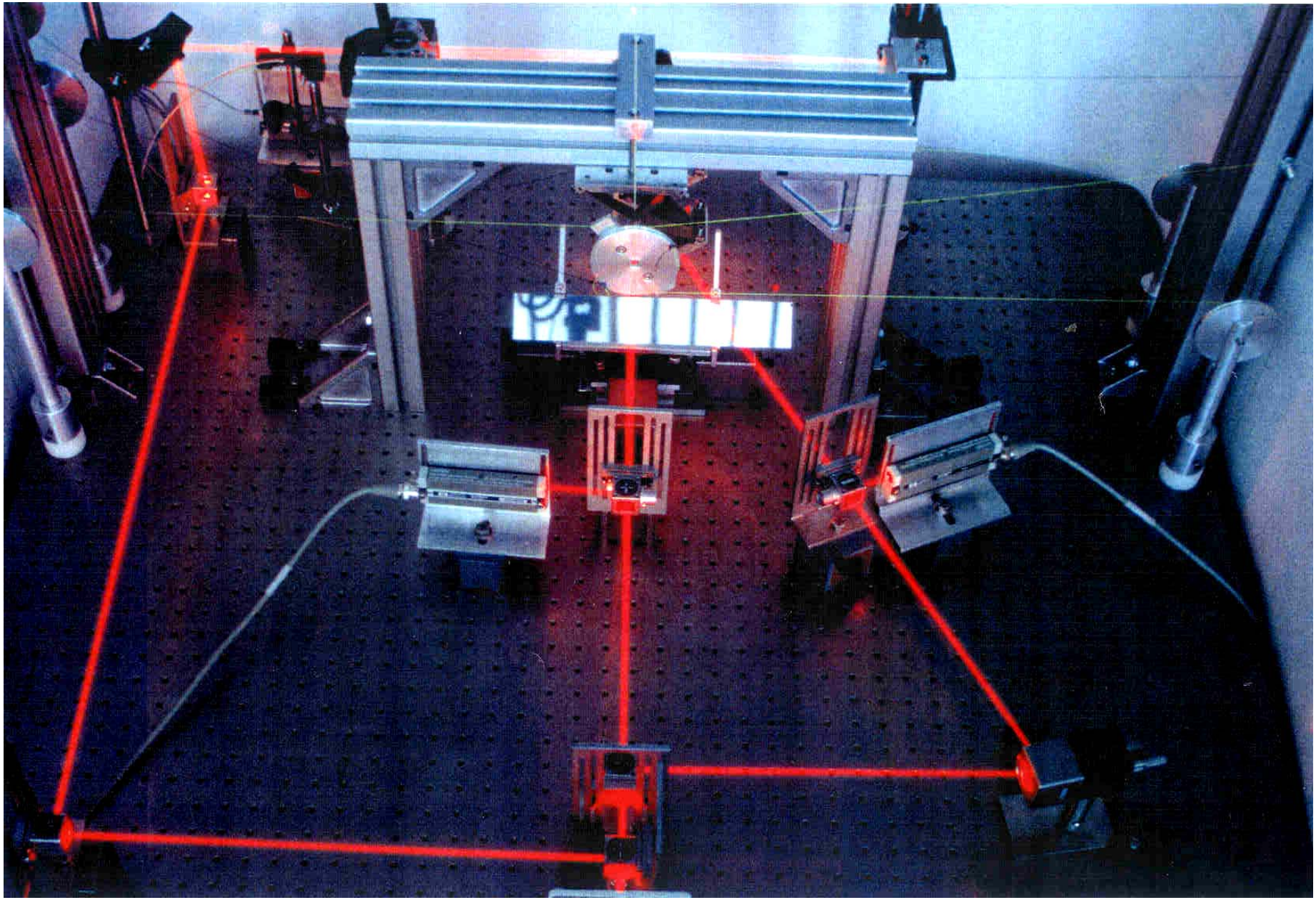

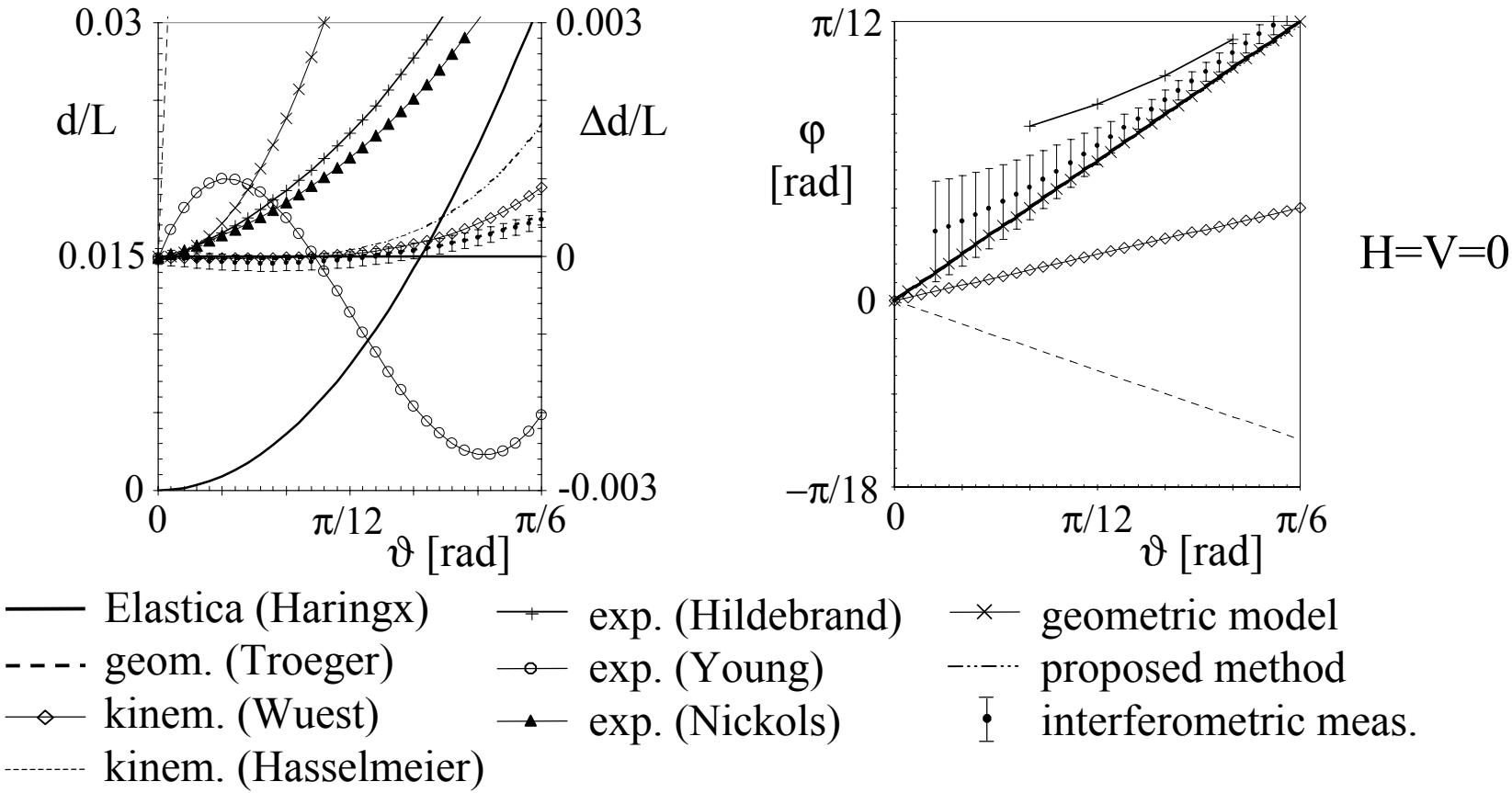

[ZS + De Bona, Prec. Eng., 2002]

Only the interferometric method allows the limits of applicability of the analytical approaches to be established (errors to EM < 2%)

Geometric & kinematic methods don't provide appropriate results

EM is easily applicable only in the case of loading with pure moments (symmetric configuration)

ACM generalized for this case gives satisfactory results

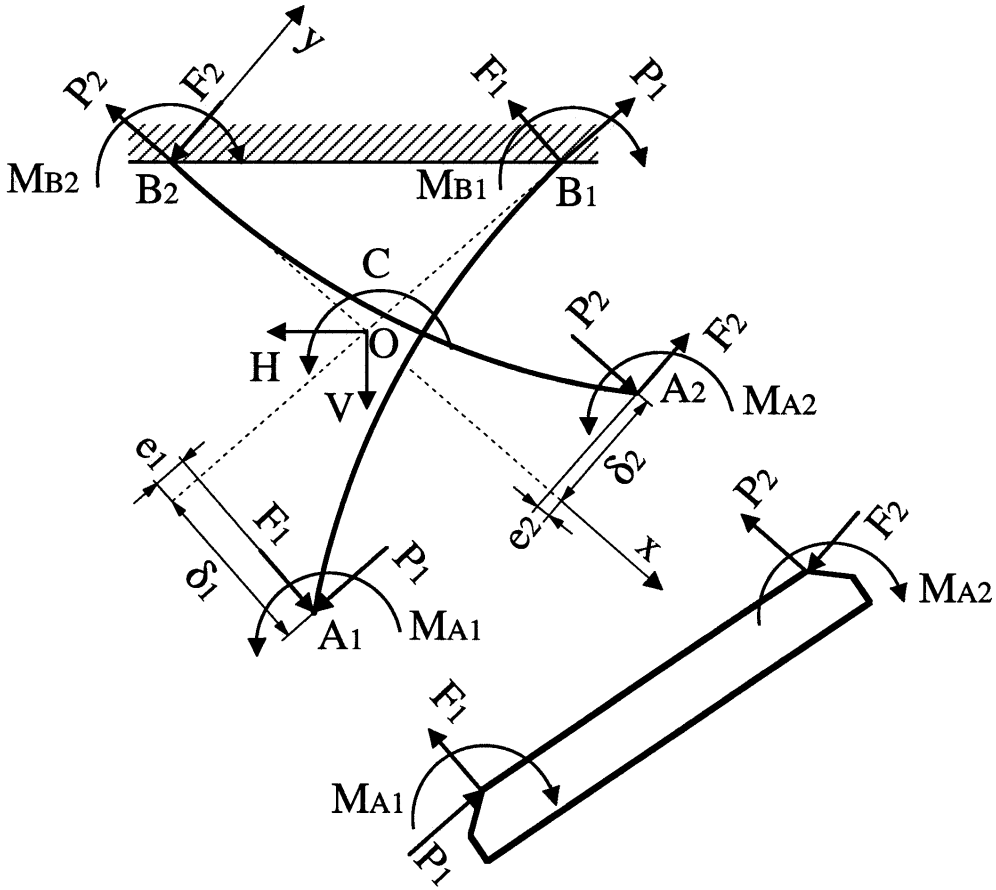

11 variables:

e_1, e_2, δ_1, δ_2, P_1, P_2, F_1, F_2, M_{B1}, M_{B2} i ϑ

Equations: equilibrium of forces and torques for the mechanism, equilibrium of single leaf springs

$$4\beta_{1(2)}(4+\vartheta^2)\left(\beta_{2(1)}\cosh\beta_{2(1)}-\sinh\beta_{2(1)}\right)\left[\frac{1}{2}(v\pm h)-4\beta_{1(2)}^2\right]\pm\beta_{2(1)}^2\beta_{1(2)}\cdot$$

$$\cdot\cosh\beta_{2(1)}\{\beta_{2(1)}[\mp 32+16\vartheta+16\cos\vartheta(\pm 2-\vartheta)+16\sin\vartheta(2\pm\vartheta)+$$

$$+\vartheta^2(\mp 4+2\vartheta\pm\frac{4\coth\beta_{1(2)}}{\beta_{1(2)}}\mp 2\,\mathrm{cosech}^2\beta_{1(2)}\left(1+\cosh 2\beta_{1(2)}\right)+$$

$$\vartheta\,\mathrm{cosech}^2\beta_{2(1)}(1+\cosh 2\beta_{2(1)}))]-2\vartheta\left[4\tanh\beta_{2(1)}(4+\vartheta^2)+\vartheta^2\coth\beta_{2(1)}\right]\}=0$$

[ZS + De Bona, Prec. Eng., 2002]

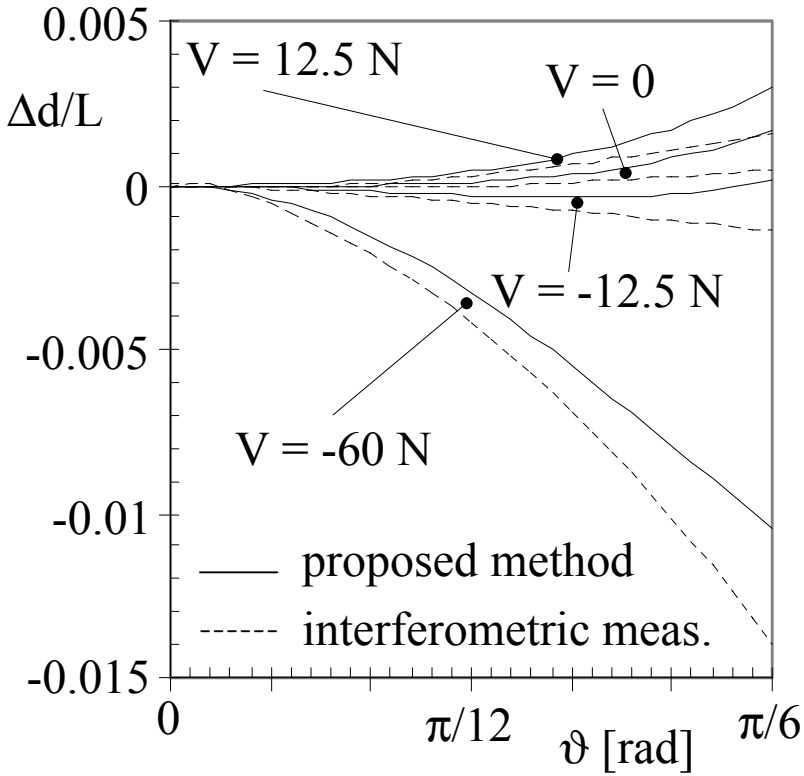

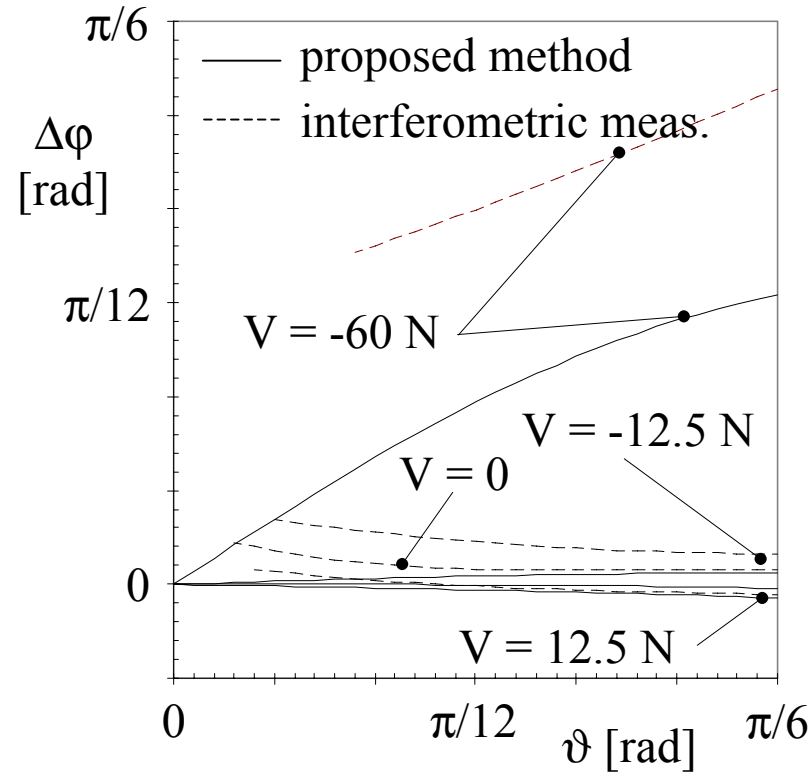

This new analytical method allows the influence of the variation of the axial load on the behavior of the mechanism to be clearly established

In the limit cases of large rotations or external loads approaching the stability limits, the approximations of the curvature formula cause significant errors

[ZS + De Bona, Prec. Eng., 2002]