FLEXURAL HINGES

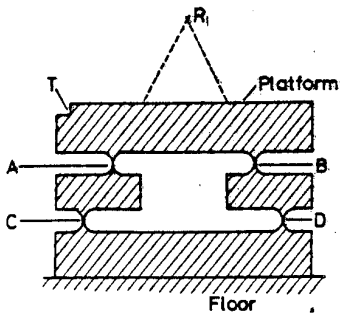

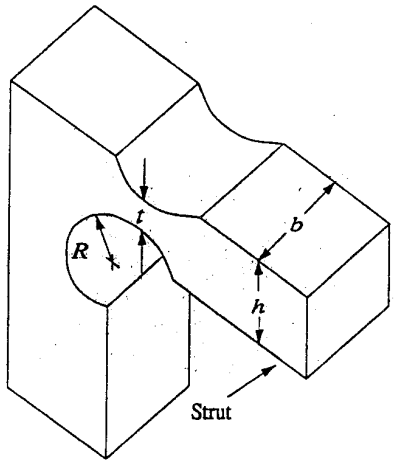

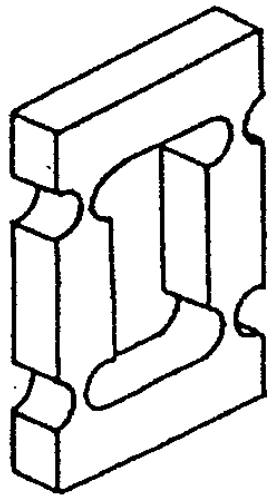

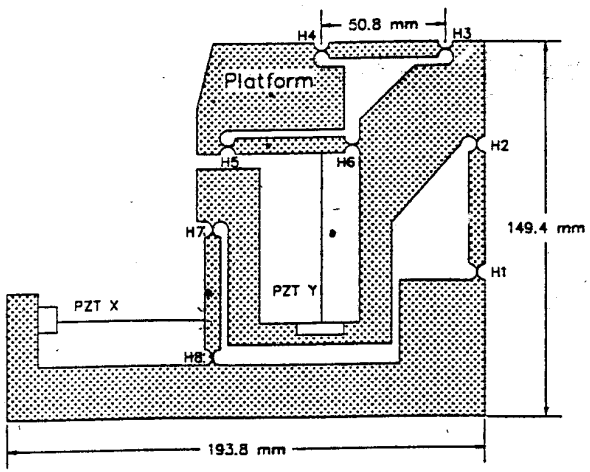

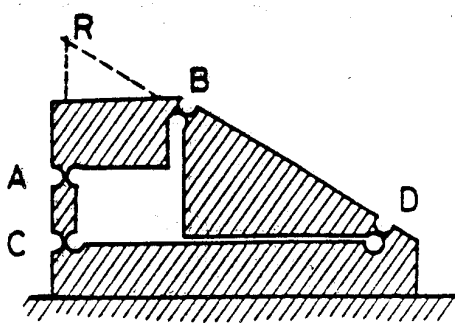

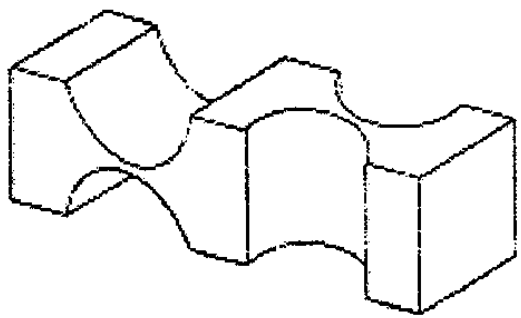

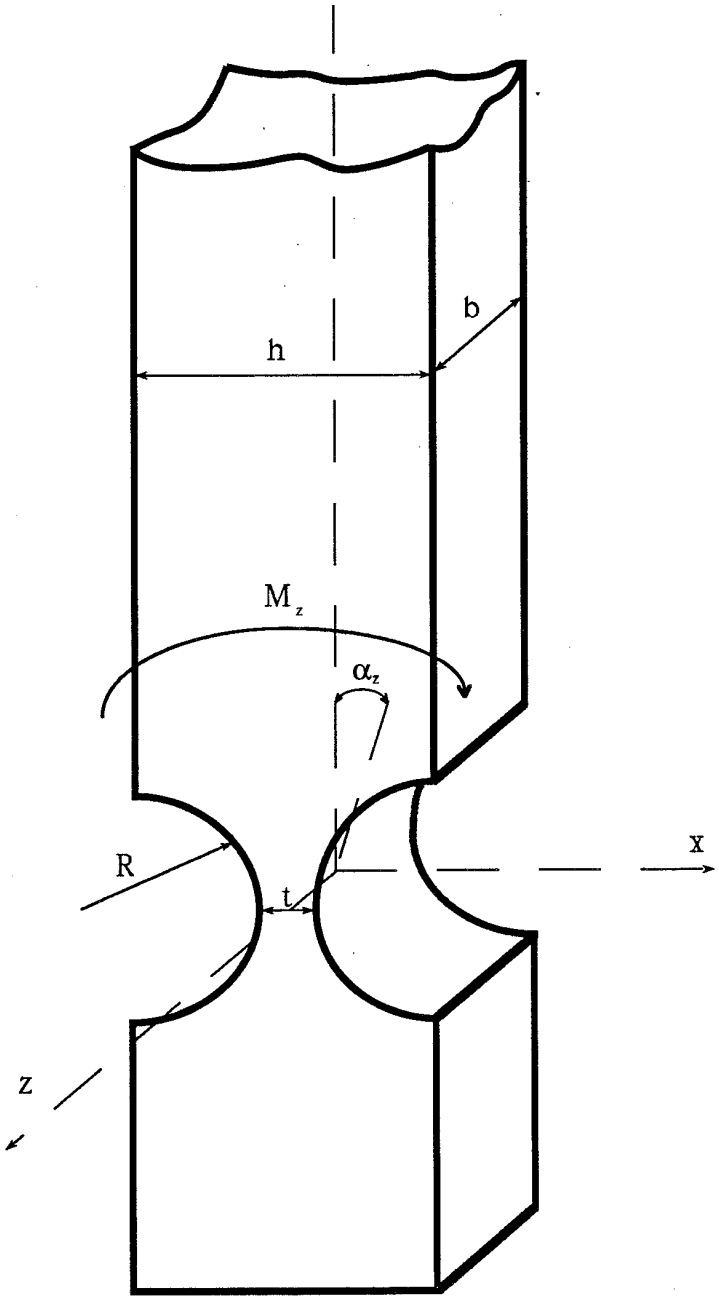

$$\sigma_y = \frac{K_t \cdot M_z \cdot t/2}{I} = \frac{K_t \cdot M_z \cdot t/2}{b \cdot t^3/12}$$

$$\alpha_z = \frac{9 \cdot \pi \cdot R^{1/2} \cdot M_z}{2 \cdot E \cdot b \cdot t^{5/2}}$$

with $K_t = \dfrac{\sigma_{max}}{\sigma_n}$ stress concentration factor

Parallelogram arrangement

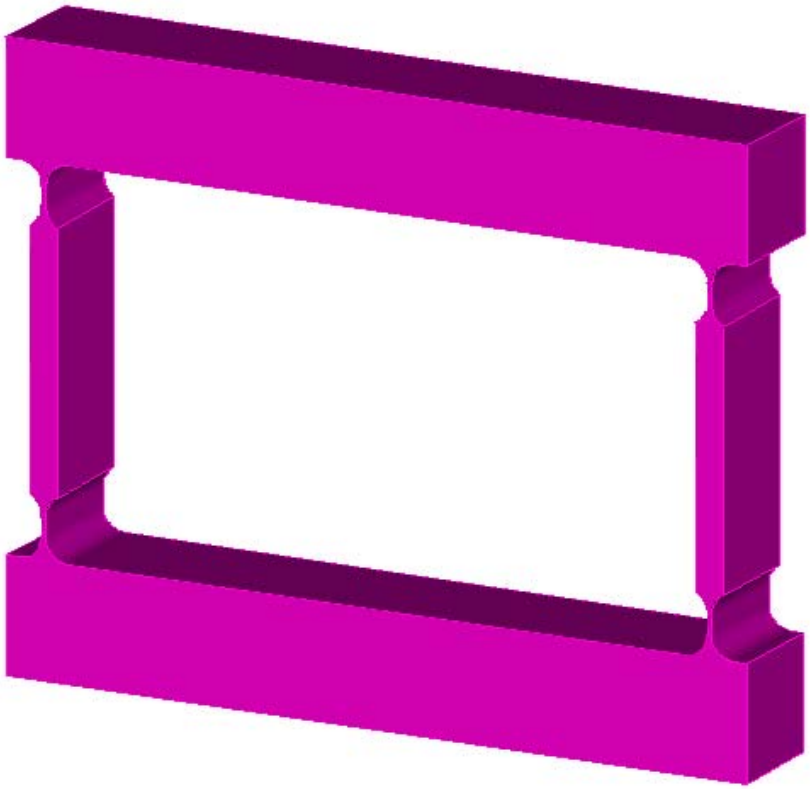

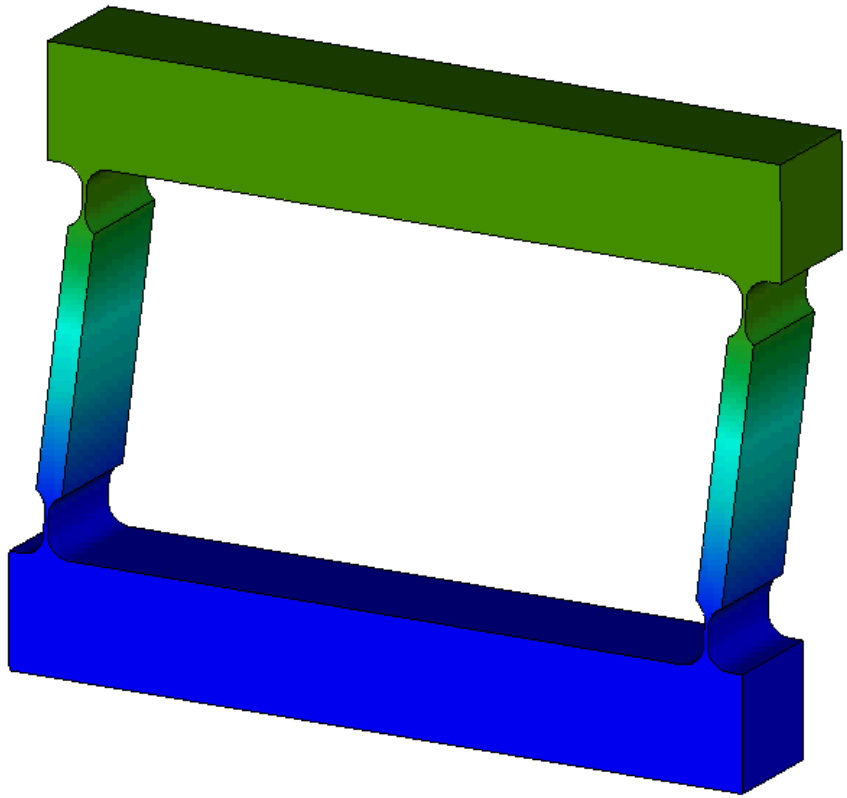

[Courtesy T. Noll, BESSY, Berlin]

Rotation joint

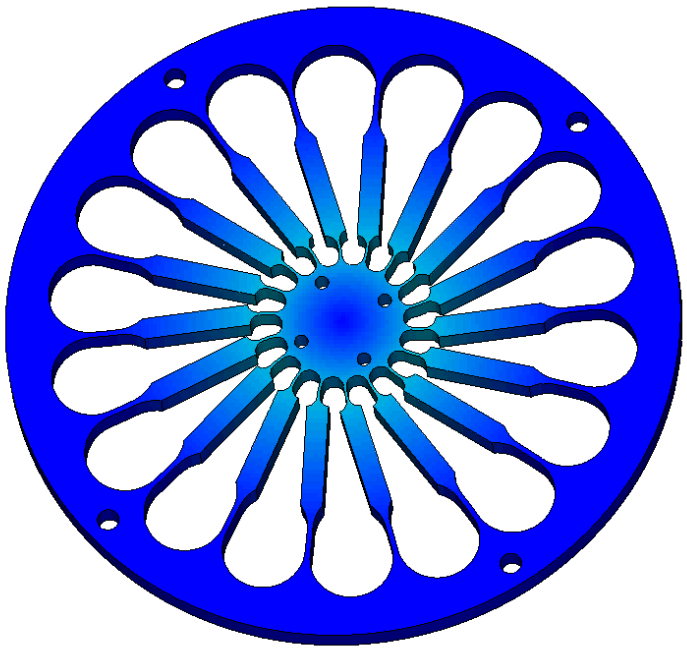

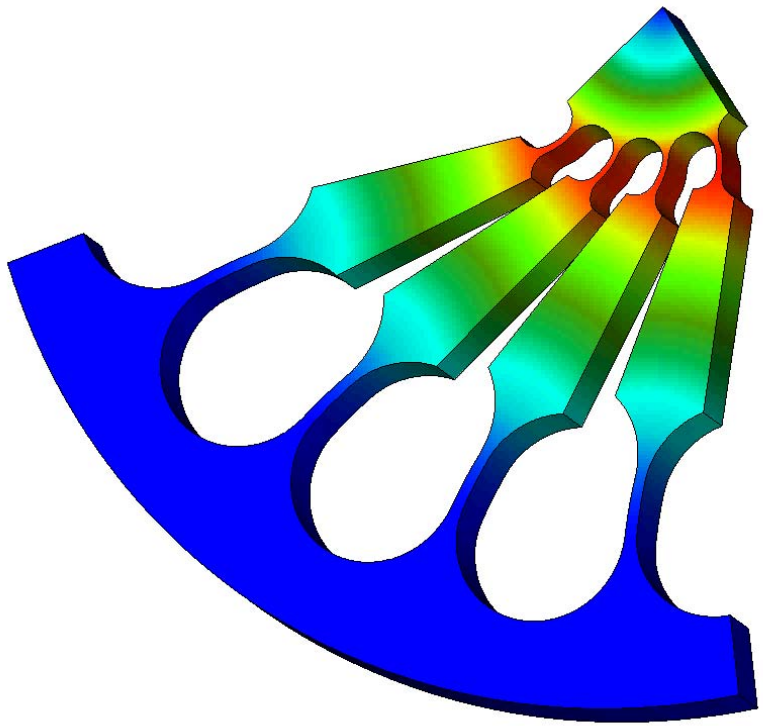

[Courtesy T. Noll, BESSY, Berlin]

The problem reduces here to the minimization of stress levels (maximization of fatigue lifetime) for a given deflection ⇒ optimization of notch shape

Electro-Discharge Machining (EDM)

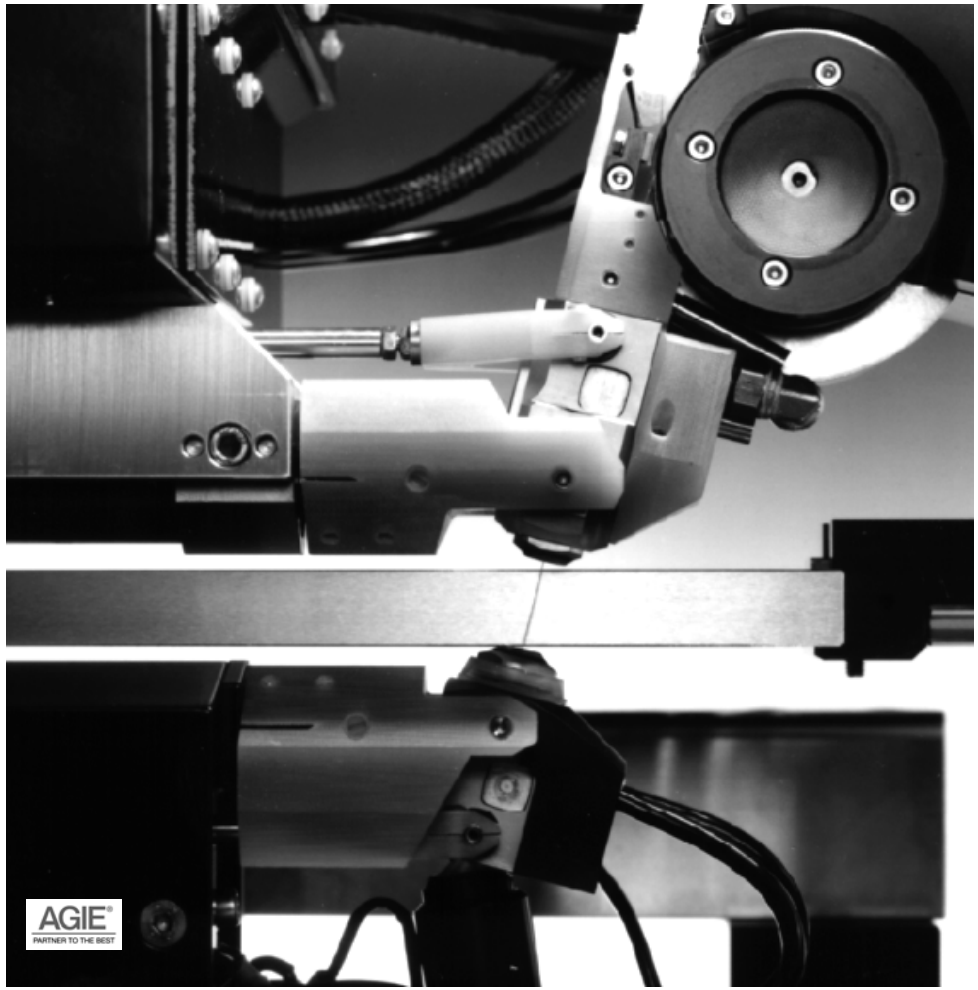

Advantages: small forces during machining, not sensible to hardness, large 'aspect ratios' (dimension-to-detail), high precision, monolithic structures

No monolithic manufacturing → assembly (calibrated mounting jigs and gauges, …) ⇒ more time, more errors

[Ben, 1993]

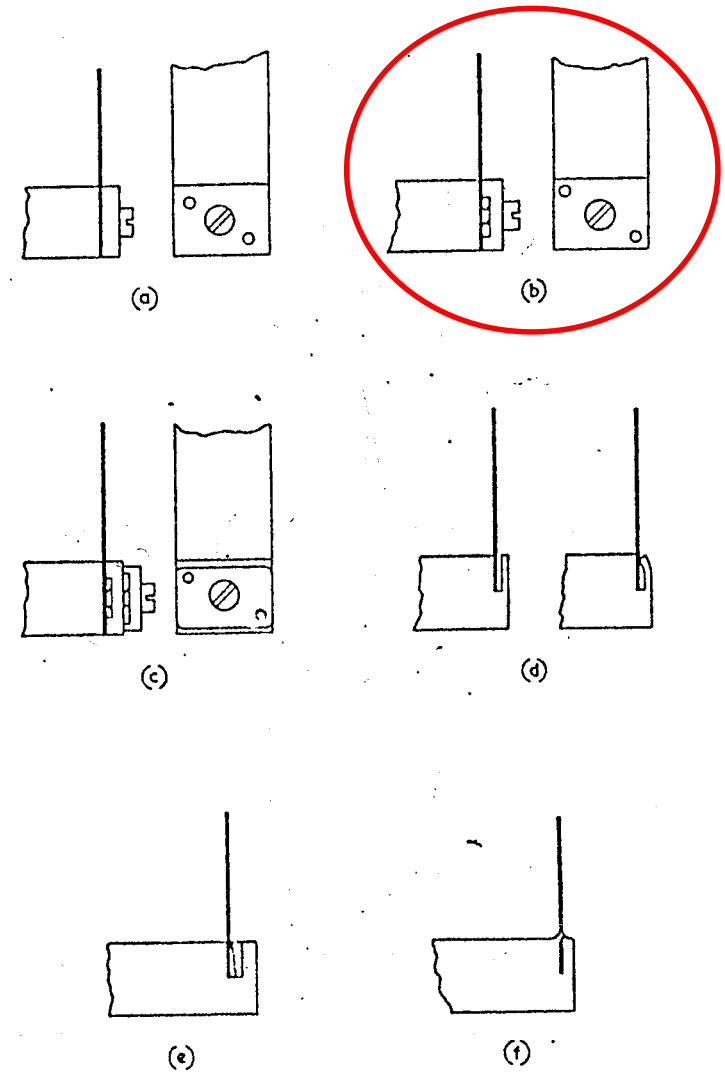

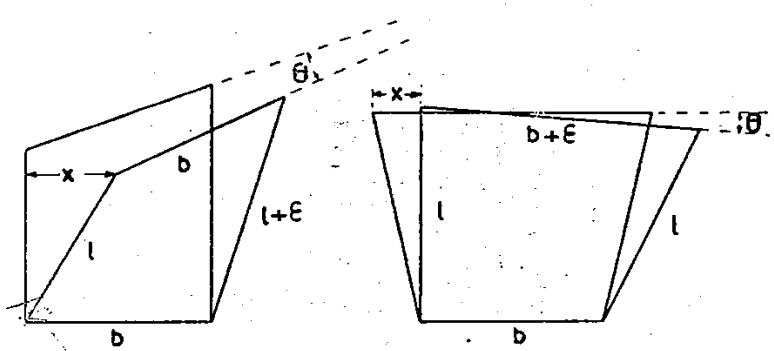

[Jones, J. Sci. Instrum., 1956]

[Nat. Phys. Lab., 1956]

Monolithic manufacturing → no assembly ⇒ no assembling tolerances, no compliance of constrains, less errors

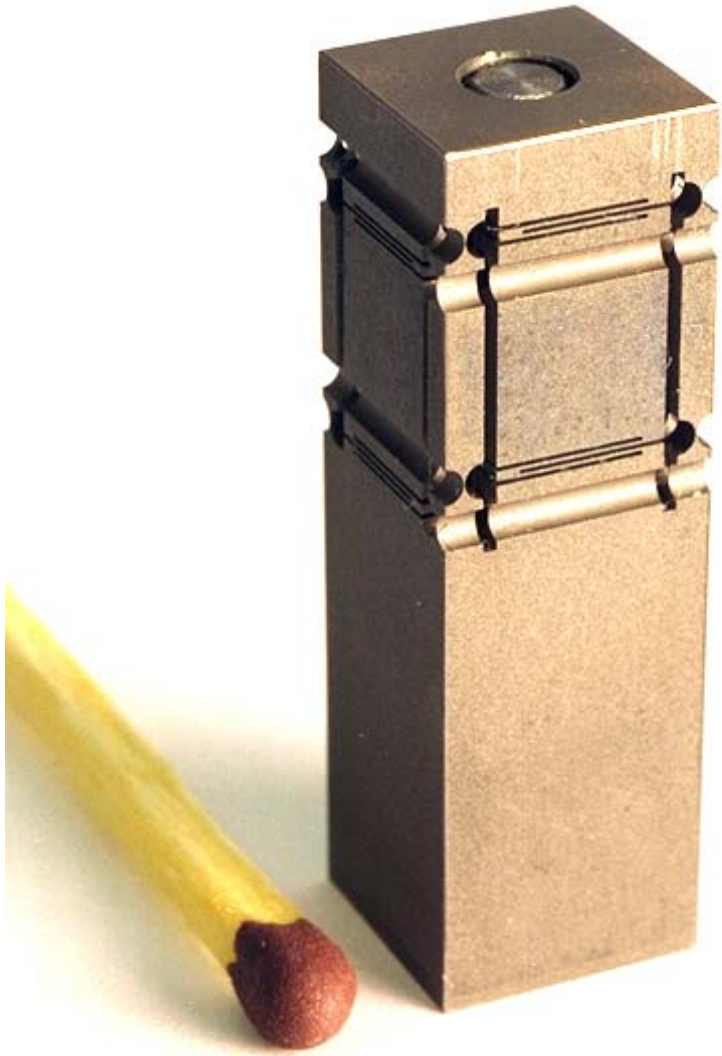

XY stage, t_{notch} = 25 µm, motion range: 0.5 mm

[Henein et al., Proc. Int. Adv. Robotics Prog., 1999]

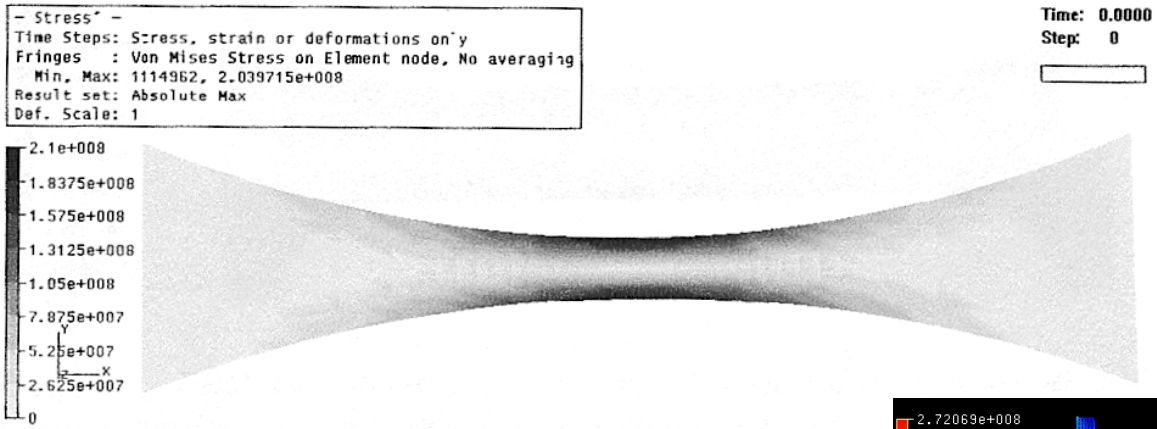

Circular notch shape

Prismatic shape with circular transition (fillet)

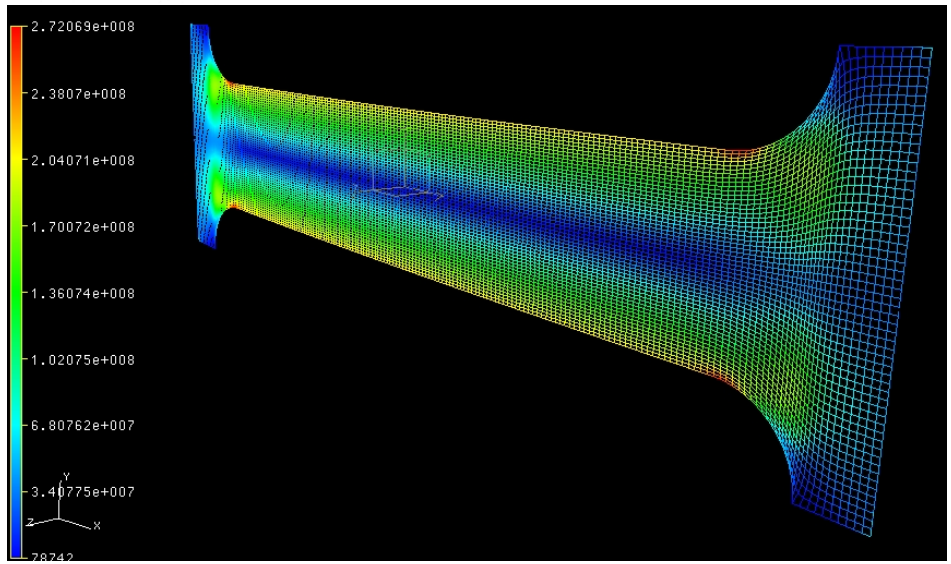

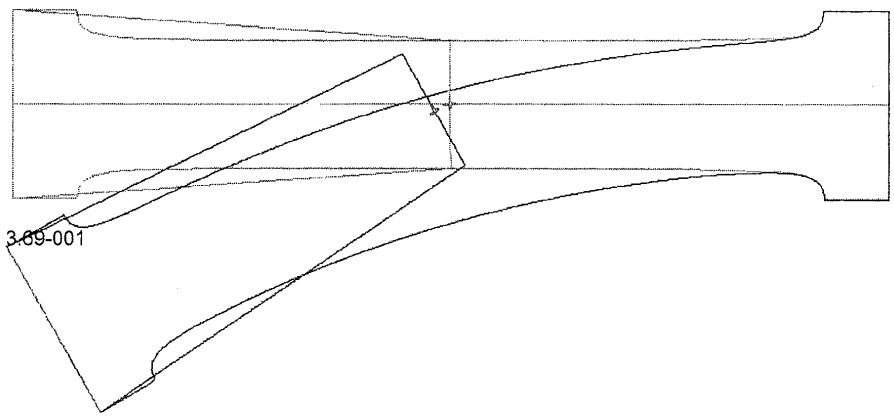

Acceptable parasitic displacements for a given stress?

[ZS et al., MEDSI 04, 2004]

APPLICATION OF COMPLIANT MECHANISMS @ ACCELERATORS

The technological characteristics of SR and other accelerator facilities pose severe challenges in terms of stability and reproducibility of the beam position => optical elements must be moved with resolutions and accuracies in the nm and μrad region in an UHV environment with "hostile" characteristics (thermal variations, vibrations, …)

Compliant mechanisms offer the high-precision coupled with UHV, radiation and high- or cryo-temperature compatibility

They are also characterized by simple, reliable and maintenance free design

Compliant Mechanisms Used @ SLS (1)

High Heat Load Monochromator Crystal Mount – Materials Science Beamline

Collaboration with HASYLAB at DESY, Hamburg (D)

1st mono crystal (Si (111)) absorbs up to 1.1 kW of power (up to 3 W/mm^2)

Elastic hinges in crystal feet decouple it from the support structure and allow the adaptation of its shape

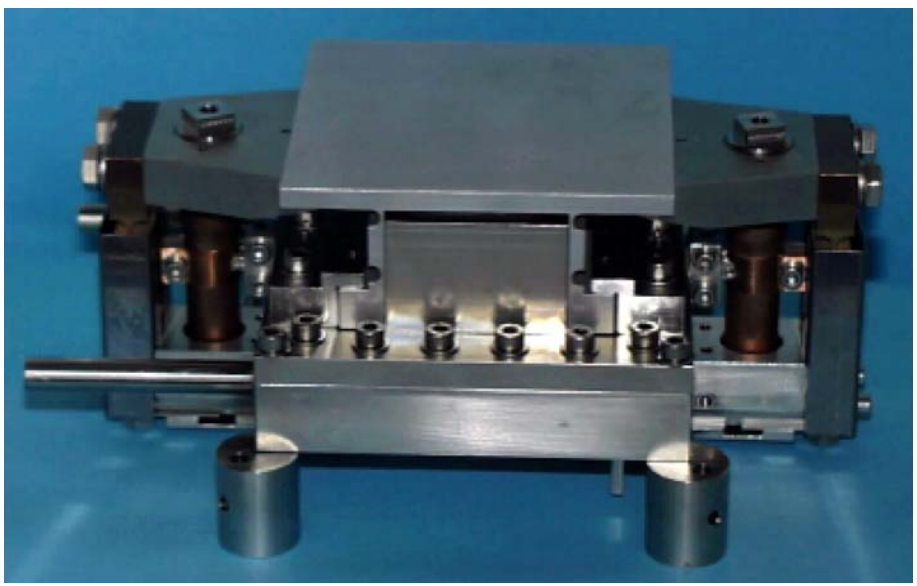

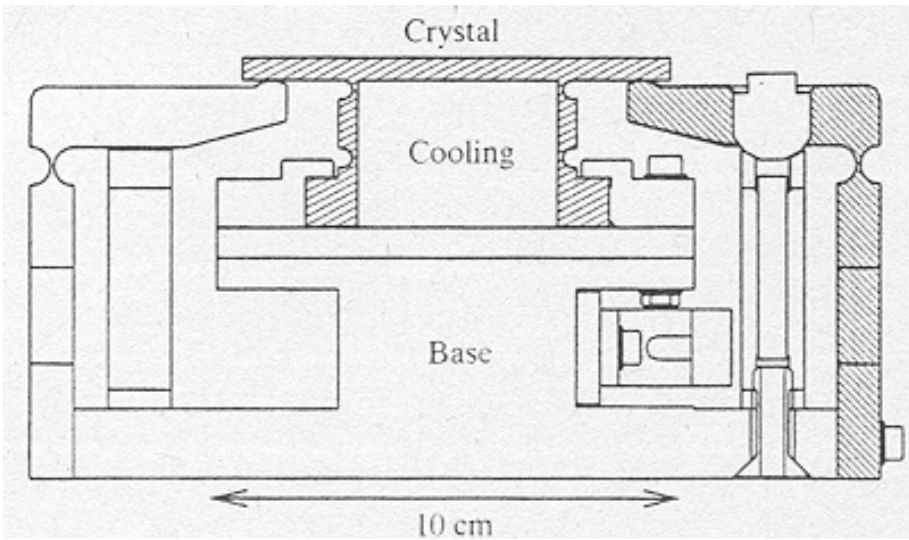

The compensation of the convex bowing of the reflection surface induced by heat load is achieved by pushing upwards via Cu (resistance) rods the crystal "wings"

The supports of the lever arms comprise again a set of flexural elements used to achieve their longitudinal and transversal compliance

Now commercialized through Accel

[Schulte-Schrepping et al., J. SR, 1998]

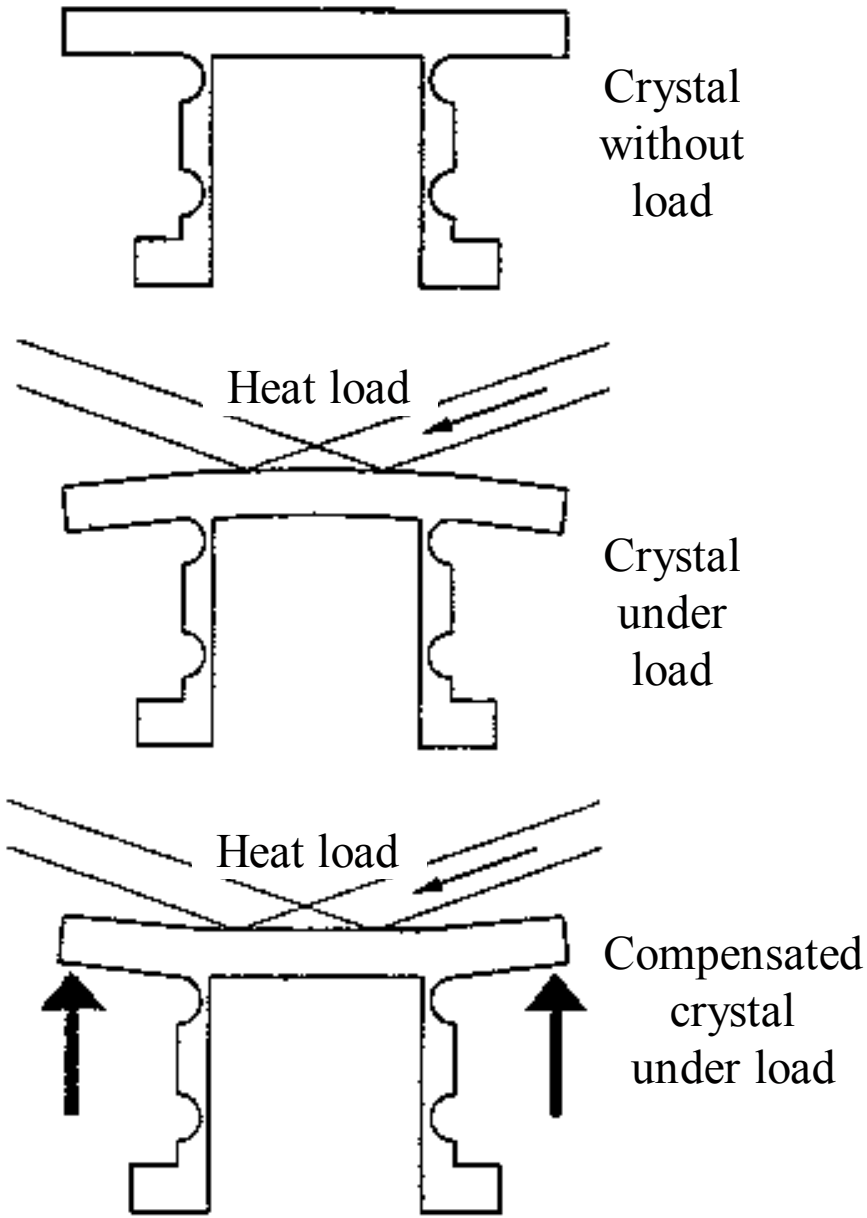

Compliant Mechanisms Used @ SLS (2)

In-Vacuum Dynamic Mirror Bender – Protein Crystallography Beamline

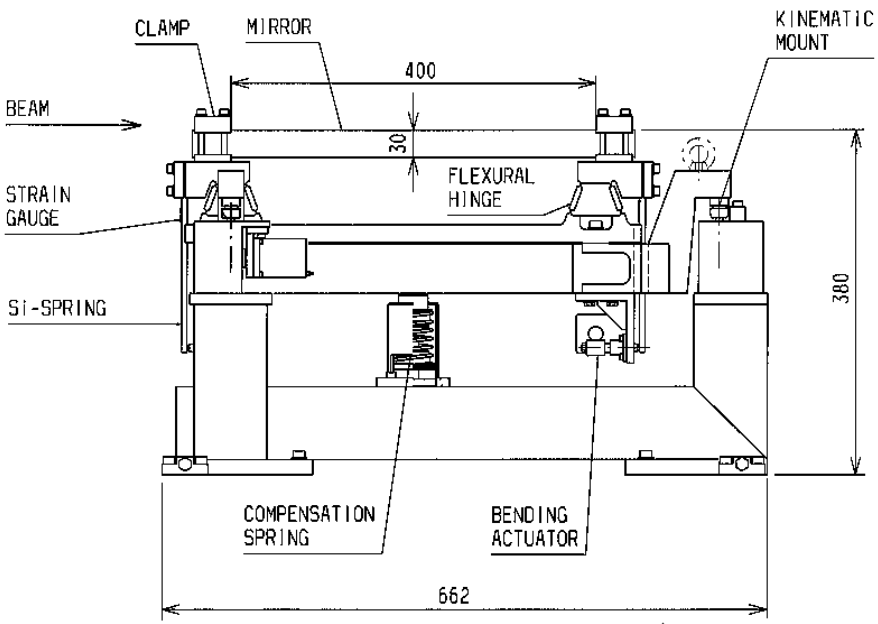

Collaboration with ESRF, Grenoble (F)

Vertical focusing rhodium coated fused silica mirror placed on the same optical table and downstream of the double crystal monochromator

Dynamically bendable providing radiuses of curvature in the 400-12’000 m range via 2 independent bending moments at mirror ends through hysteresis-free Si-springs

The necessary rotational degrees of freedom and the uncoupling of the mirror from its basement are assured through a set of EDM machined flexure hinge based joints

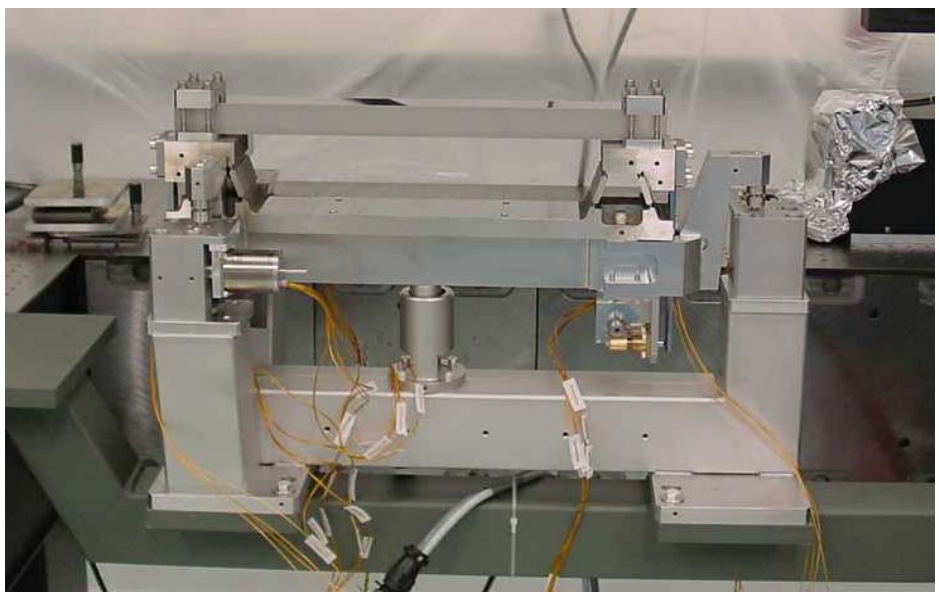

Experience so far: sub-µrad bending reproducibility with an angular rms stability of 2.5 nrad can be obtained

[Schulze-Briese, ZS et al., SPIE, 2002]

Compliant Mechanisms Used @ SLS (3)

Sagittal Crystal Bender – Protein Crystallography Beamline

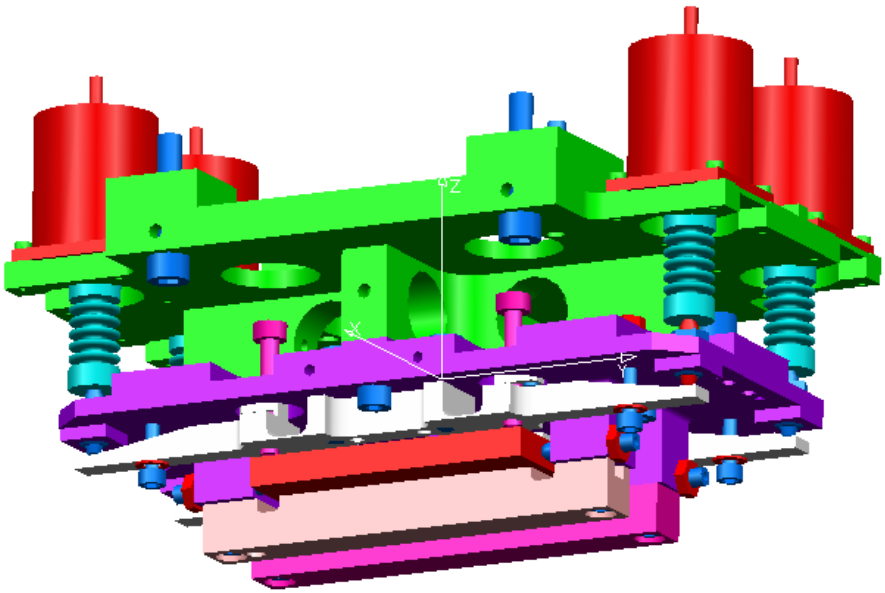

Sagittal focusing of the second monochromator Si (111) crystal

Provides an elegant way for dynamical micro-focusing of undulator radiation in the horizontal plane

Bending achieved by means of 4 motorized micrometer screws and compliant elements-based lever arms (R < 1 m possible)

Tests: at 10 keV a 6 mm beam was focused to 20 μm with an efficiency greater than 90%

Dynamic focusing was also demonstrated

Together with the vertical focusing bender, the micro-focusing of the beam to the designed values (10 x 25 μm^2), as well as a 0.1 eV energy reproducibility of the monochromator, were reached

PSI patented – now commercialized through Accel

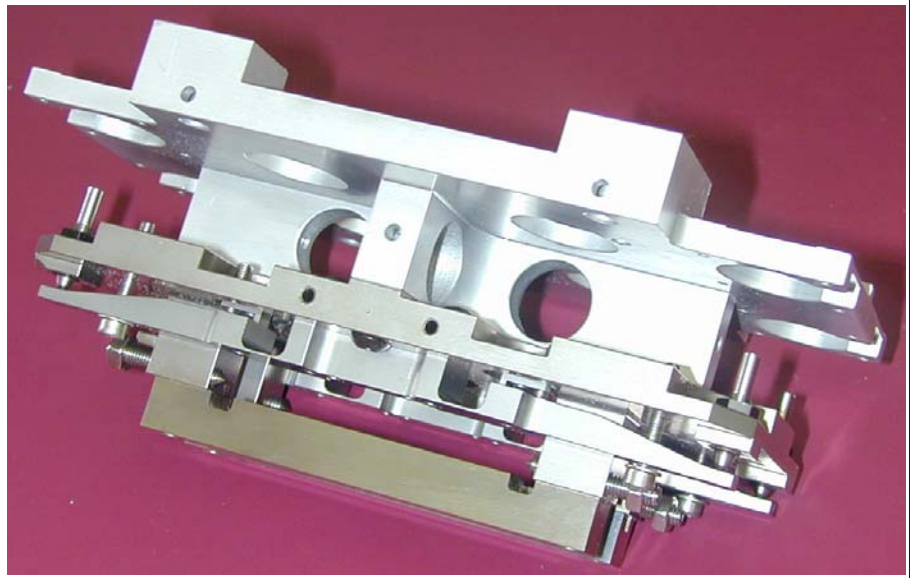

[Schulze-Briese et al., SPIE, 1998]

Compliant Mechanisms Used @ SLS (4)

Flexible Taper Transition – In-Vacuum Undulators

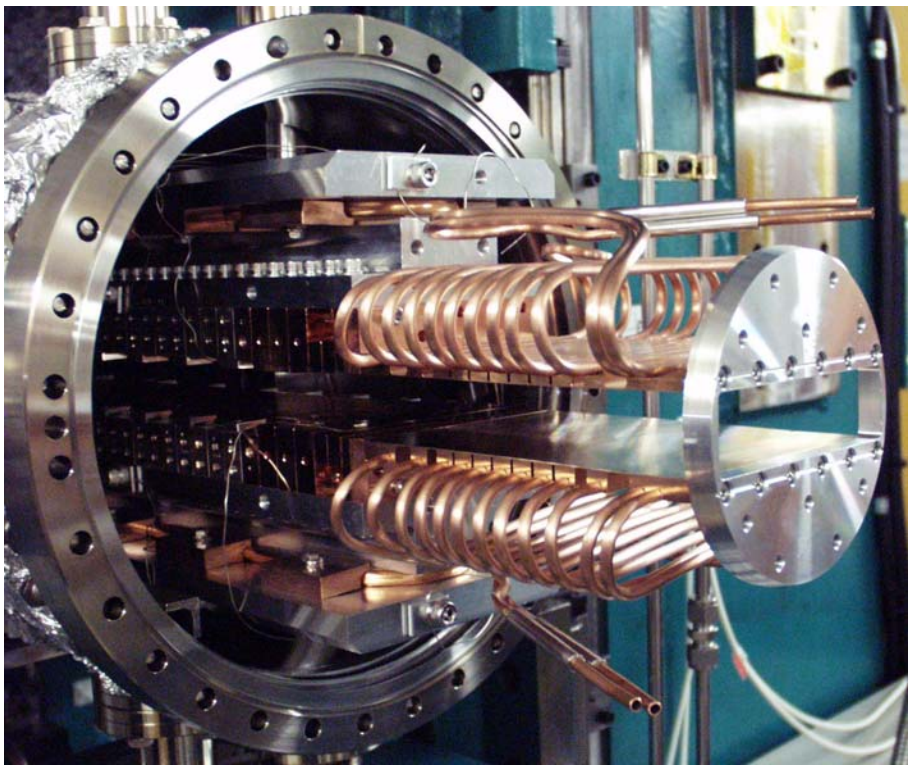

Collaboration with Spring-8, Japan

A ribbon cellular CuBe structure provides a smooth transition between the vertical aperture of the adjacent fixed taper section and the in-vacuum magnet carrying beams of the undulator, thus minimizing any impedance discontinuity

Shape optimized via non-linear FEM analysis to increase fatigue lifetime

Further development step: longitudinal compliance was assured via a parallel spring translator (+ a flexible-blades based transition) thus avoiding eventual axial-stresses-induced yielding due to the differential thermal expansion of the UHV chamber and the magnet carrying beams during bake-out

Could be adopted also for SLS storage ring scrapers

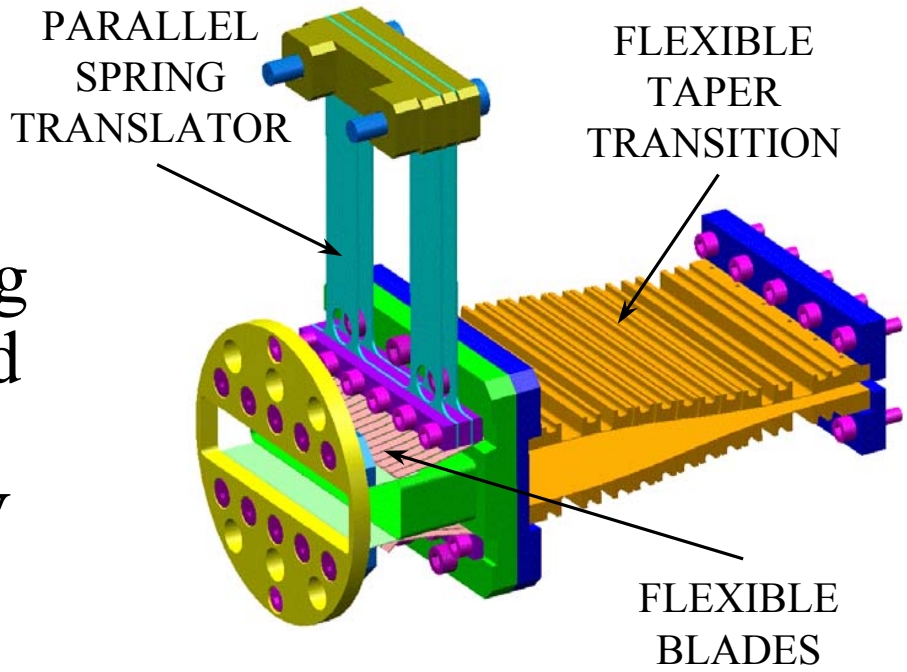

[Reiser, ZS et al., MEDSI, 2002]

Compliant Mechanisms Used @ SLS (5)

Low Emittance Gun

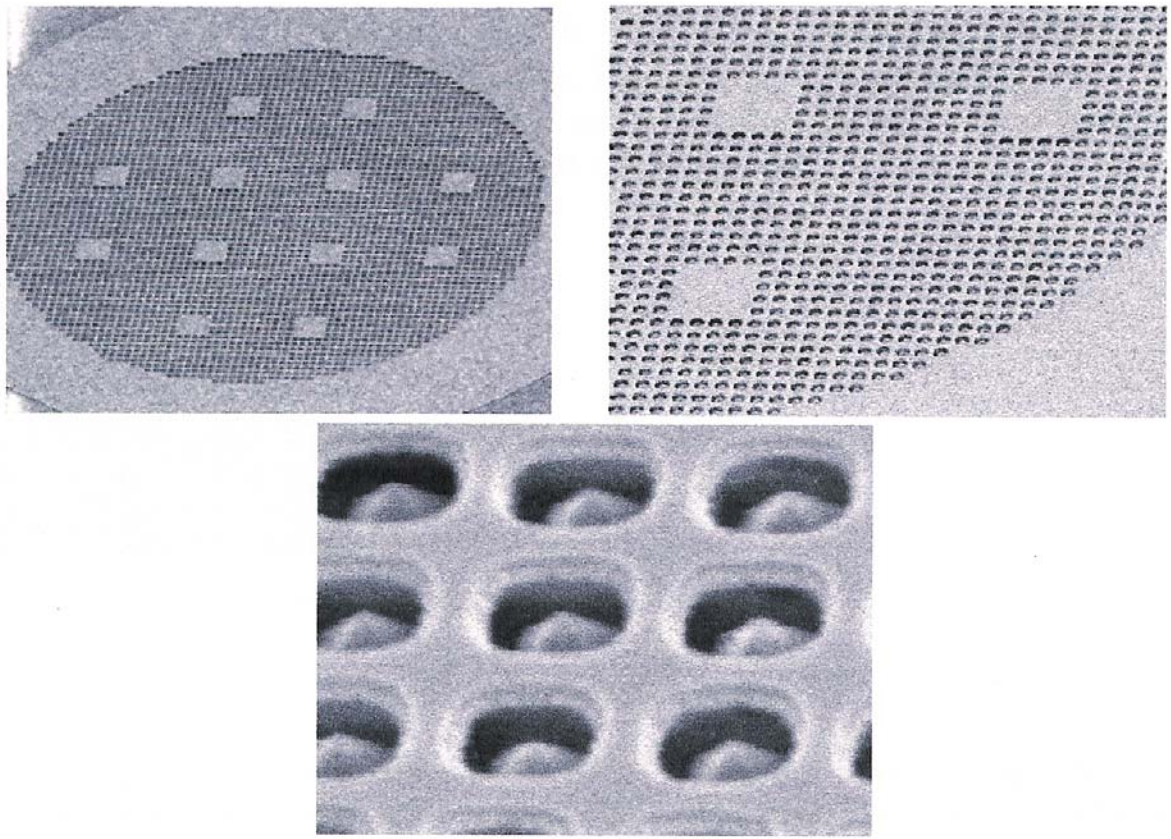

SEM pictures of a Field Emitter Array (ø ~ 200μm) used for the Low E

$\varepsilon \sim 5 \cdot 10^{-8}$ m·rad (today 10^{-6}), I = 20 kA/cm^2, E = 1000 MV/m

To characterize the nano-tips: SAFEM (Scanning Anode Field-Emission Microscope) based on flexures:

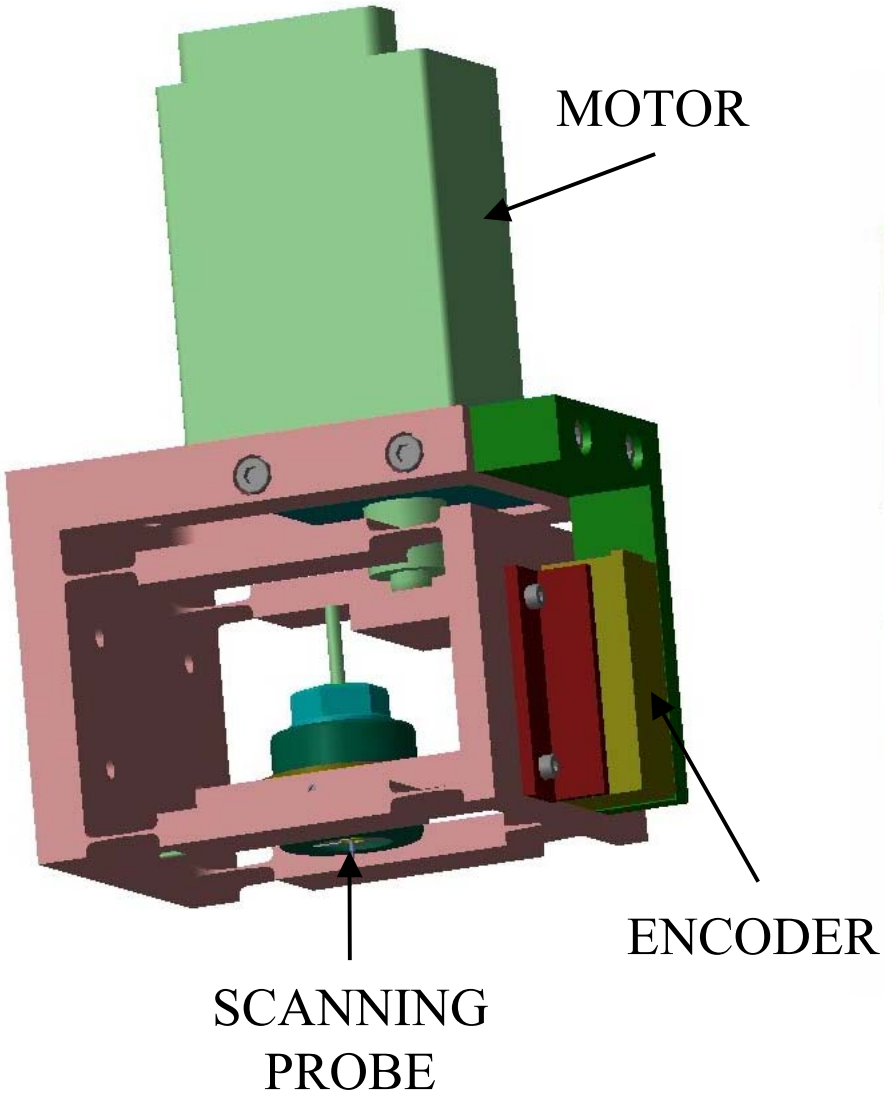

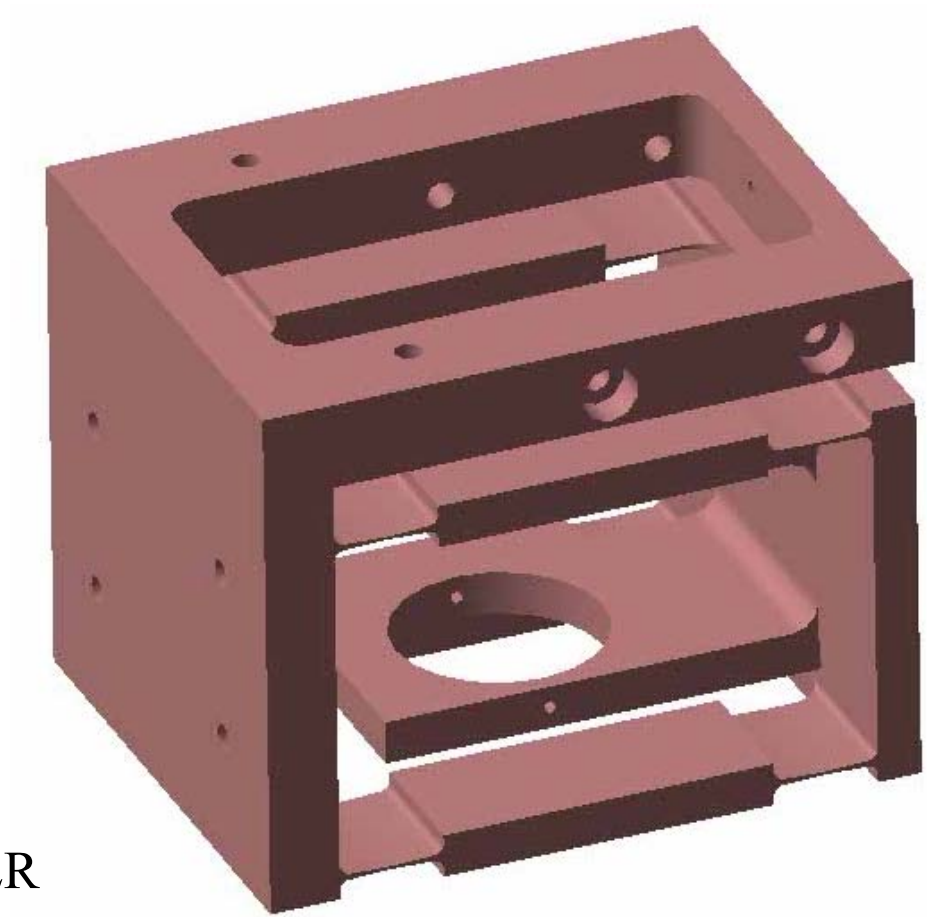

Compliant Mechanisms Used @ SLS (6)

Limit switch for the X04S W61 wiggler

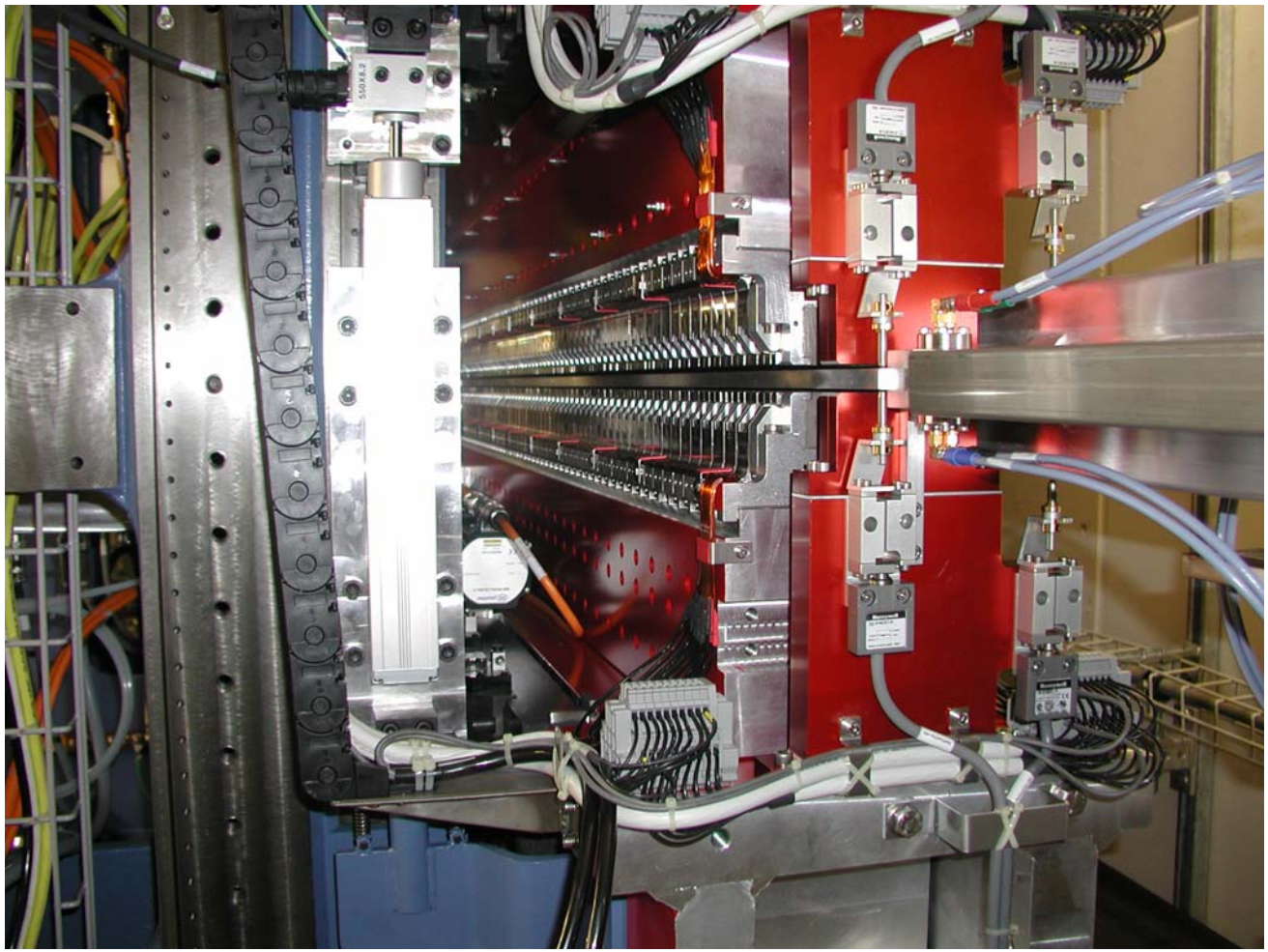

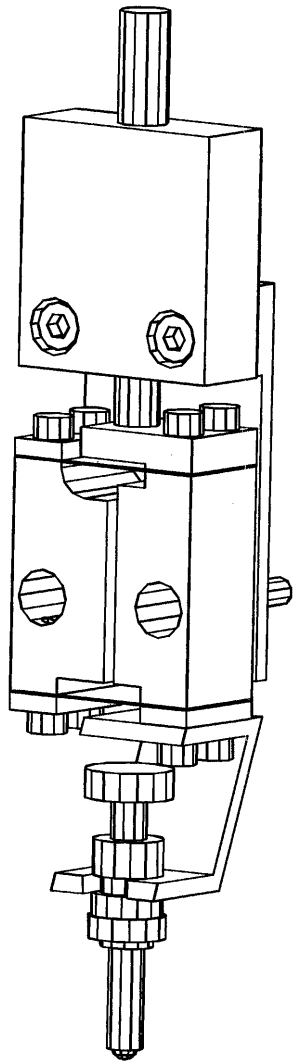

Redundant safety @ minimum gap

Compliant Mechanisms @ Other SR Facilities

Wire EDM machined compliant mechanisms have widely been applied at **ESRF** to bend Bragg-crystals or multilayers with µrad accuracy → very high levels of know-how

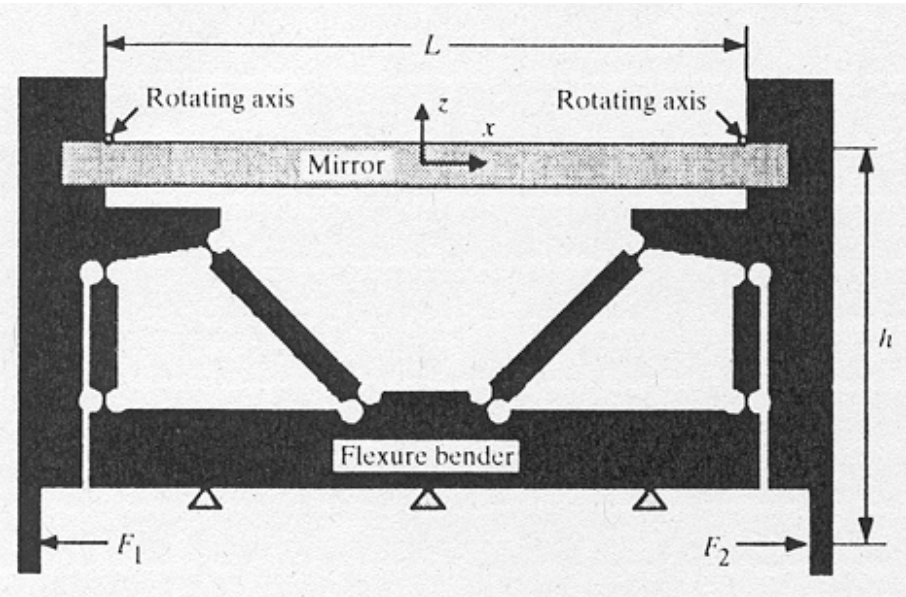

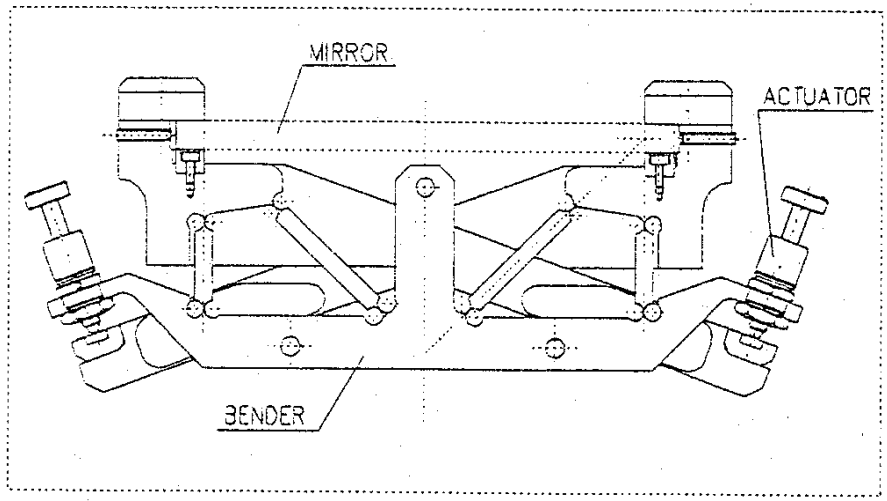

[Kirsch, U. Dortmund, 1993] [Zhang et al., SRI, 1997]
[Zhang et al., J. SR, 1998] [Freund et al., SPIE, 1998]
[Lieb, U. Heilbronn, 1998] [Ziegler et al., NIMA, 2001]

ESRF sagittal bender (now commercialised through Oxford Instruments and Accel) used also @ SLS Materials Science beamline: stepper motors driven, ribbed (**compliant**) crystal configuration → reduced anticlastic curvature while approaching very nicely a smooth cylindrical shape; bending radius: 1.5 ÷ 20 m, focal spot widths < 300 μm in the 8 ÷ 17 keV energy range

[Freund et al., SPIE, 1998]
cf. [Artmiev et al., NIMA, 2001]

KB mirror-bending mechanism, Lawrence Berkeley National Lab. (USA): for submicron X-ray diffraction (beam sizes in sub µm range), bending of KB mirror via asymmetric torques to an elliptic shape, rms slope errors: 0.6 µrad, FWHM X-ray spot size: 0.7 µm

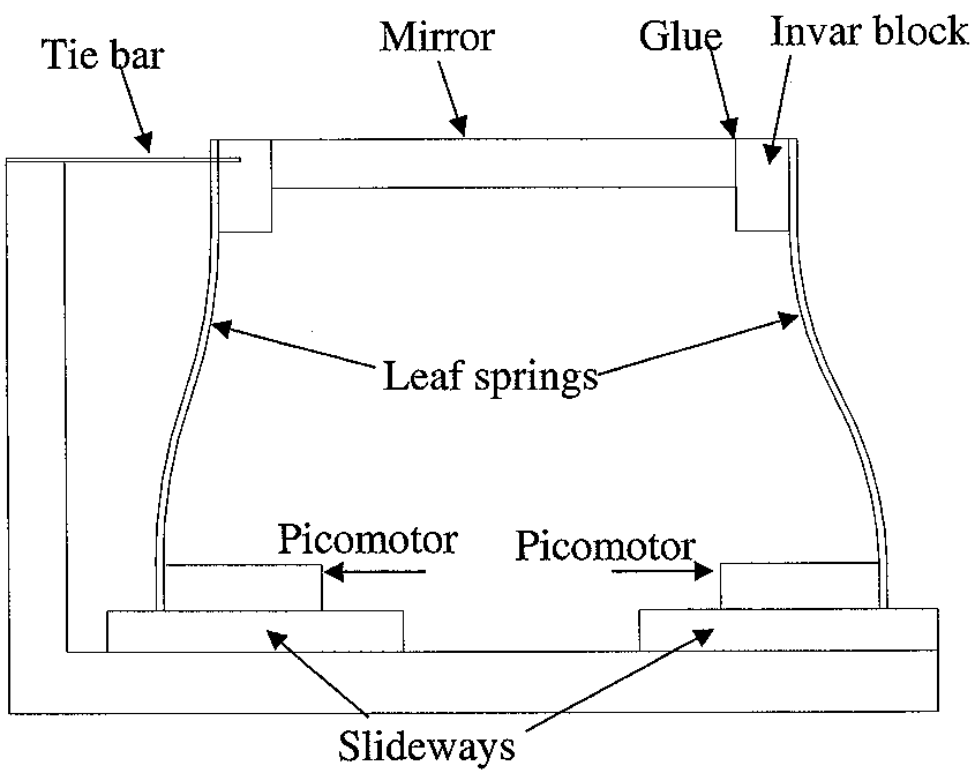

[MacDowell et al., NIMA, 2001]

Monolithic aspherical grating bender, SR Research Center, Taiwan: fixed center point (to within ~ 1 μm), reduced height (50 mm), stainless steel body, PZT actuated, adjustable 3rd order polynomial surface profile, bending radius ≥ 27 m, hinge thickness: 0.3 mm, rms slope errors in the μrad range, repeatability: 0.1%

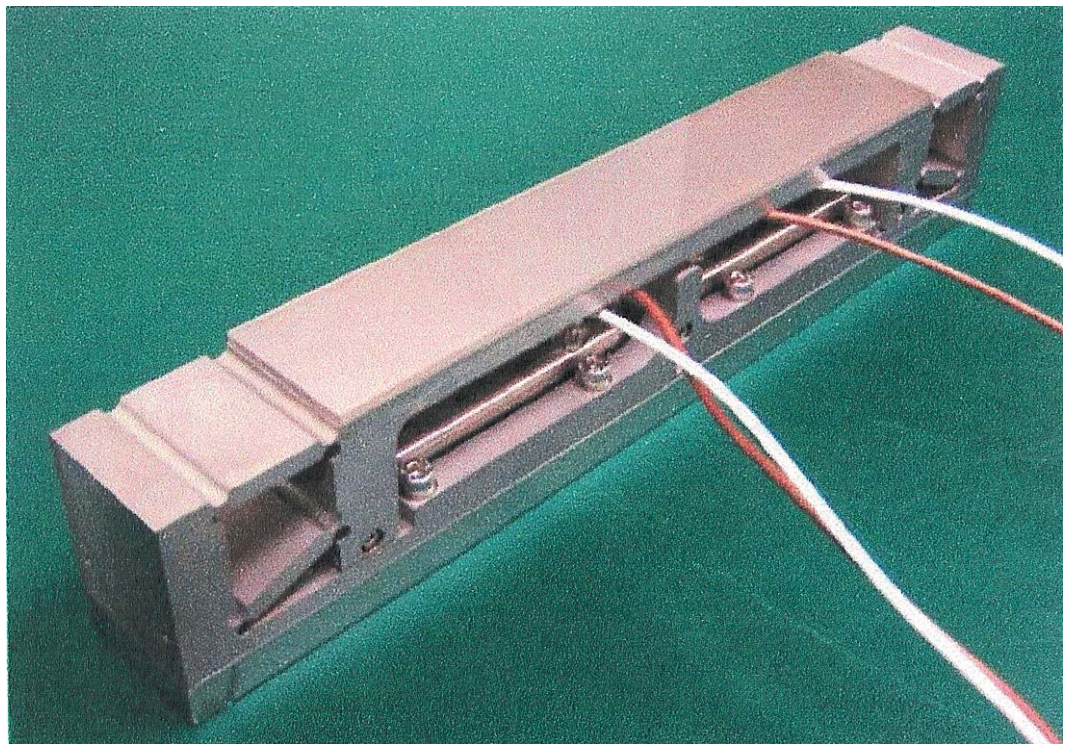

[Tseng et al., MEDSI, 2002 & J. SR, 2003]

Mirror manipulator, Elettra, Trieste (I): remotely controlled pitch and yaw of a plane mirror with an accuracy better than 0.1 μrad

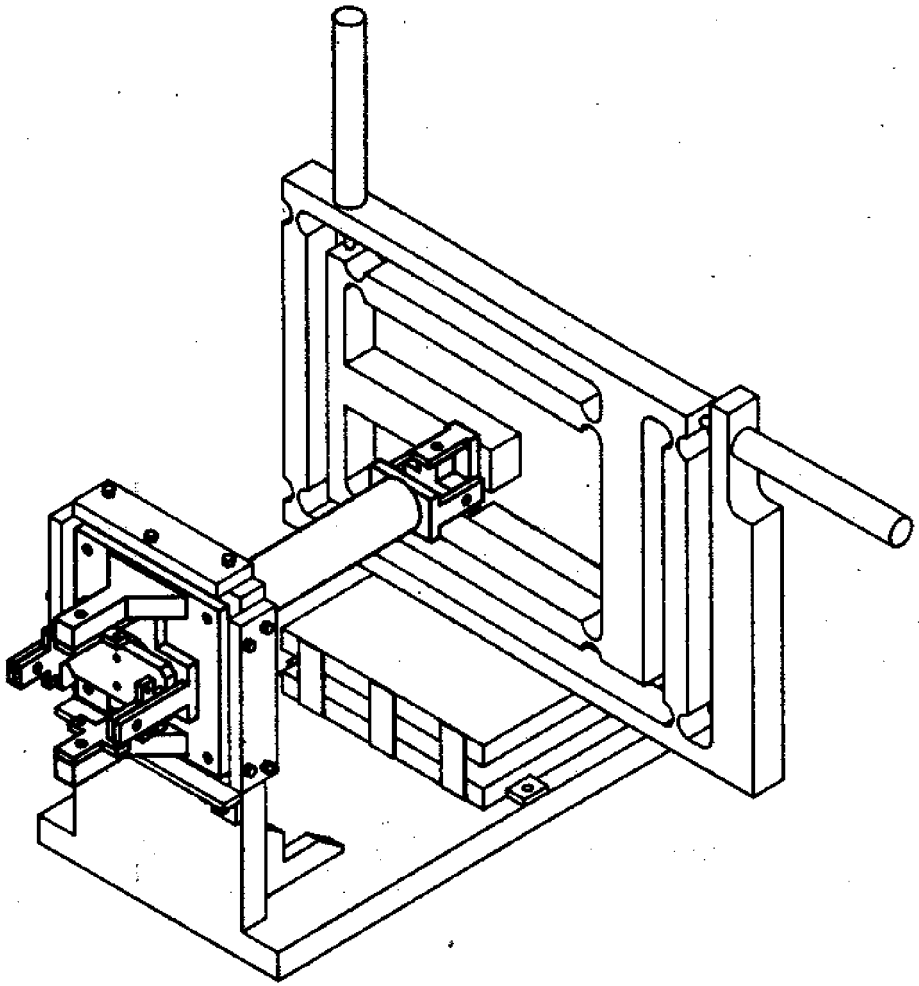

[Rosei, Rev. Sci. Instr., 1992]

High-stiffness weak-link mechanism, APS, Argonne (USA): produced via lithographic techniques & stacking several thin metal sheets, used to position an assembly of monochromator crystals obtaining a meV bandpass; 20 ÷ 50 nrad resolution on a few degrees motion range, retains advantages of compliance while overconstrain seemingly limits parasitic motions and increases dynamic stability

PICOMOTOR + PZT & CAPACITIVE GAGE

BASE WEAK-LINK MECHANISMS

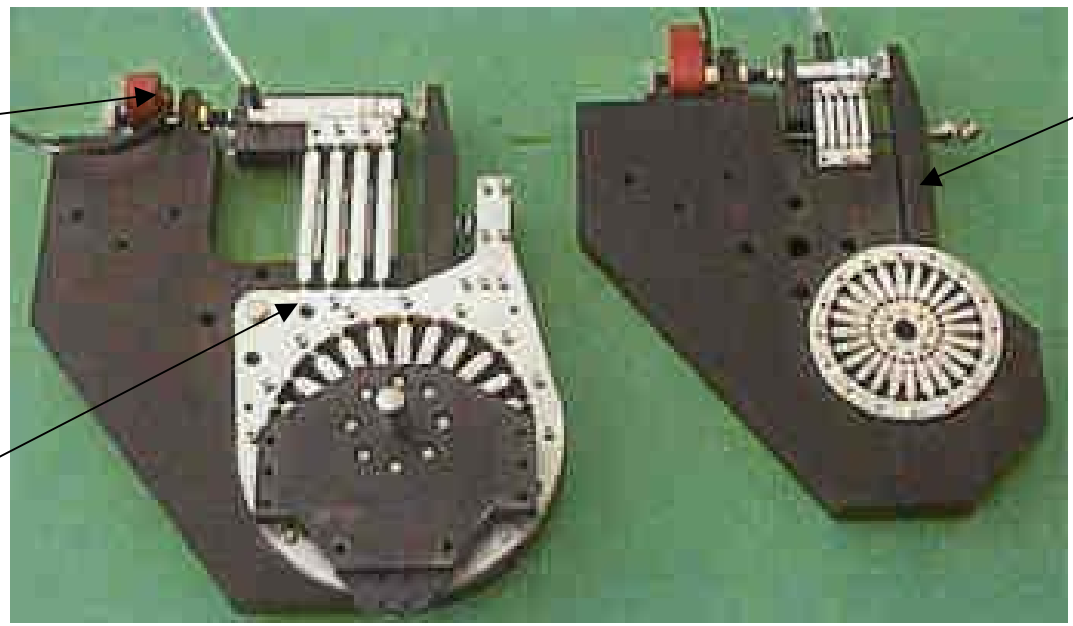

SINE-BAR (PITCH ADJUSTMENT)

[Shu et al., MEDSI, 2000 & NIMA, 2001 & MEDSI, 2002]

Linear translator with sub-Å resolution and 50 mm travel range, APS, Argonne (USA): similar production and design procedures as in the above case, driven via a PZT actuator, feedback: "laser-Doppler linear encoder" (multiple reflections provide proportionally increased resolution (sub Å) on a 300 mm range, compact set-up: 150 x 370 x 60 mm) ⇒ 1 Å steps achieved

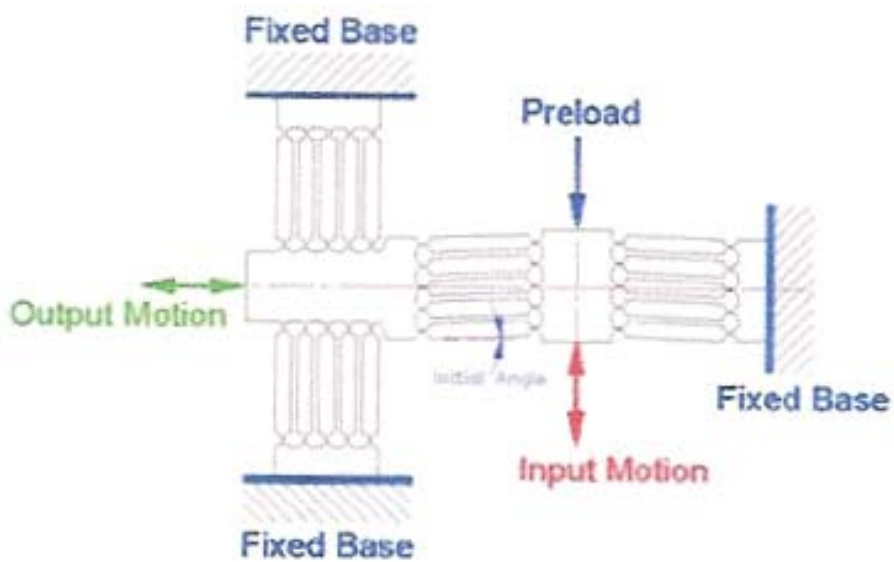

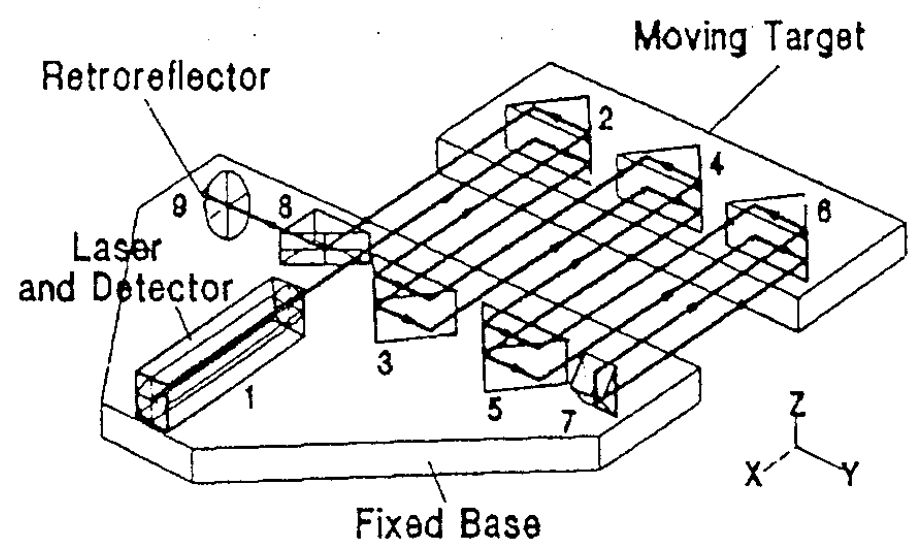

Laser beam reflected 12x back and forth between fixed base and moving target

[Shu et al., MEDSI, 2002]

[Shu et al., SPIE, 1998 & J. SR, 1998]

Monolithic Al flexible 2 axes mirror support, BESSY, Berlin (D): two independent 1° perpendicular rotational DOFs for the IR beamline, stepper motor driven, high dynamic stiffness, reduced parasitic motion

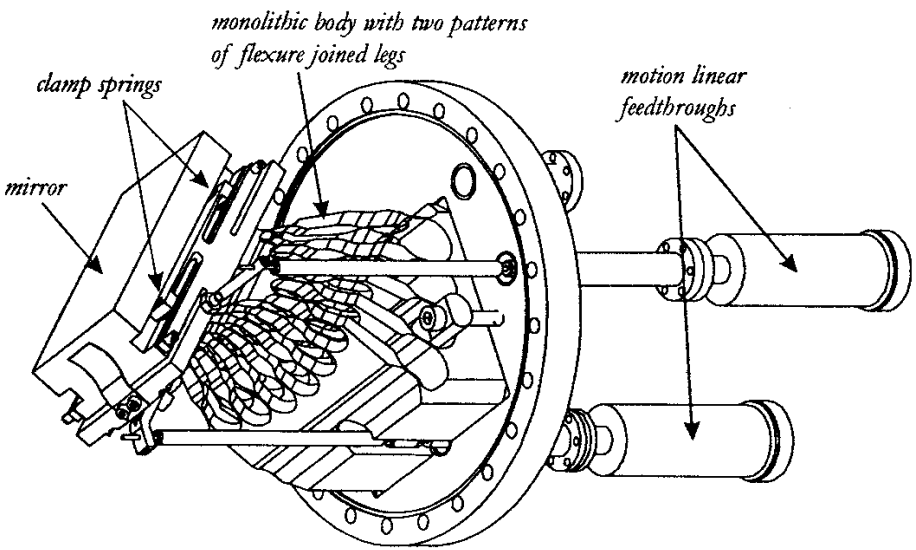

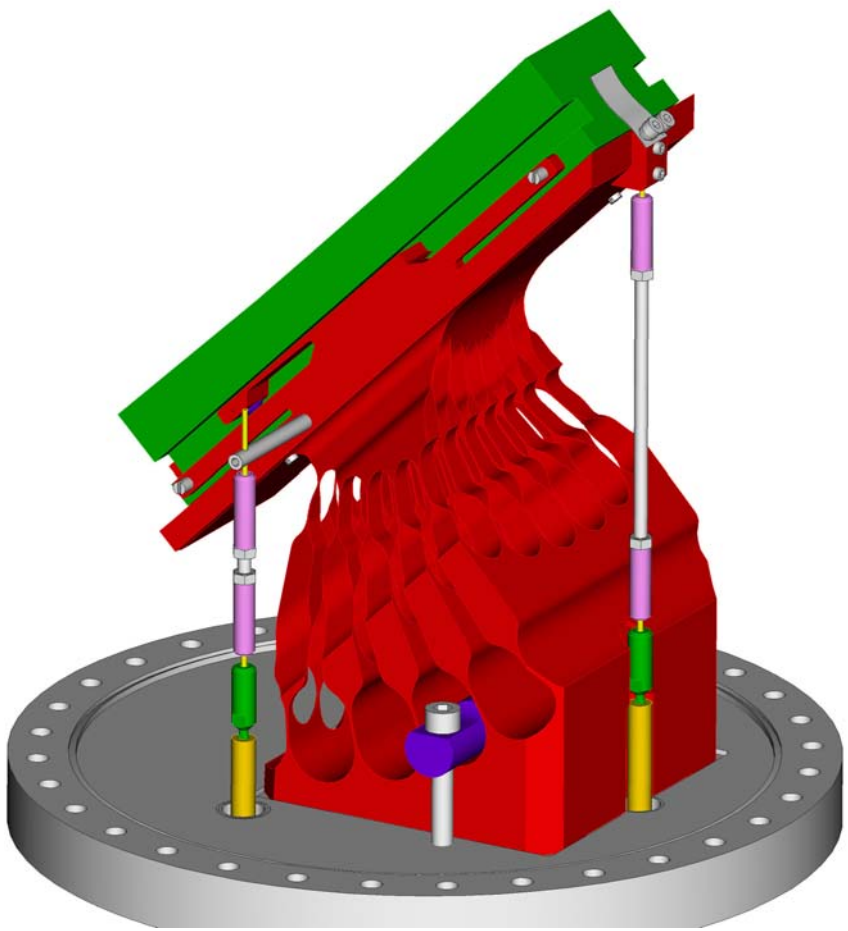

[Noll, MEDSI, 2002]

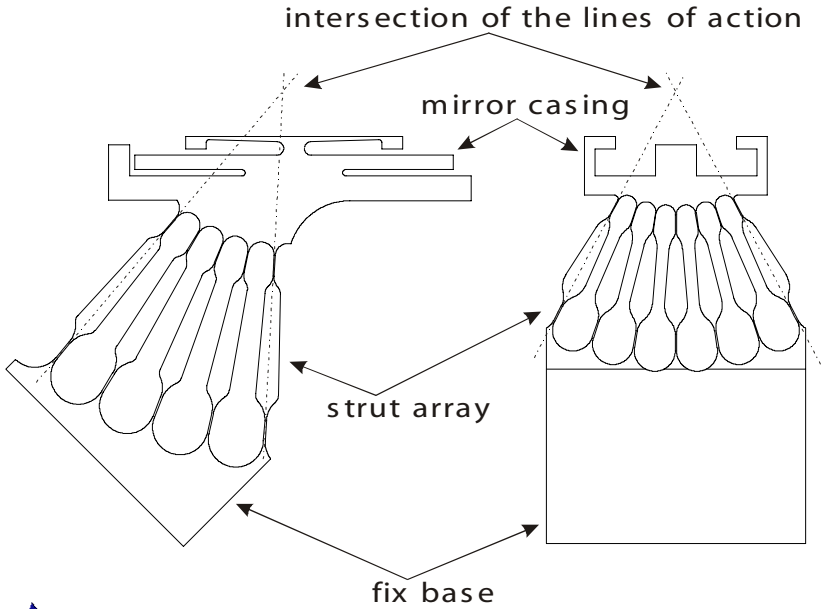

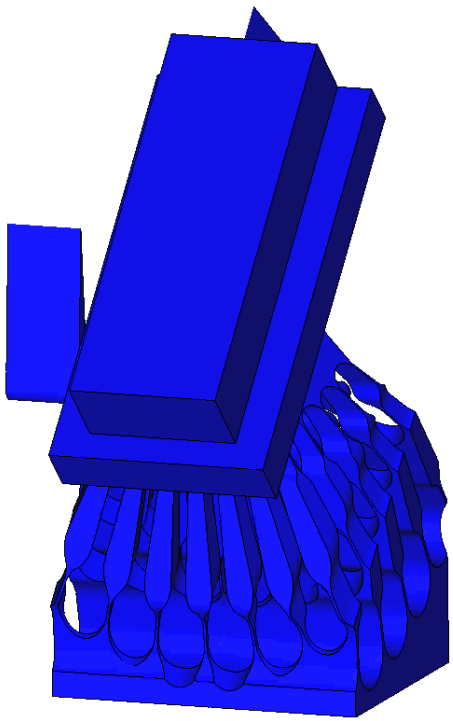

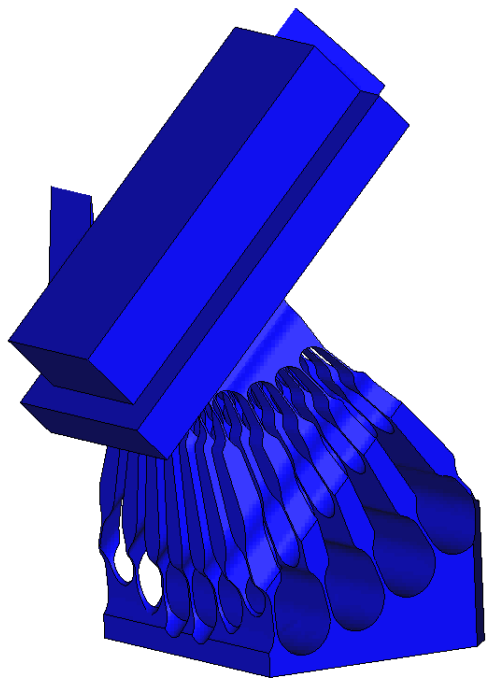

[Courtesy T. Noll, BESSY, Berlin]

Application of compliant mechanisms in other fields: metrology, semiconductors (wafer steppers), optical devices, aerospace, astrophysics, MEMS, machine tools, robotics, motors, manipulators, medicine, sci. instruments, …

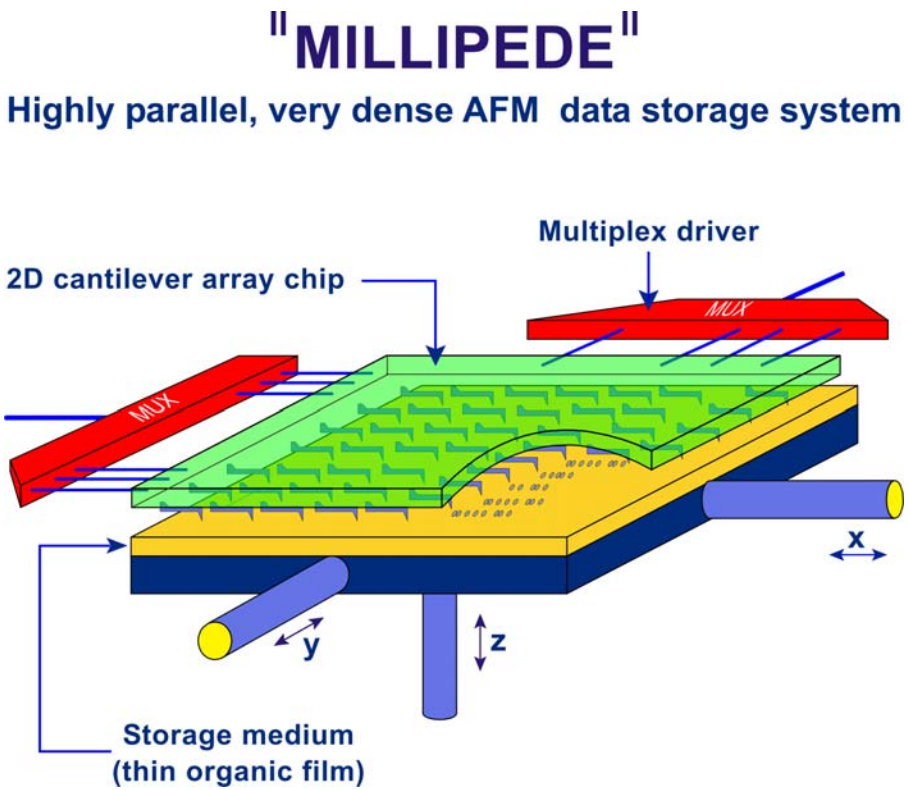

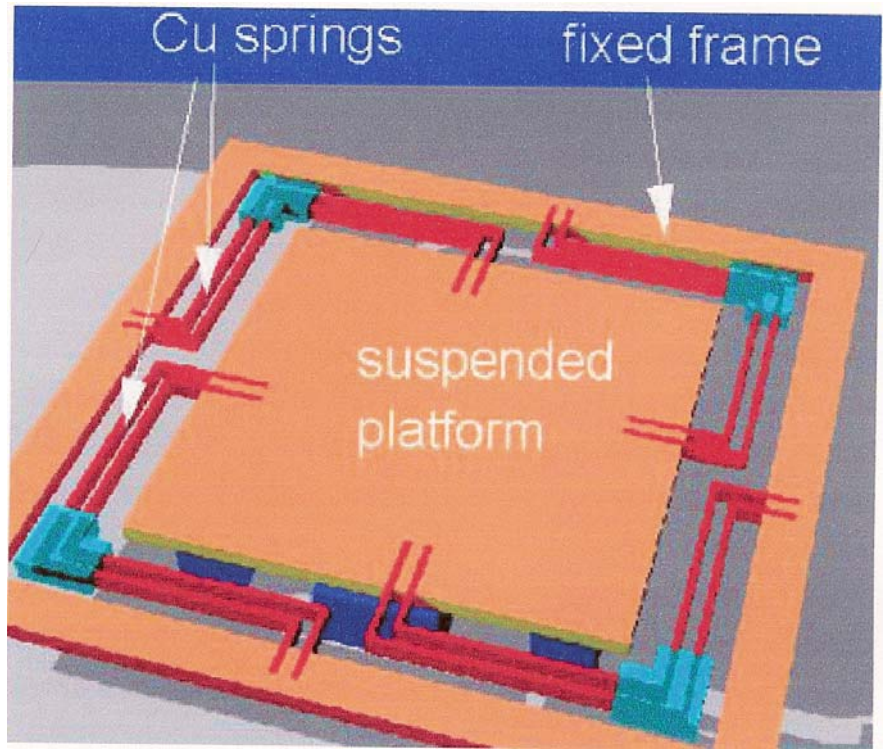

IBM "millipede": integrated scanner with **Cu spring-strips** with nm positioning

“State-of-the-art” **flexures-based** positioners: generally PZT actuated with capacitive sensors, travel ranges of several 100 nm, resolution in the range of a (sub)nm, loads of a few 10 (100) g, resonant frequencies in the kHz region; e.g. PI NanoPositioners, piezosystem jena, Melles Griot “Advanced Positioning Technology”, …

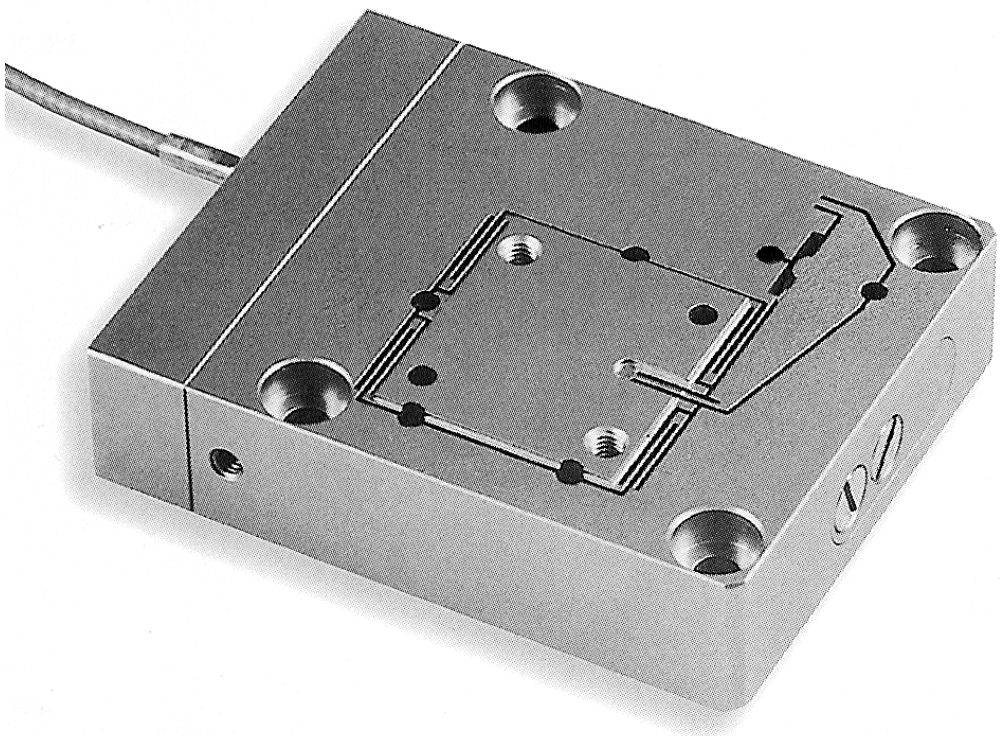

P-780 Flexure NanoPositioner

[PI catalogue]

3D CMM – coordinate measuring machines' probe manipulators with nm resolutions and precisions **based on spring-strips or flexural hinges**

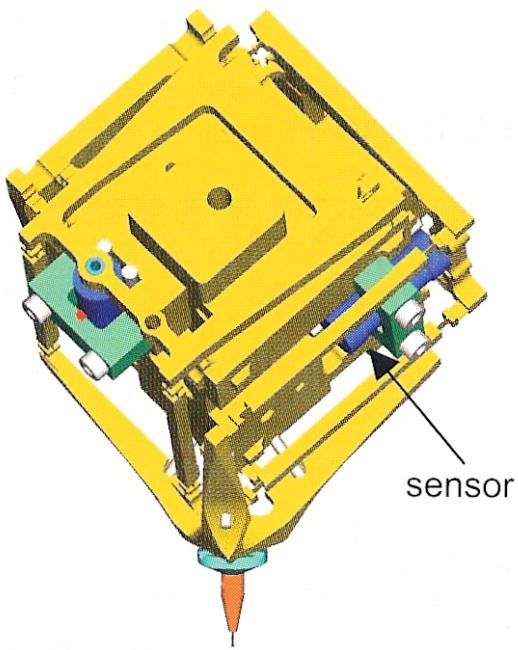

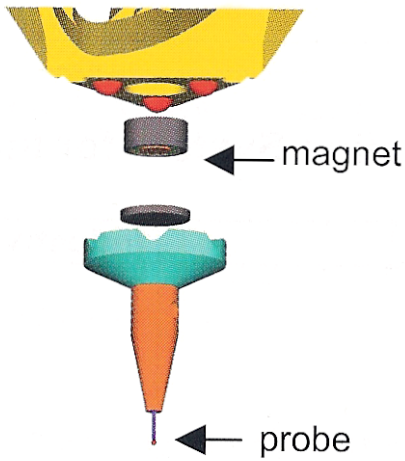

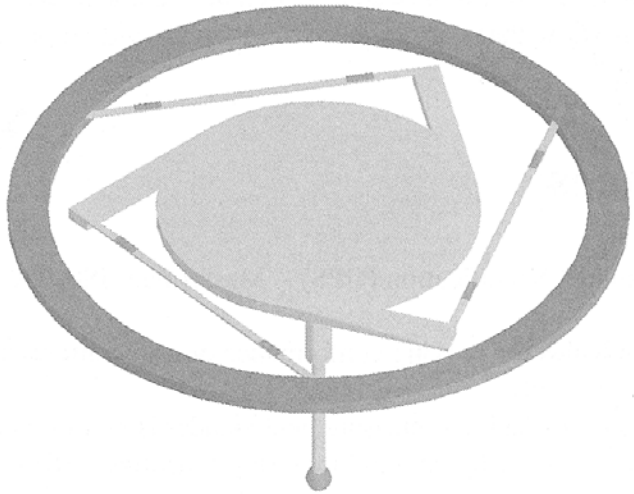

[Haitjema et al., Int. Sem. Prec. Eng. & Micro-Techn., 2000]

Working range = ± 0.5 mm, resolution = 5 nm, repeatability = 20 nm, t_{notch} = 60 µm, $m_{movable}$ = 7 g

[Meli et al., Top Nano 21, 2003]

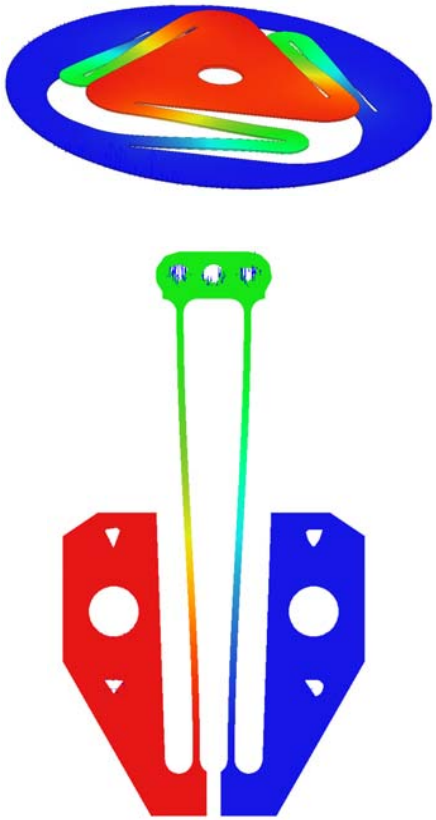

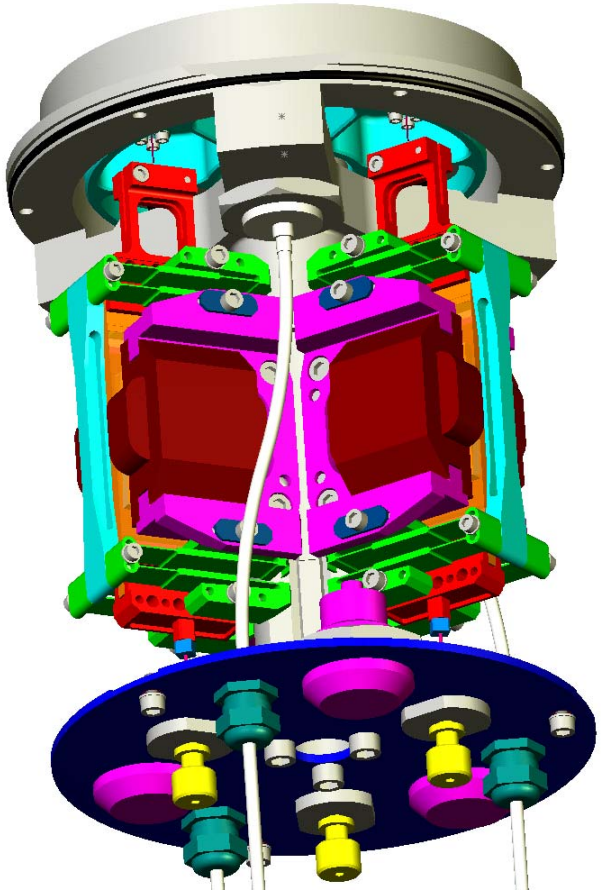

[Henein + ZS, Nanobeam, 2002]

View-field selector of the Nasmyth Adaptive Optics System (NAOS) @ Very Large Telescope (VLT) in Paranal, Chile: actuators are guided by **spring-strips translation devices**; a **flexible membrane** blocks the unwanted DOFs, $\phi_{mirror} = 85$ mm tilt: ± 6°, angular resolution: 0.62” (~ 3 μrad)

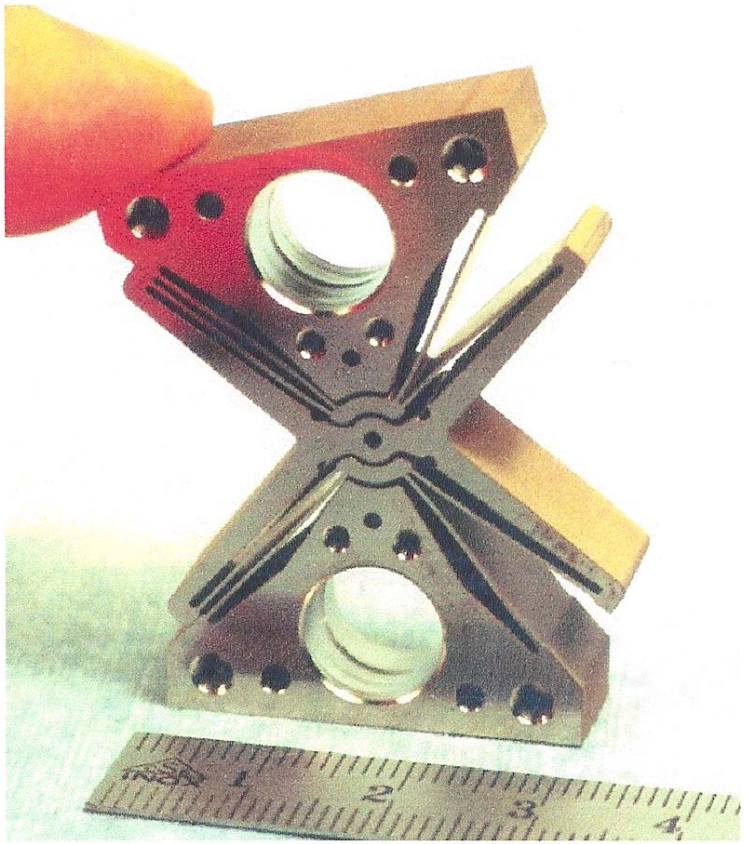

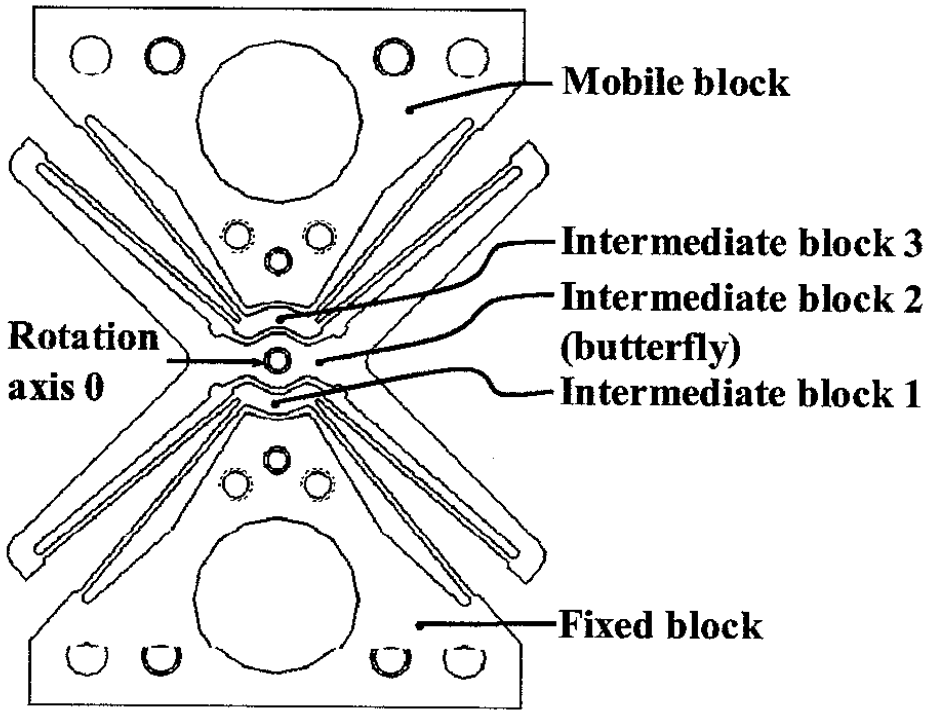

Compensated rotation mechanism based on spring-strips for a scanning device for space instrumentation (inter-satellites communication systems): parasitic deflections < 2 μm for a ± 10° rotation (65 x smaller than by standard cross-spring pivots) with a 50 μrad resolution

[Henein et al., Eur. Space Mech. & Tribol. Symp., 2003]

MIT HexFlex: 6DOF monolithic compliant (**spring-strips & flexural hinges**) nano-manipulator in Al with magnet-coil or piezo actuators and capacitance sensors for e.g. positioning of biological, photonic, optical, MEMS, … components; planar nature → improved dynamic response; symmetric → good thermal stability; alteration of transmission ratios by changing geometry and/or compliance; cost of HW: 2000 U$D

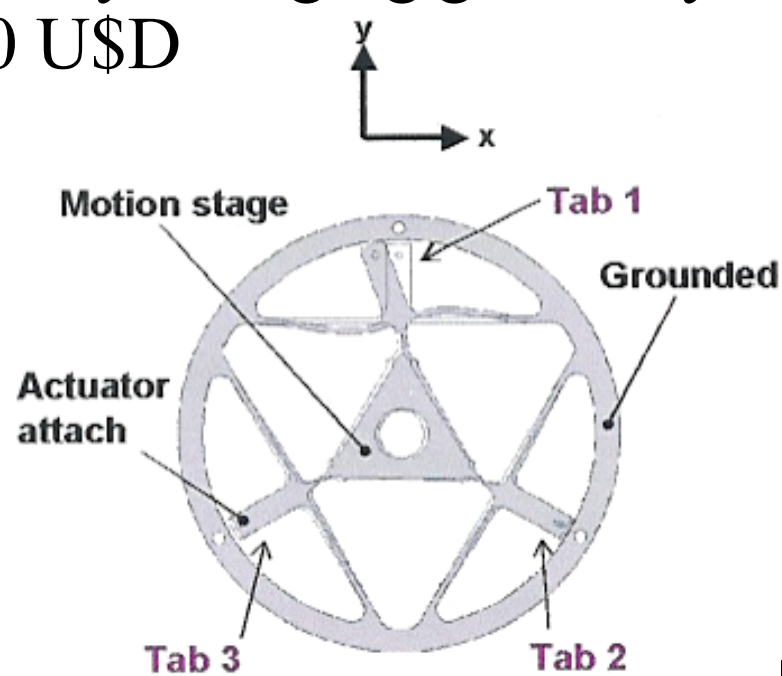

A: HexFlex geometry

[Culpepper + Anderson, to appear in Prec. Eng.]

Manipulation of the tabs changes the position of the ‘stage’ in the center; working range: 100 $nm^3 \div 100\ \mu m^3$, resolution: < 5 nm, open loop accuracy: 150 (5) nm, parasitic motion: 0.005% (nano) ÷ 0.2% (micro) FS

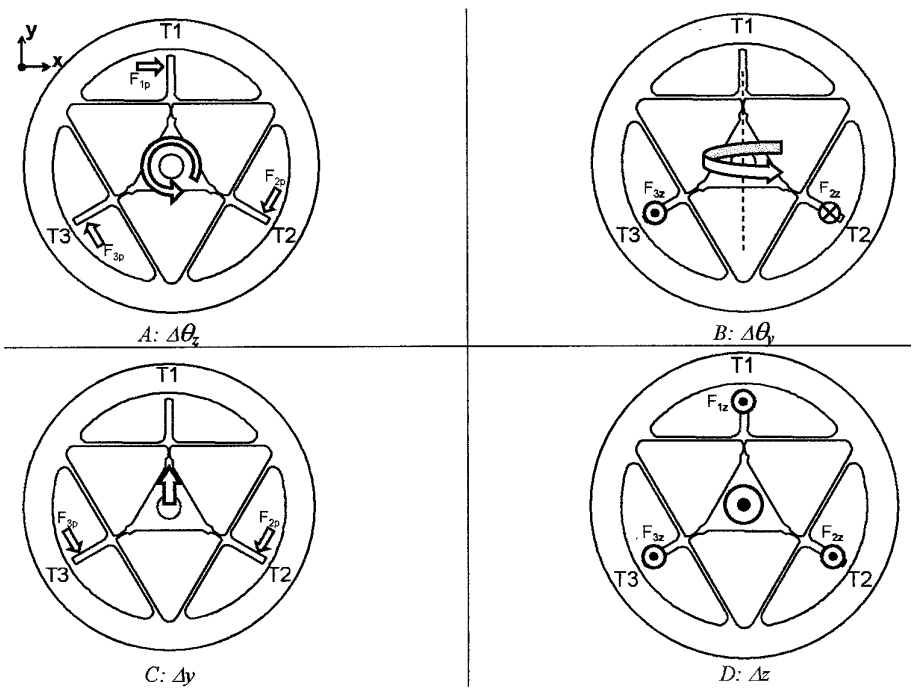

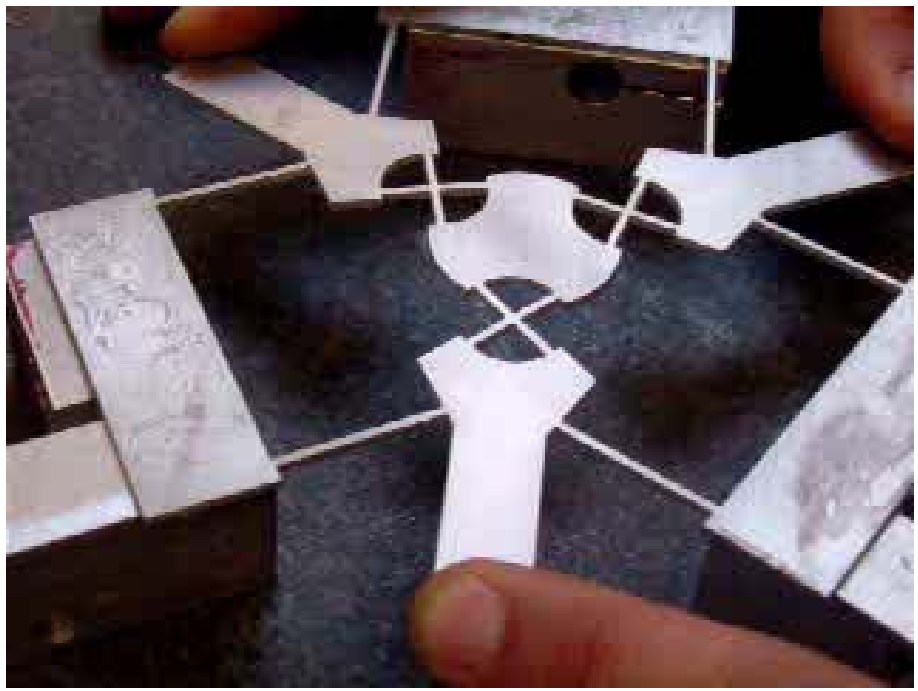

[Culpepper + Anderson, to appear in Prec. Eng.]

3D tip positioning @ STMs: piezo bimorph frame for the movements in the XY plane + Z movement via 2 segmented bimorph plates → all based on **parallel spring translators**; capacitive measurement of the tip position ⇒ tilt errors < 50 µrad

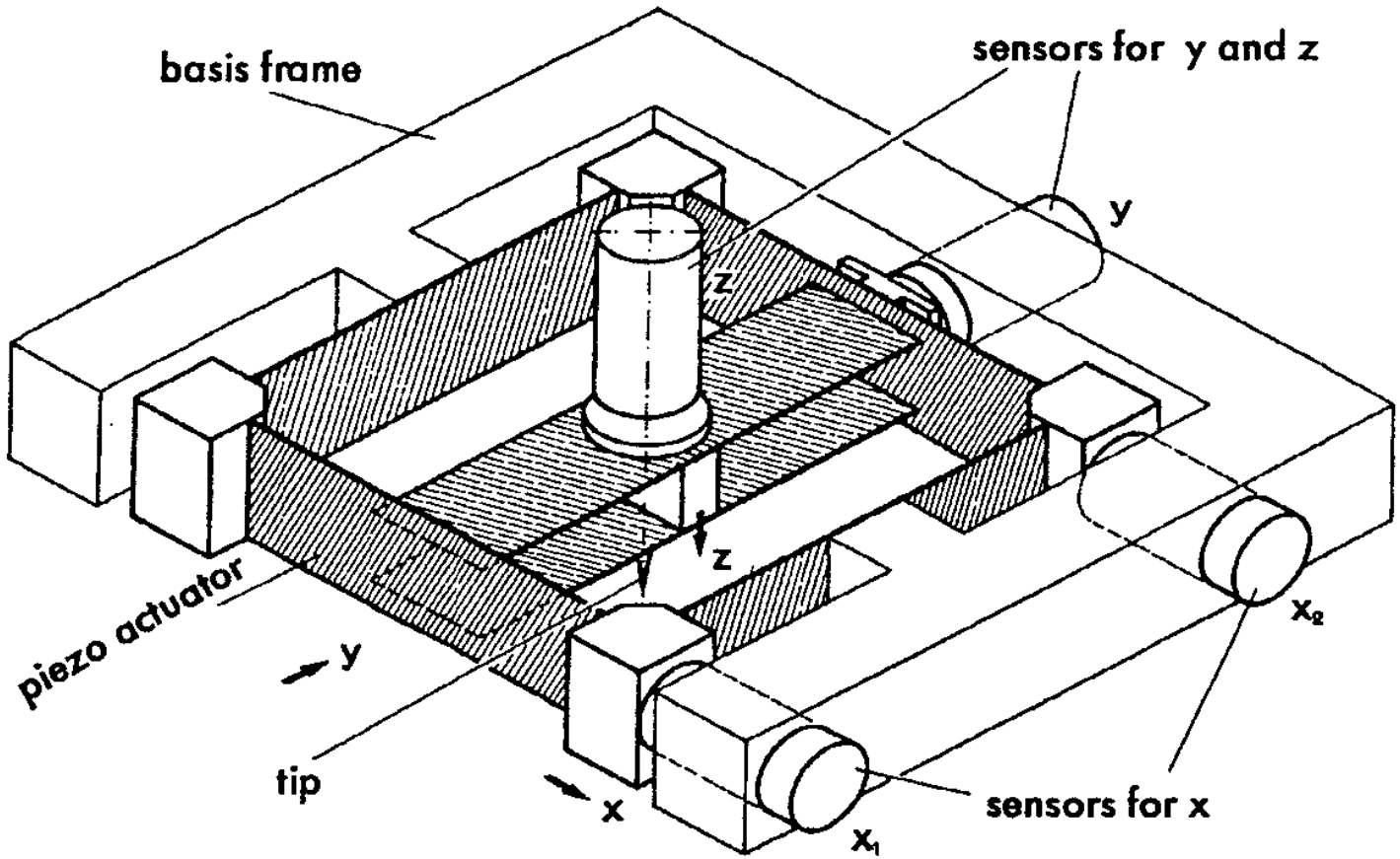

[Zhao, Int. Progress Prec. Eng., 1993]

[Ashida et al., MST News, 2003]

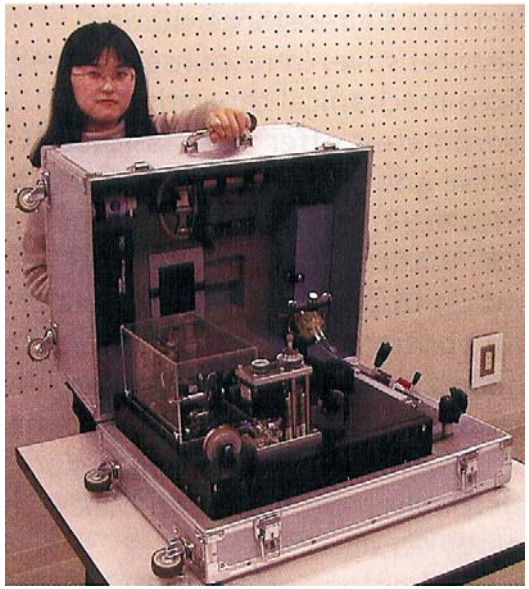

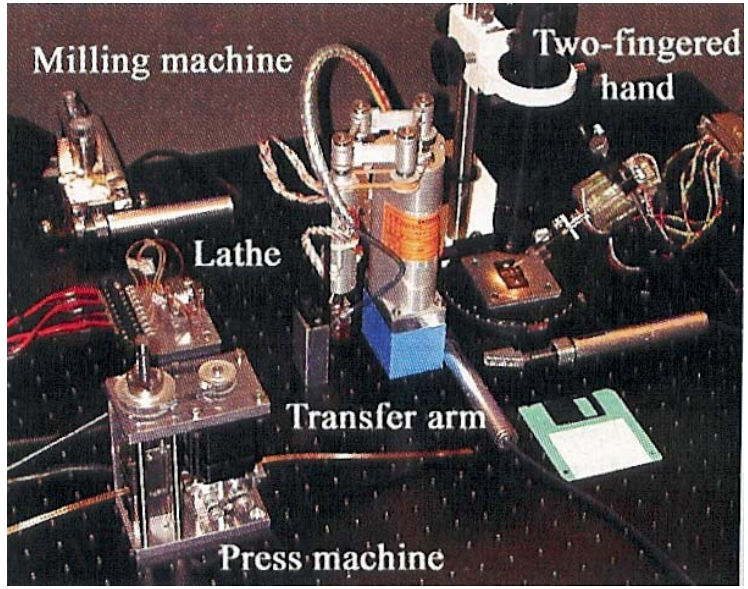

'Desktop' factory (70 x 50 x 40 cm, 34 kg)

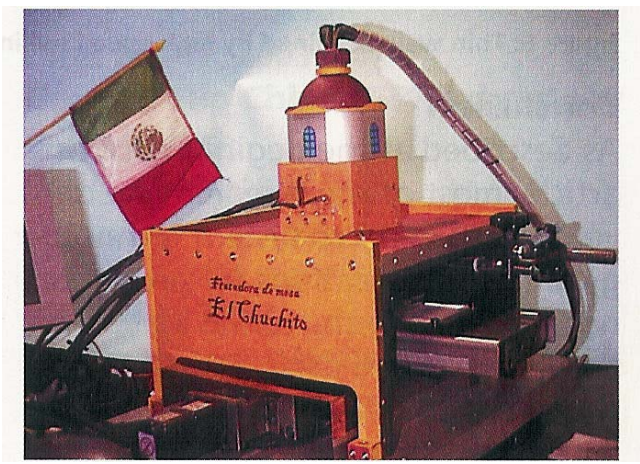

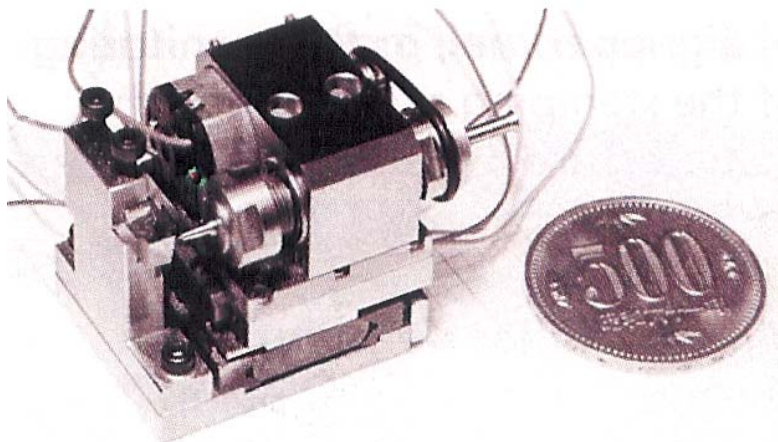

Micro NC high-speed milling mach.;
$2 \cdot 10^5$ rpm, 60 x 100 x 30 mm travel

Micro lath;
30 x 30 x 30 mm, 100 g

Nanofacory: 6 DOFs mechanisms with nm & nrad resolutions and repeatabilities based on **flexural hinges**, working range of 1 ÷ 2 cm^3 with a volume of the machine of a couple of dm^3 (~ 150 x 150 x 250 mm), usage: e.g. micro EDM machines

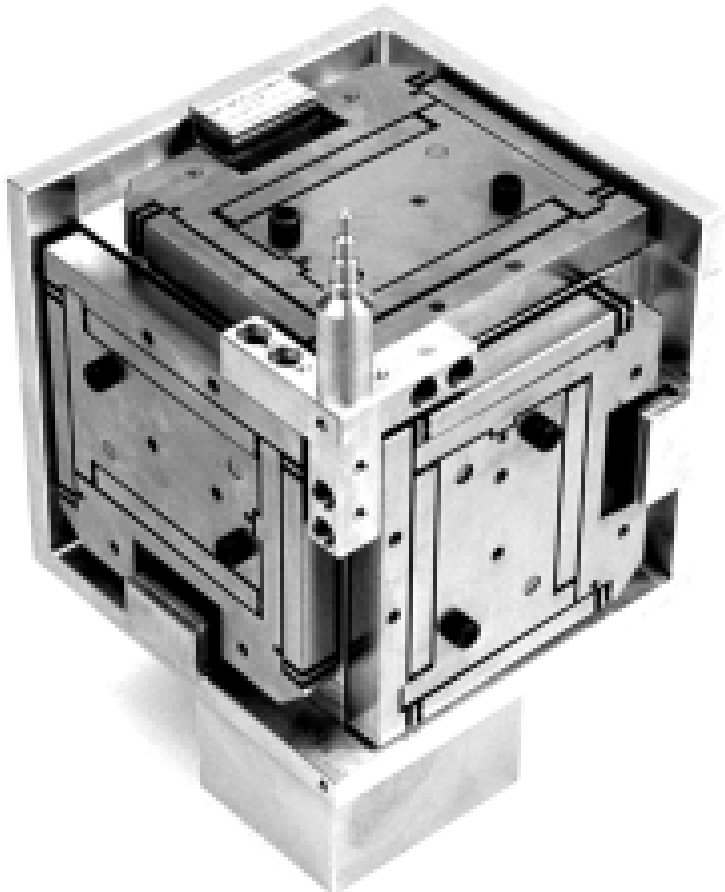

[Clavel et al., Top Nano 21, 2003]

CONCLUSIONS

One of the key mechanical engineering issues in designing SR instrumentation, but also in micro- and nano-technologies is precision positioning

Flexures, given their marked advantages, make possible the design of a new generation of high- and ultra-high-precision mechanisms

The analysis of the non-linear parasitic deflections of compliant mechanisms based on spring-strips can be addressed with analytical approaches of different degrees of approximation

Employment of laser interferometry allows the experimental validation of the behavior of such devices and thus the optimization of their design

For flexural hinges, the problem reduces to the minimization of stress concentrations via the optimization of the notch shape → the design solution will depend on the acceptable parasitic displacements for a given stress

Realized applications have typical positioning resolutions in the range of 1 Å ÷ 1 μm (respectively 20 nrad ÷ 10 μrad), amplitudes of 100 μm ÷ 50 mm (respectively 1 mrad ÷ several deg) and working bandwidths of 1 Hz ÷ 1 kHz

Mastering the design of complex compliant structures, as well as the interactions between the mechanical structure, the actuators, the sensors, the electronics and the control algorithms, allows to benefit from the proposed compliant mechanisms approach in the design of accelerator equipment and instrumentation

Cornell NANOGUITARs

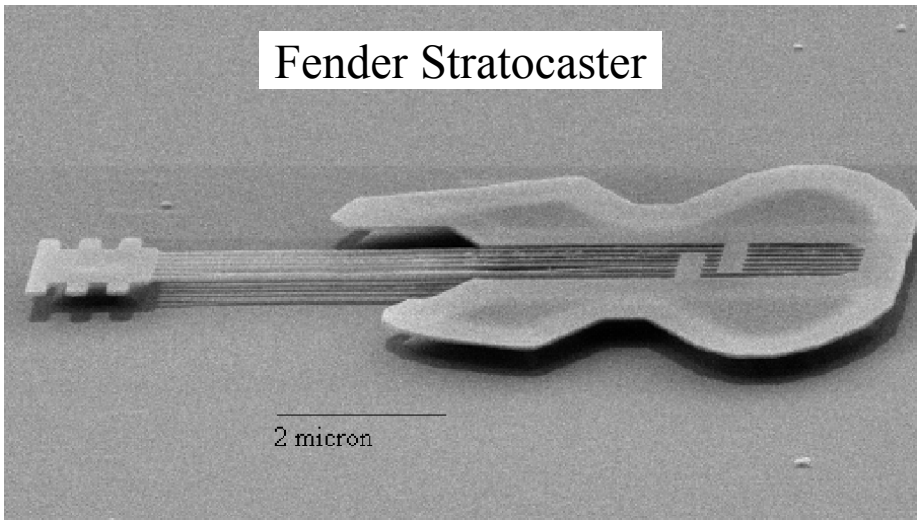

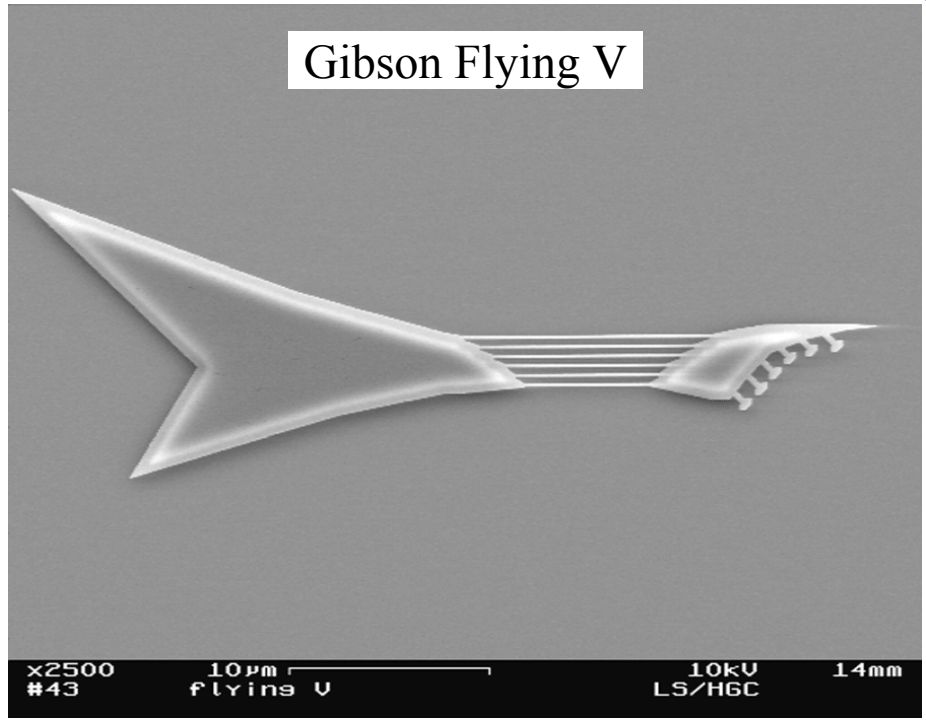

Strings: silicon flexible 150 nm thick bars played by hitting them with laser light and ‘heard’ via interference

THANK YOU FOR YOUR ATTENTION!

Questions?