OPTOMECHANICS: TECHNIQUES FOR PRECISION MOTION IN OPTICAL SYSTEMS

By Malcolm R. Howells

Advanced Light Source

Lawrence Berkeley National Laboratory

Berkeley CA 94720 USA

ADVANTAGES AND DISADVANTAGES OF FLEXURES

[Smith and Chetwynd 1992]

ADVANTAGES

- Wear-free
- Can be monolithic eliminating instabilities associated with interfaces made by clamps, screws, welds or adhesives
- Displacements are smooth and continuous (no stick-slip)
- Possibilities for athermal designs
- Can be predictable and linear even, in some cases, in the presence of errors

DISADVANTAGES

- Vulnerable to hysteresis in some materials
- Restricted to small displacements and angular rotations
- Stiffness tends to be too high in directions of intended motion and not high enough in out-of-plane directions
- The need for flexibility militates against high load capability
- Vulnerable to breakage or damage by overloads

COMPARISON OF FLEXURAL HINGES

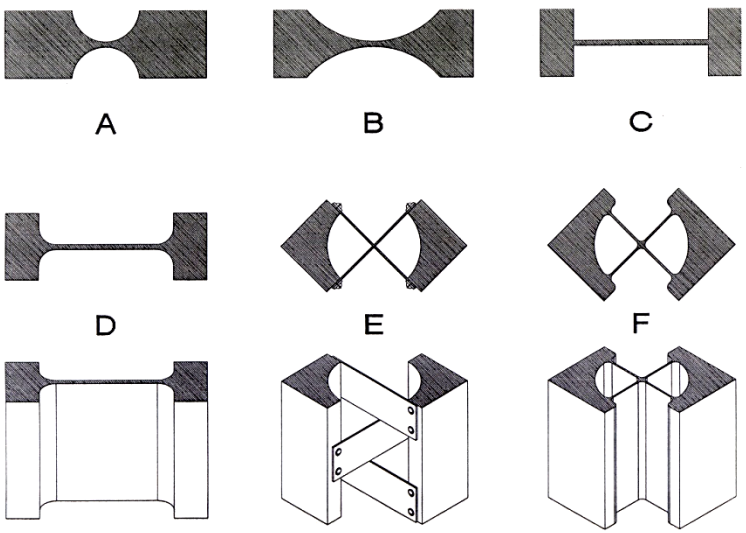

A. Notch hinge - good for stiffness, accuracy of center and ease of fab, bad for stress concentration angular range and heavy loads

B. Notch hinge with the above bad points improved at the expense of the good ones

C. Flat strip hinge: good for ease of fab, stress concentration and angular range, bad for stiffness, accuracy of center and load carrying

D. Combined notch and strip hinge: another compromise between A and C

E. Crossed-strip hinge: available commercially, addresses all the bad points of C but is bulky and cannot be cut by EDM and thereby integrated into monolithic designs

F. Monolithic crossed-strip hinge or cartwheel hinge: similar to E but *can* be cut by EDM, less center shift and even better for load carrying - disadvantages; higher stress and lower angular range

ANALYSIS OF A "NOTCH HINGE"

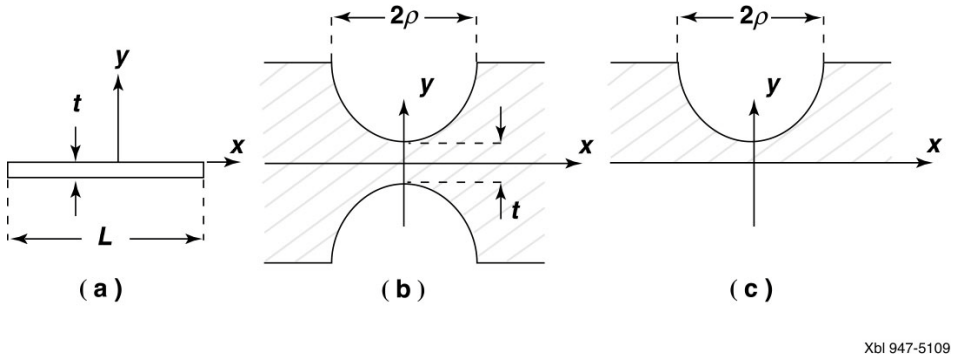

[Howells 1995]
We start with the Bernoulli-Euler equation even though it appears to be invalid

$$E\,I(x)\frac{d^2y}{dx^2} = M$$

For a "notch" hinge loaded by a pure couple we use $I(x)=bh^3/12$

$$\frac{d^2y}{dx^2} = \frac{12C}{bE}\frac{1}{\left[2\left(\rho-\sqrt{\rho^2-x^2}\right)+t\right]^3}.$$

With the boundary condition $(dy/dx)_{x=-\rho} = 0$ this can be integrated using a standard form to give the couple per unit angle

$$T_{hinge} = \frac{C}{\left(\frac{dy}{dx}\right)_{x=\rho}} = \frac{bEQ^2}{12\rho\left\{\frac{1}{a}+\frac{1}{Q^2}\left[a+\frac{8\rho^2}{a}+\frac{12a\rho}{Q}\tan^{-1}\left(\frac{Q}{t}\right)\right]\right\}}$$

where $a = 2\rho + t$ and $Q^2 = 4\rho t + t^2$

Considering the limit $\rho >> t$, we find that the arctan term is dominant and

$$T_{hinge} = \frac{2Ebt^{5/2}}{9\pi\sqrt{\rho}}$$

[Paros and Weisbord 1965]

SIMPLE CONCLUSION

For a uniform rectangular beam of the same material, identical length, 2ρ, width, b, thickness, t, and similar loading, the couple per unit angle is

$$T_{beam} = \frac{Ebt^3}{24\rho}$$

so that T_{hinge} can be expressed as a function of a single variable η

$$\Gamma(\eta) = \frac{T_{hinge}}{T_{beam}} = \frac{2f^2}{\frac{1}{g} + \frac{1}{f^2}\left(g + \frac{8\eta^2}{g} + \frac{12g\eta}{f}\tan^{-1} f\right)}$$

where $\eta = \rho/t$, $f = \sqrt{4\eta + 1}$ and $g = 2\eta + 1$

Again considering the limit $\rho >> t$, the Paros-and-Weisbord approximation gives

$$\Gamma(\eta) \cong \frac{16}{3\pi}\sqrt{\eta}$$

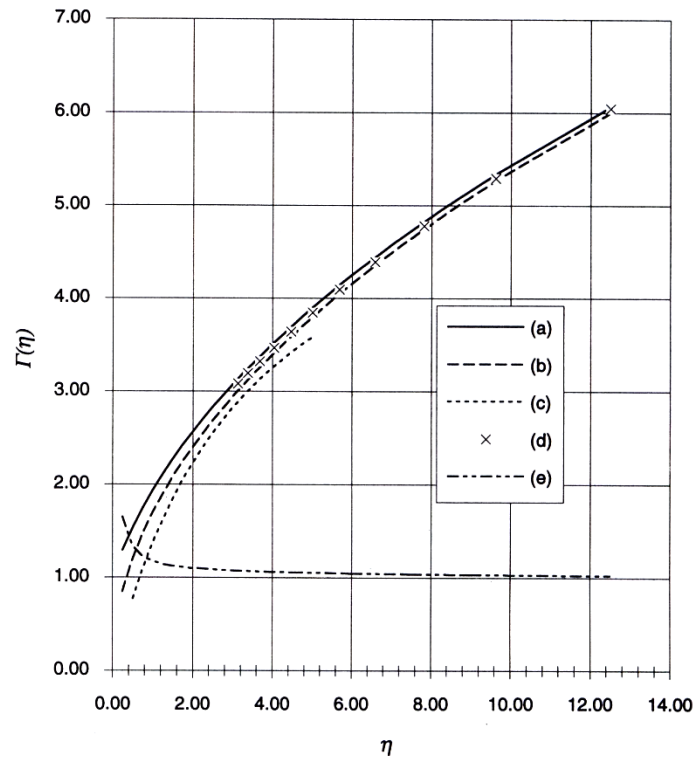

The couple per unit angle of a double-sided notch hinge in ratio to that of a flat-beam hinge of the same parameters according to various forms of calculation. (a) full formula, (b) Paros-and-Weisbord approximate formula, (c) Smith and Chetwynd finite element fit, (d) (crosses) finite element calculations by Andresen (LBNL), (e) stress concentration factors (from Roark)

SIMPLE CONCLUSION

$$T_{hinge} \cong 1.70\sqrt{\eta}\,T_{beam}$$

Both the exact and the approximate formula agree well with FEA and are good for most design purposes in spite of being outside the normal range of applicability of beam theory

GENERALIZATIONS

Design Formulas for notch-type hinges

Element shape	Couple per unit angle	Maximum stress
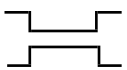	$T_{beam} = \frac{Ebt^3}{24\rho}$	$\sigma_{beam} = \frac{Et\theta}{4\rho}$
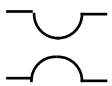	$\Gamma(\eta)\ T_{beam}$	$\Gamma(\eta)\ \sigma_{beam}$
	$\frac{\Gamma(2\eta)}{8} T_{beam}$	$\frac{\Gamma(2\eta)}{8} \sigma_{beam}$
	$2\Gamma(\eta)\ T_{beam}$	$2\Gamma(\eta)\ \sigma_{beam}$
	$\frac{\Gamma(2\eta)}{4} T_{beam}$	$\frac{\Gamma(2\eta)}{4} \sigma_{beam}$

All the elements are taken to be of full length 2ρ, width b, and full center thickness t except that the quarter-circle ones (which are formed by cutting the semicircle ones in half) have length ρ. $\Gamma(\eta)$ is given by equation (20) or (21) where $\eta=\rho/t$.

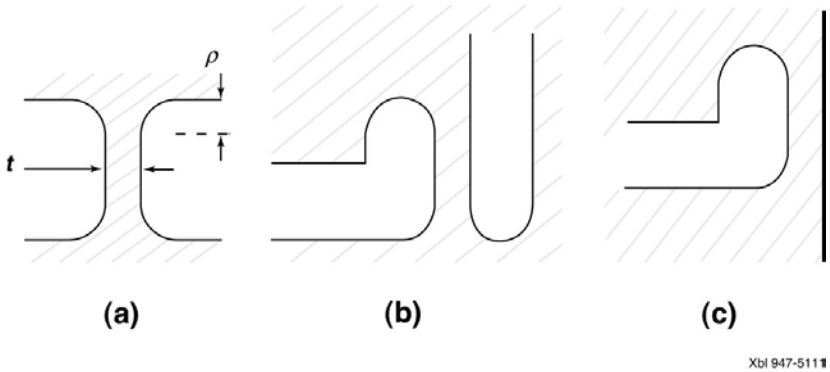

Combined notch and flat-beam style hinges:

- Can be made by EDM
- Compromise of stress concentration and flexibility versus goodness of rotation center
- Hinges joined end-to-end have a combined couple per unit angle equal to the harmonic mean of the individual ones

$$\frac{1}{T_{total}} = \frac{1}{T_1} + \frac{1}{T_2} + \mathrm{K}$$

OPTICAL APPLICATIONS

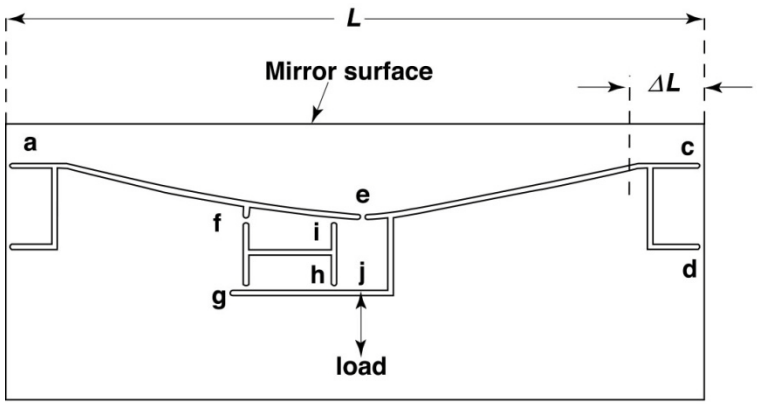

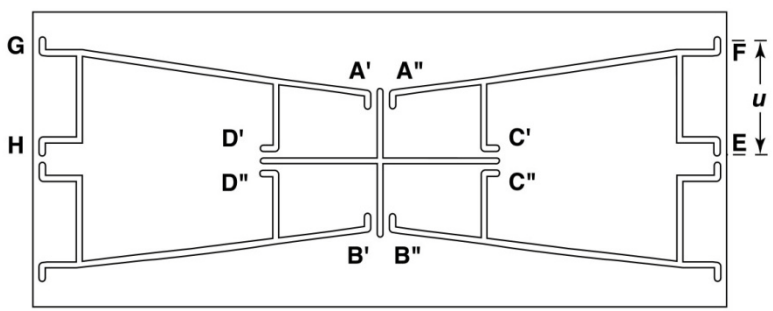

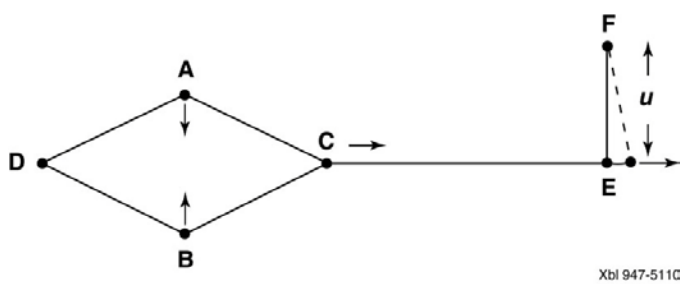

[Howells et al 1993, 1995]

- Top diagram: circular cylinder mirror of a type still used at ALS
- Usually made of Glidcop and cut by EDM
- The variation of thickness with position can follow a cubic relationship which leads to a circular bend the radius of which can be tuned by varying the load (the end part (ΔL) follows a different curve and is not part of the mirror)
- The cut of the thickness function can be programmed to provide an elliptical bend
- The rectangle linkage fghi constrains the member ej to move without rotation when driven
- The link eif constrains the mirror not move sideways when driven
- Hinges ad and cd relieve thermal stresses if the mirror should become hotter than the base
- Disadvantage: the hinges at a, c and e rotate when the mirror is bent and their couples per unit angle add erroneous bends to the mirror
- Solution: the flexure below bends the mirror without any rotation of the hinges that connect to the mirror
- When the points A and B are driven toward each other the end members EF and GH are rotated by the right amount so that the hinges at F and G undergo no rotation provided that AB/DC=8u/L

MYSTERY FLEXURE

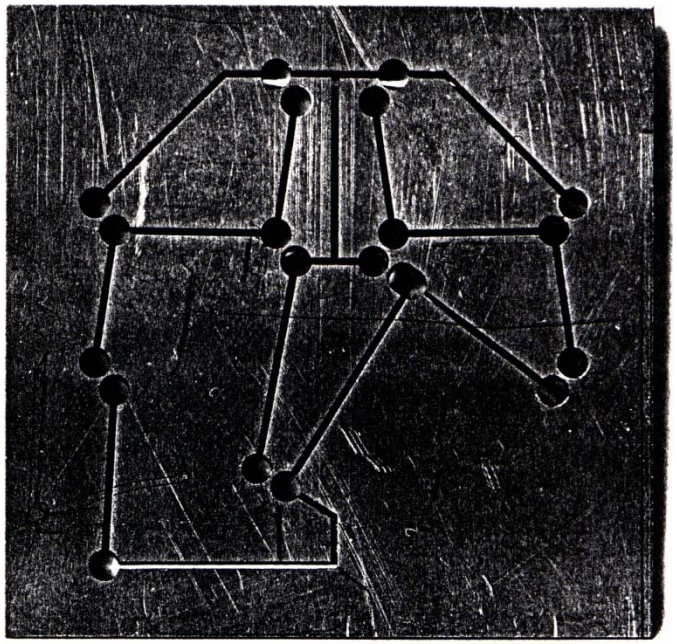

What does it do and how do you drive it?

LUCAS COMMERCIALLY-MADE CROSSED-STRIP HINGES

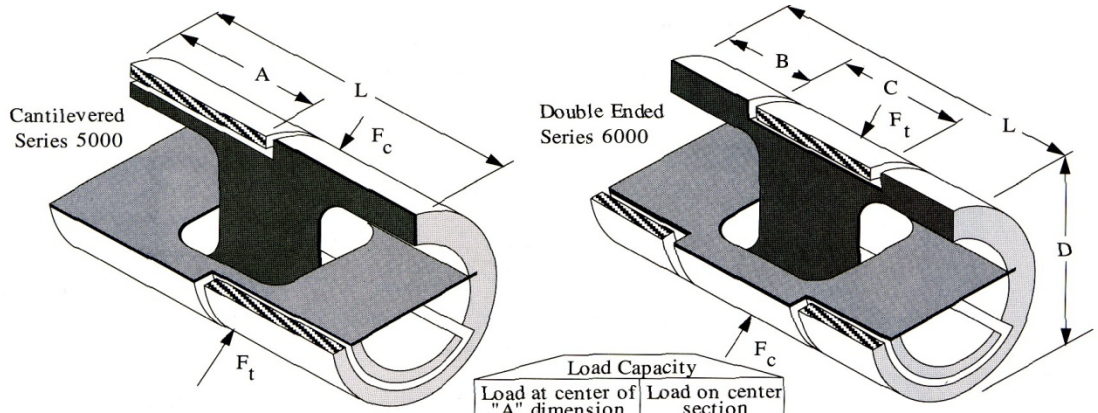

Load Capacity	
Load at center of "A" dimension Series 5000	Load on center section Series 6000

Nominal outer diameter (inch)	Cantilevered Series 5000 (Size-Type)	Double-Ended Series 6000 (Size-Type)	K_θ (lbf-in/rad)	Fc (lbf)	Ft (lbf)	Fc (lbf)	Ft (lbf)	D (in.)	L (in.)	A (in.)	B (in.)	C (in.)
1/8	5004-400	6004-400	0.800	25.00	25.0	28.0	28.0	0.1250	0.200	0.095	0.045	0.085
	5004-600	6004-600	0.100	8.80	12.5	17.7	25.0					
	5004-800	6004-800	0.011	0.88	3.5	2.2	4.7					
5/32	5005-400	6005-400	1.600	39.00	39.0	44.0	44.0	0.1562	0.250	0.120	0.057	0.110
	5005-600	6005-600	0.200	13.80	19.5	27.6	39.0					
	5005-800	6005-800	0.025	1.39	5.5	3.5	7.4					
3/16	5006-400	6006-400	2.710	56.0	56.0	63.0	63.0	0.1875	0.300	0.142	0.067	0.130
	5006-600	6006-600	0.326	19.8	28.0	39.6	56.0					
	5006-800	6006-800	0.041	2.1	6.8	4.9	9.0					
1/4	5008-400	6008-400	6.540	100.0	100.0	113.0	113.0	0.2500	0.400	0.190	0.090	0.175
	5008-600	6008-600	0.817	35.4	50.0	70.7	100.0					
	5008-800	6008-800	0.102	3.4	14.0	8.5	19.0					
5/16	5010-400	6010-400	12.800	156.0	156.0	176.0	176.0	0.3125	0.500	0.238	0.112	0.220
	5010-600	6010-600	1.640	55.0	78.0	110.0	156.0					
	5010-800	6010-800	0.204	5.7	21.9	14.0	29.0					
3/8	5012-400	6012-400	22.000	225.0	225.0	253.0	253.0	0.3750	0.600	0.285	0.135	0.265
	5012-600	6012-600	2.750	80.0	113.0	159.0	225.0					
	5012-800	6012-800	0.331	7.9	31.5	19.8	42.0					
1/2	5016-400	6016-400	52.000	400.0	400.0	450.0	450.0	0.5000	0.800	0.380	0.180	0.355
	5016-600	6016-800	6.500	141.0	200.0	283.0	400.0					
	5016-800	6016-800	0.813	14.2	56.3	35.4	75.0					
5/8	5020-400	6020-400	106.00	625.0	625.0	703.0	703.0	0.6250	1.000	0.475	0.225	0.445
	5020-600	6020-600	13.30	221.0	312.0	442.0	625.0					
	5020-800	6020-800	1.69	22.1	87.8	55.0	117.0					
3/4	5024-400	6024-400	182.00	900.0	900.0	1013	1013	0.7500	1.200	0.570	0.270	0.535
	5024-600	6024-600	22.80	318.0	450.0	636	900					
	5024-800	6024-800	2.85	31.1	127.0	78	169					
1	5032-400	6032-400	431.00	1600	1600	1800	1800	1.0000	1.600	0.770	0.370	0.735
	5032-600	6032-600	53.80	566.0	800	1131	1600					
	5032-800	6032-800	6.73	56.6	225	141	300					

ANALYSIS OF THE CARTWHEEL HINGE

We treat the spokes as beams fixed at 90° relative to the rims and each other. When one rim is rotated by angle Δ, each spoke must assume the same shape and the center hub must rotate by $\Delta/2$ (by symmetry). The point B moves to C and other spoke delivers a point load at O.

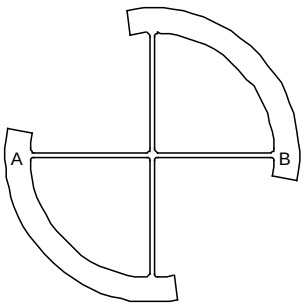

BEAM THEORY CALCULATION

Let OE and OF be the x and y axes - then for a single spoke of length ρ,

$$EI\frac{d^2y}{dx^2} = M(x) = F(q-x) - C$$

where E is the modulus, I the section moment, M the bending moment and C is the couple and F the azimuthal force exerted on each beam by the rim. Integrating twice and applying boundary conditions $y = dy/dx = 0$ at $x = 0$ we get

$$EI\frac{dy}{dx} = Fqx - Fx^2/2 - Cx \qquad \text{and} \qquad EIy = Fqx^2/2 - Fx^3/6 - Cx^2/2$$

F and C are dependant elastic properties of the beam (statically indeterminate) but can be found from the boundary conditions at $x=q$ which are $y = \rho\sin(\Delta/2)$, $dy/dx = \Delta/2$. Setting $x=q$ in and solving the above equations for F and C we obtain

$$F \cong \frac{3EI\Delta}{\rho^2} \qquad \text{and} \qquad C \cong \frac{EI\Delta}{\rho}$$

which are the values applying to a single spoke with angular displacement $\Delta/2$ relative to the x axis. Using these values of F and C, we find that

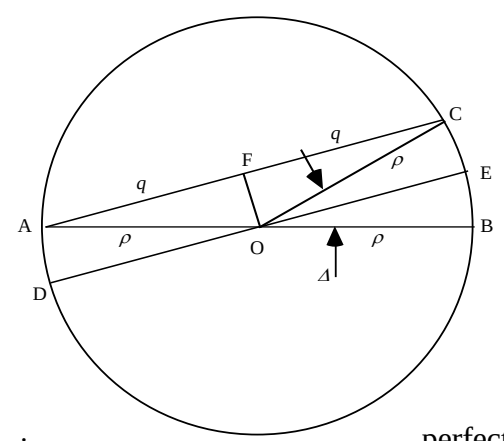

- for small Δ the shape of the spoke is given by

$$y = \frac{\Delta}{q^2}\left(qx^2 - \frac{x^3}{2}\right)$$

- the maximum curvature, which occurs at $x=0$, is $2\Delta/\rho$,
- the maximum-stress (also at $x=0$) is $Mt/2I$, which is $E\Delta t$
- the bending moment (and hence the curvature and stress) of the cartwheel spokes are zero at $x=2\rho/3$ where there is a point of inflexion
- Not finding a treatment of this problem in the literature we have verified the above results independently by strain-energy methods

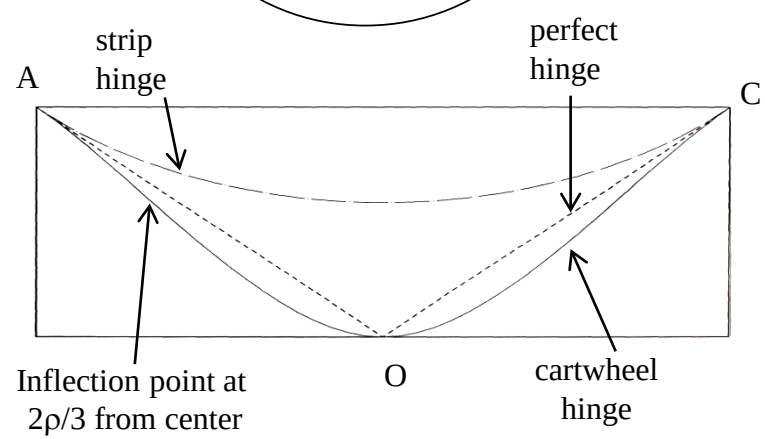

CARTWHEEL FLEXURE: DESIGN DETAILS

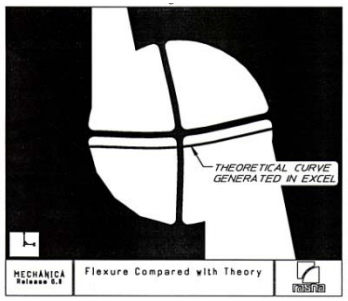

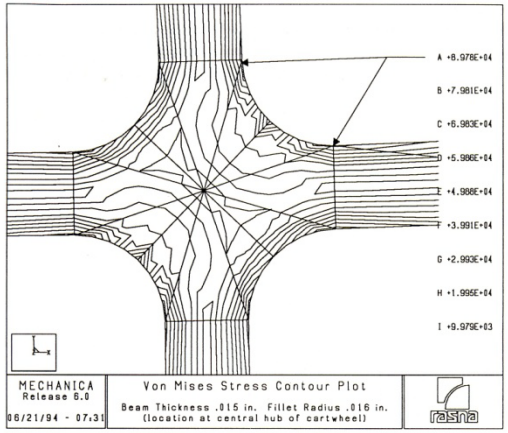

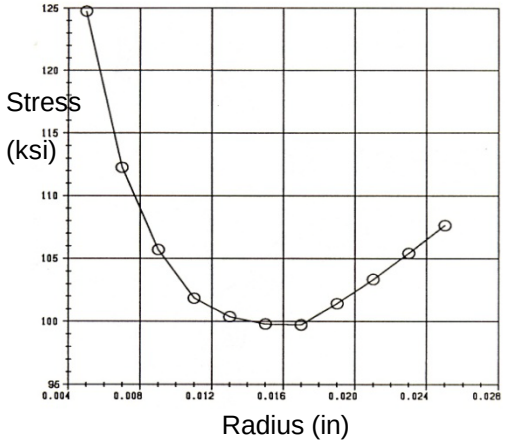

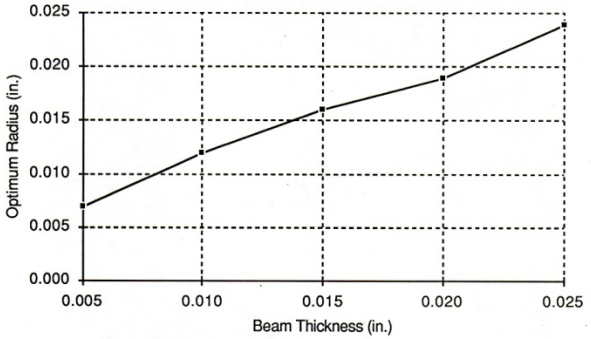

COMMENTS

- The Rasna model photograph and beam theory calculation match well
- The maximum stress concentration (not given by beam theory) is at the arrowed position
- The optimum value for the radii at the hub roughly equal to the beam thickness

MEASUREMENT OF PARAMETERS

Prototype tool steel cartwheel flexures

Quantity	Units	Value
Diameter	in	0.5
Depth	in	2.0
Nominal wall thickness	in	0.01
Material		S7 tool steel
Yield stress after hardening	lb/in^2	350,000
Elastic modulus	lb/in^2	29.5×10^6
Maximum stress at 0.1 radian	lb/in^2	118,000*
Center shift at 0.1 radian	in	0.00012*
Maximum curvature	in^{-1}	0.2*

*values calculated from the foregoing theory

MEASUREMENTS:

- The couple per unit angle was measured as a function of wall thickness which tends to be larger at the center - the agreement with calculation was within 40%
- The center shift was measured and agreement with calculation was within 15%

FATIGUE PROPERTIES OF CANDIDATE FLEXURE MATERIALS

Class of material	Tool steel	Alloy steel	Maraging steel (Vascomax)	Aluminum
Type	S7	4340	C-300	7075
Tempering temperature (°F)	1000	200	900	
Temper designation				T651
Tensile strength (ksi)	264	287	294	77
0.2% Yield strength	200	270	287	67
Elongation (%)	10	11	10	6
Reduction in area (%)	33	39	47	12.7
Elastic modulus (Msi)	30	29	27.5	10.3
Strain range(10^5) universal slopes	0.008314	0.009356	0.010160	0.006874
Strain range(10^7) universal slopes	0.004488	0.005048	0.005457	0.003801
Fatigue endurance limit (ksi)		140	125	23

- For our major project we started with prototypes of S7 tool steel (left) but we ended up using maraging steel for our main flexure
- Some of these materials need to be specially made if large sizes are required
- Note that for flexures the requirement is for a given strain (=(allowed stress)/(modulus)) so aluminum alloys may be surprisingly competitive due to their low modulus
- The fatigue endurance limit is the stress level at which an unlimited number of stress reversals can be tolerated - not all materials have one

FATIGUE-TESTING OF CARTWHEEL HINGES

ITEM	UNITS	HINGE1	HINGE2	HINGE3	HINGE4	HINGE5	HINGE6	HINGE7
Date started		3-25-94	4-1-94	7-14-95	9-12-94	10-12-94	2-16-95	
Notes						accident		honed
Material		Tool steel S7	Tool steel S7	Maraging steel 300C*	Maraging steel 300C*	Maraging steel 300C*	Maraging steel 300C*	Maraging steel 300C*
Overall dia	in	0.5	0.5	0.5	0.5	0.7	0.7	0.7
Heat treatment		to 350 ksi	to 350 ksi	Age**	Age	Age	Age	Age
Bake out***		No	No	No	Yes	Yes	Yes	Yes
Roth alf angle	radian	6	3	3	±2°25'	+3, -2°55'	±3.00	±3.00
Strain	%	1.9	0.74	0.74	0.58	0.74	0.74	0.74
Stress max	ksi	149	61	104	104	78	78	71
Wall thickness	in	0.011	0.009	0.015	0.019	0.015	0.015	0.012
Wall depth	in	2	2	2	2	2	2	2
Cycles to failure		1100	intact after 470,000	233,000	275,000	256,000	290,000	

* Vascomax 300 CVM (18% Nickel alloy steel, tensile strength 300 ksi)

** 24 hrs at 150 °C

*** 3-6 hours at 480 °C

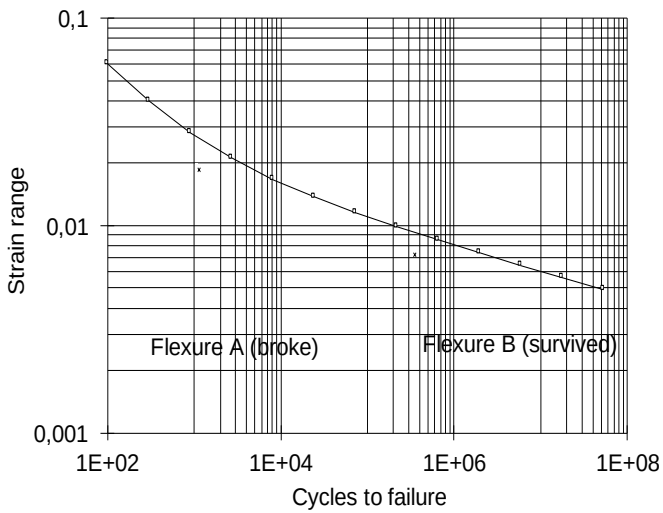

For flexures, it is the *strain* which is prescribed so we choose the following form of the fatigue curve of the material based on the "method of universal slopes" [Manson 1965].

$$\Delta\varepsilon = 3.5\frac{\sigma_u}{E}\left(N_f\right)^{-0.12} + \left[\ln\left(\frac{1}{1-RA}\right)\right]^{0.6}\left(N_f\right)^{-0.6}$$

where

$\Delta\varepsilon$= the strain range (the strain *change* from maximum compression to maximum extension)

σ_u=the ultimate tensile strength (lb/in^2)

RA=reduction in area at failure

N_f=number of cycles to failure

The first term represents elastic strain and the second one plastic strain. Setting σ_u=350000 lb/in^2, RA=0.33 for tool steel S7

Alloy DIGEST

VASCOMAX 300 CVM

Filing Code: SA-135
Steel-Alloy

OCTOBER 1962

DATA ON WORLD WIDE METALS AND ALLOYS

Published by
Engineering Alloys Digest, Inc.
Upper Montclair, New Jersey

VASCOMAX 300 CVM

(CVM Ultra-High Strength Steel)

VascoMax 300 CVM is an 18% nickel alloy steel having superior toughness and ductility at yield strength levels up to 300,000 psi. It is recommended for high strength applications in the temperature range −320°F to 900°F. It is a martensitic steel strengthened by precipitation and an ordering reaction.

Composition:

Carbon	0.03 max.
Silicon	0.10 max.
Manganese	0.10 max.
Sulfur	0.010 max.
Phosphorus	0.010 max.
Molybdenum	4.60–5.00
Nickel	18.00–19.00
Cobalt	8.50–9.50
Titanium	.50–.70
Aluminum	.05–.15
Boron	.006 max.
Zirconium	0.02
Iron	Remainder

Physical Constants:

Specific gravity	8.0
Density, lb./cu.in.	0.289
Thermal coef. expansion/°F x 10^{-6} (70–900°F)	5.6
Modulus of elasticity, psi x 10^6	27.5

PROPERTIES

Table 1 – TYPICAL ANNEALED PROPERTIES

Tensile strength, psi	150000
Yield strength, psi (0.2%)	110000
Elongation, % in 2"	18
Reduction of area, %	72
Rockwell hardness	C30-32

Table 2 – TYPICAL HEAT TREATED PROPERTIES – Sheet
(.250" sheet, solution annealed at 1500°F for 1 hour, aged at 900°F for 3 hours, tested in transverse direction)

Tensile strength, psi	314600
Yield strength, psi (0.2%)	309700
Elongation in $4.5\sqrt{A}$, %	9.7
Reduction of area, %	35.0
Rockwell hardness	C55.1

Table 3 – ELEVATED TEMPERATURE PROPERTIES
(7/8" bar stock. Standard 0.505" dia. tensile specimens, solution annealed 1 hour at 1500°F, air cooled, aged 3 hours at 900°F. Specimens held at temperature 30 minutes prior to testing.)

Test Temperature °F	Tensile Strength psi	Yield Strength psi (0.2%)	Elongation in $4.5\sqrt{A}$ %	Reduction of Area %
600	256800	245600	6.8	48.1
800	240100	227700	7.7	55.8
900	210900	194800	11.8	61.9
950	189100	172900	11.5	66.9
1000	168000	153200	13.0	66.2

Table 4 – TYPICAL HEAT TREATED PROPERTIES – Bar
(Solution annealed at 1500°F for 1 hour and aged at 900°F for 3 hours)

Size Inches	Tensile Strength psi	Yield Strength psi (0.2%)	Elongation in $4.5\sqrt{A}$ %	Reduction of Area %	Rockwell "C" Hardness
5/8	294000	290000	11.8	56.6	54.3
1-1/4	296000	293000	11.6	55.8	54.7

COMPARISON OF THREE FLEXURAL HINGES

	Cartwheel flexure of diameter 2ρ	Single strip hinge of length 2ρ**	Crossed-strip hinge of diameter 2ρ**
Couple per unit angle (in.lbs/rad)	$\frac{4EI}{\rho}$	$\frac{EI}{2\rho}$	$\frac{EI}{\rho}$
Center shift (in) at angle θ	$-\frac{\sqrt{2}\rho\theta^2}{30}$	$\frac{\rho\theta^2}{6}$	$\frac{\sqrt{2}\rho\theta^2}{6}$
Maximum stress at angle θ radian (lb/in^2)*	$\frac{E\theta t}{\rho}$	$\frac{E\theta t}{4\rho}$	$\frac{E\theta t}{4\rho}$
Maximum curvature (in^{-1}) at angle θ	$\frac{2\theta}{\rho}$	$\frac{\theta}{2\rho}$	$\frac{\theta}{2\rho}$

* t represents the beam thickness

** loaded by a pure couple

COMMENTS

- Note that the cartwheel flexure has 5 times smaller center shift than the crossed strip hinge
- It is also four times stiffer and has four times greater stress at a given bend angle
- It is also much more resistant to buckling under heavy loading

PRECISION X-RAY SLIT DESIGN

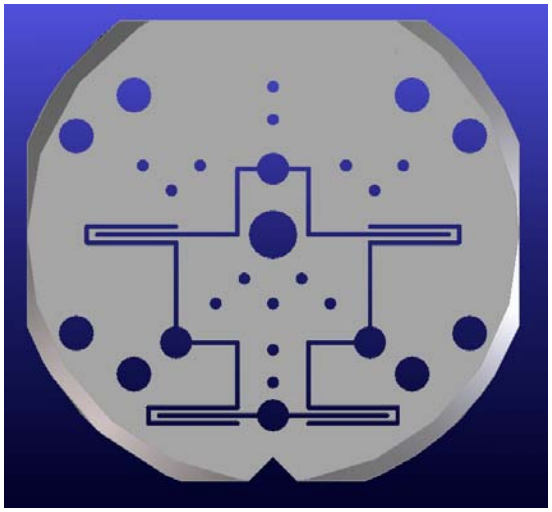

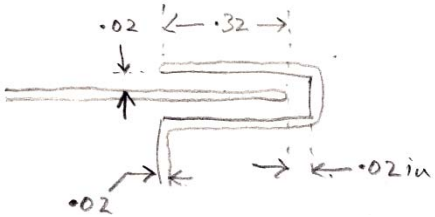

[Koch et al 1999]

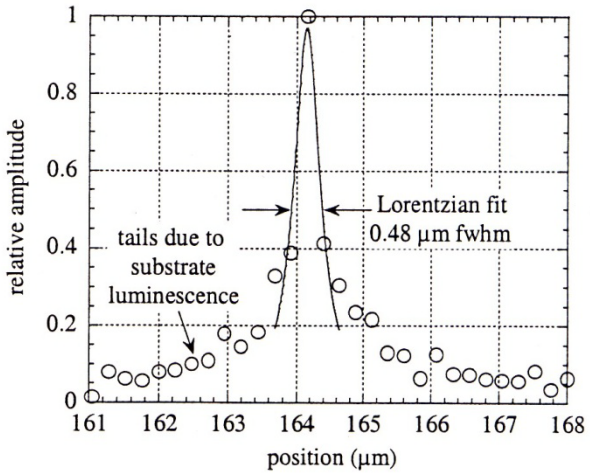

- X-ray slit with blades made of tungsten carbide - 20 micron depth at the aperture - works to about 20 keV
- Body: 5 cm diameter, made from polished invar
- Designed to be stacked with another unit to make an x-ray pinhole
- Driven by a micrometer via a helical compression spring to demagnify the micrometer motion

- Measurement by Koch et al for detector testing at ESRF
- X-ray energy = 11.5 keV
- Slit size about 0.5 micron demonstrated
- Also shown by cut-off of laser light of 0.6 micron wavelength (shows <0.3 micron capability)
- Note tricks to install the blades (1) have a lot of screws (2) install temporary "driver" screws on a removable block

CLASSICAL RECTILEAR MOTION FLEXURES

[Bonse 1971, Jones 1951]

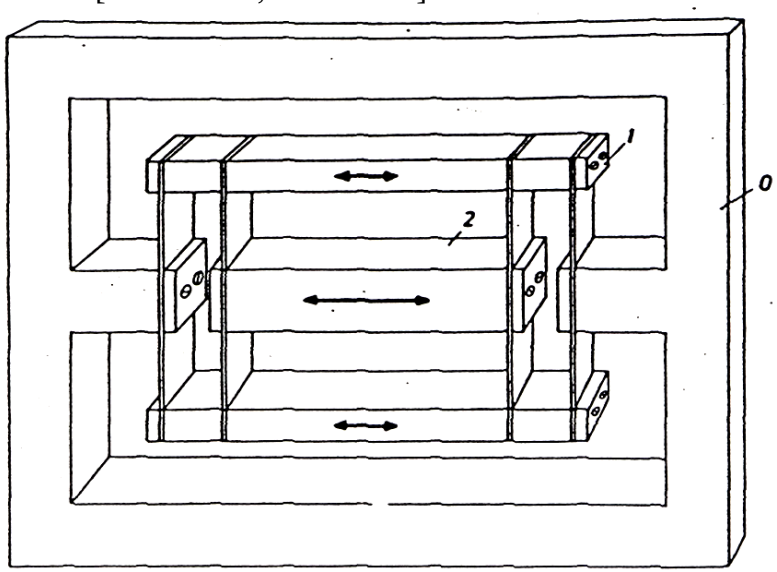

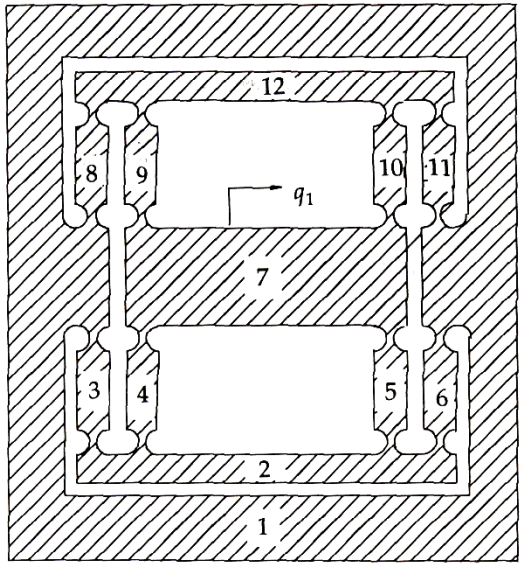

Can be cut by EDM

[Hoffrogge 1973 PTB)]

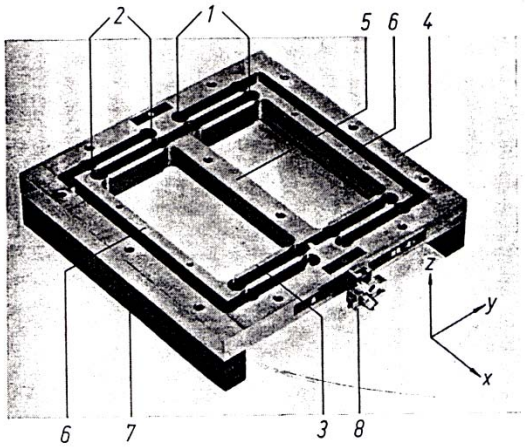

Various push points

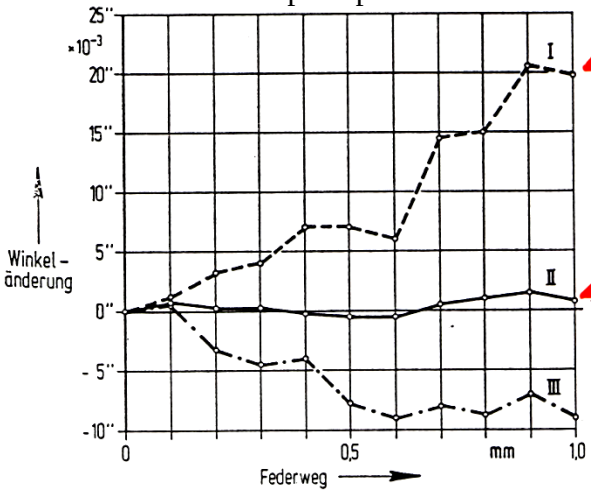

20 msec/mm error

1msec/mm error

AN AFM WITH HIGH MEASUREMENT ACCURACY

[Howells, Jacobsen and Lindaas 1993]

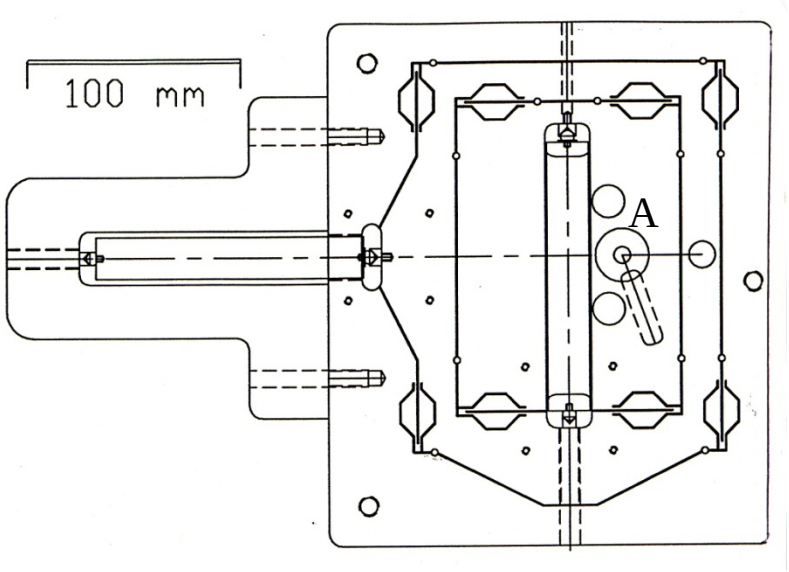

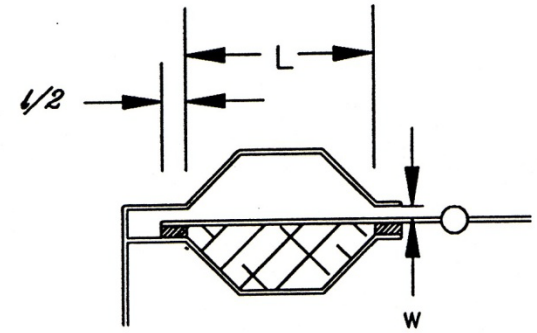

Material=aluminum

Flexure depth=28.7 mm

w=1.42 mm

L=22.25 mm

l/2=2.85 mm

Measurement of x-ray hologram fringes recorded in PMMA

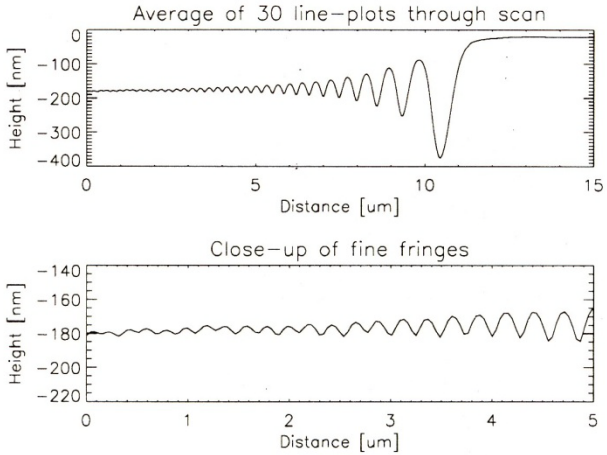

- Goal was to generate the raster scan of the AFM with metrological rather than pictorial accuracy in x, y and z. This was essentially a nm scale "densitometer" for x-ray holograms recorded on resist
- x and y scans were to be accurately perpendicular (<10μr)
- Scan range of 75x75 μm was to be driven by a Queensgate Instruments PZT and indexed by capacitance micrometer with linearity of a part in 10^4. A Park Scientific AFM head was located at A
- The linearity could not be verified but the indexers had a noise floor of 1 nm
- By analysing the bend element as two beams joined by a rigid member the spring constant of the mechanism is found to be 5.5×10^5 per axis - for the moving mass of 1 kg the resonant frequency is found to be 140 Hz (measured values were within 10% of the calculated)
- X-ray fringes measured (left) show that height resolution was 2-3 nm

SOFT X-RAY INTERFEROMETER OPTICS

A

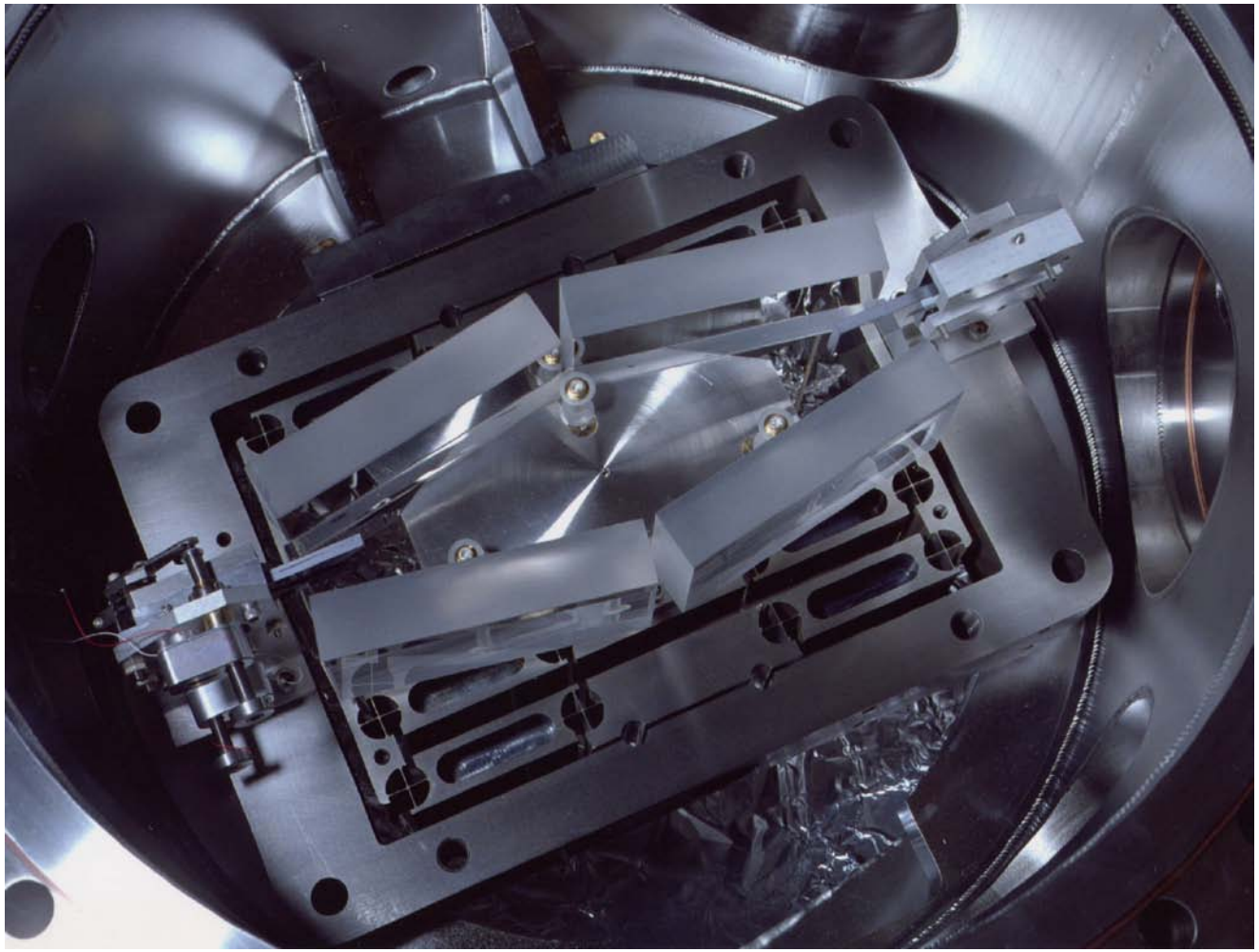

B

- Goal was to move the four mirrors in the direction AB so as to vary the path difference between rays that took the path via the top two mirrors and those that took the path via the bottom two (see next slide)
- The optics are assembled as a monolithic set and are mounted on a table in the center of the big rectangular flexure (36x25x5 cm)
- The motion is subject to tight tolerances but the main challenge was the total required motion of 15 mm