Proceedings of the MEDSI 2014 Conference

Melbourne, Australia - October 2014

Vacuum and Optical Design of the ALBA Infrared Beam Line MIRAS

Antonio Carballedo, Marcos Quispe, Carles Colldelram, Llibert Ribó, Alejandro Crisol
ALBA Synchrotron Light Source
Ctra. BP 1413 km. 3,3. 08290 Cerdanyola del Vallès, Spain
acarballedo@cells.es; mquispe@cells.es; ccolldelram@cells.es; lribo@cells.es; acrisol@cells.es

Abstract - The ALBA synchrotron light facility is a 3GeV storage ring able to work in top up mode which delivers X-Ray beams to seven beamlines, already in operation. ALBA is currently facing the second phase with construction of two new beamlines. One of them, called MIRAS, will be dedicated to Infrared microscopy and spectroscopy experiments. Nowadays the layout and vacuum system of the optical elements inside the ALBA tunnel are in detailed design phase. This paper is dedicated to the study of the vacuum profile in MIRAS. It consists in a preliminary calibration and validation of the simulation model without considering the additional beamline, followed by the calculation of the vacuum profile and optimization, in this case, with the insertion of MIRAS in the simulation model. The simulation has been done by means of the MolFlow+ software. The thermal effect of the extraction mirror has also been investigated by using the SynRad+ software. With these tools the vacuum system has been optimized in terms of the vacuum pumping capacity and position of all its elements and assuring the vacuum pressure rise at extraction position interconnection at 10^{-10} mbar level.

***Keywords*:** UHV, Synchrotron Radiation, Vacuum Chamber, MolFlow+, SynRad+.

1. Introduction

MIRAS beamline (Ellis, 2009), protagonist of the second phase that is currently facing ALBA, will be dedicated to Infrared microscopy and spectroscopy experiments. The light extraction is not tangential through the front-end as we are used to. In this case an extraction mirror (M1) is needed as it is seen in Fig. 1. The Infrared beam will be transferred to the End station by means of transfer mirrors (M2, M3 and M4). All this implies that the vacuum present in the storage ring and in the beamline until the diamond window is shared. This fact is important since the vacuum profile of the new beamline must assure a 10^{-10} mbar level in order to not affect the beam lifetime at the extraction position.

Two main steps were carried out in this study. Firstly, the creation of a simulation model which represents the storage ring sector where the infrared beam will be extracted. Once simulated, this model had to be calibrated with real data measured by the vacuum gauges to validate the model and to assure its reliability. The second stage represents the modelization of the new vacuum chambers of MIRAS. At that point, the validated model provided the vacuum profile of the beamline, which has been optimized according to the design requirements. The vacuum simulation has been done by means of MolFlow+ software (Web – 1), (Kersevan, 2009).

The thermal effect of the extraction mirror is also quantitatively analyzed. Using SynRad+ (Kersevan, 1993), the trajectory of the SR photons coming from the upstream bending magnet is

calculated and traced through the mirror until their absorption. This allows to obtain the power density as boundary condition and to simulate the thermal behavior of the extraction mirror.

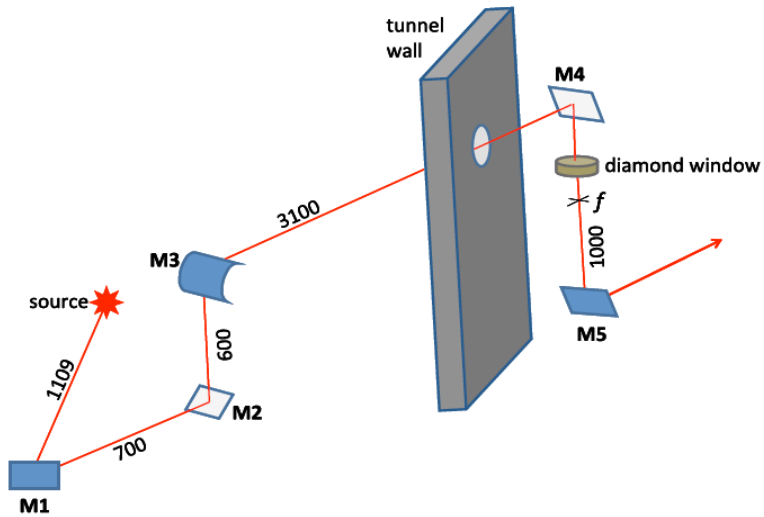

Fig. 1. Extraction optics scheme from source to experimental area (dimensions in mm).

2. Calibration of the model

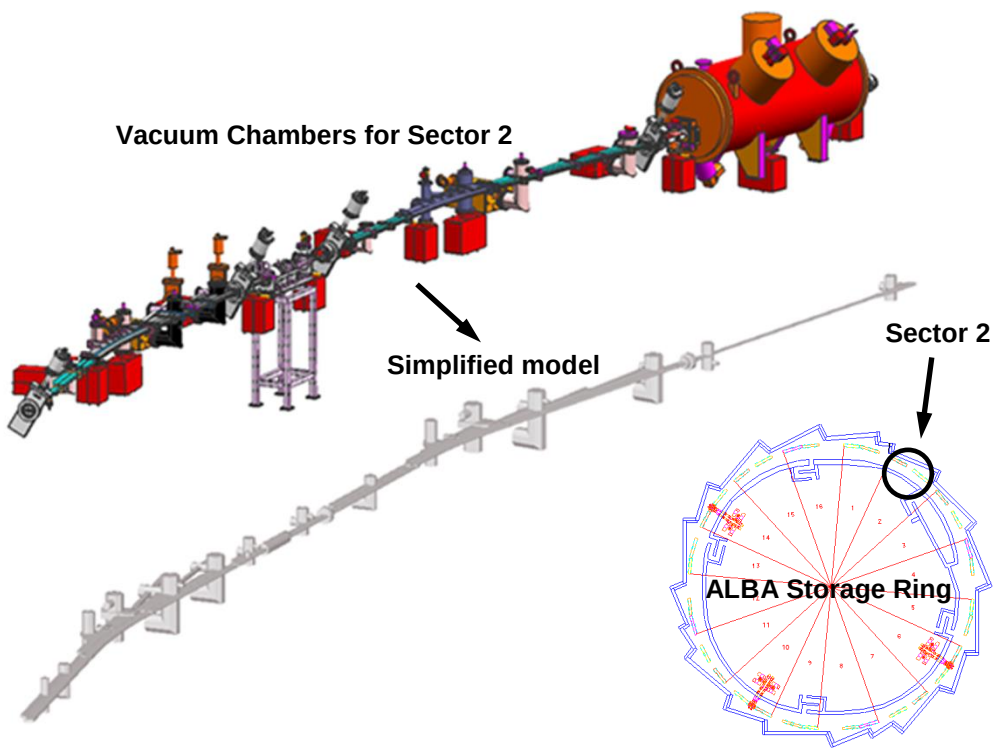

Fig. 2. Simplified model of the vacuum chambers for sector 2 of the ALBA Storage Ring.

The first step calculation was to calibrate the simulation model. For that a simplified geometry of the vacuum chambers that forms the sector 2 was created (see Figure 2). It basically consists on the fluid volume of the chambers, which were properly simplified to be used in MolFlow+. It was needed the consideration of the whole sector due to the periodicity in the pressure behaviour at both ends.

Once the model is created then the simulations parameters as pumping speeds and outgassing rates were defined accordingly to reality. Three different vacuum simulations were performed due to the consideration of the three most desorbed gases (H_2, CO and CO_2) and taking advantage of the linear behavior of the ultra-high vacuum systems, the partial pressure were summed at the conclusion.

The results are showed in Figure 3. The vacuum profile is calculated at the same position of the beam path (blue line) whereas the simulated values are measured in the positions of the gauges. The profile showed the evolution of pressure along the sector and the slightly difference between the real values and the simulated ones (Table 1).

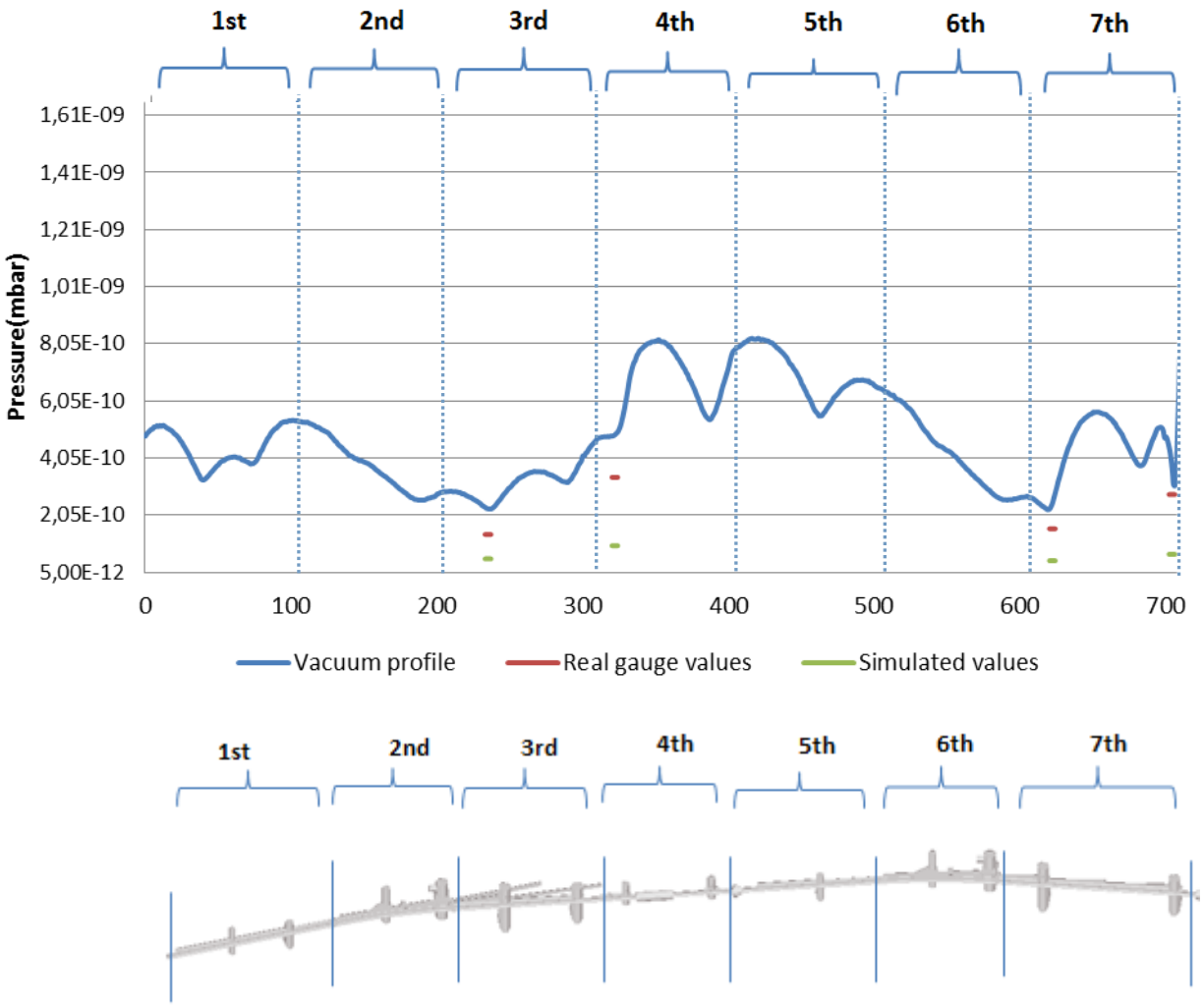

Fig. 3. Simulated vacuum profile for sector 2 of the Storage Ring and comparison of values at real position of the gauges.

For this calibration a parametric analysis was needed, in which several variables as gauge precision, localized outgassing or geometrical modifications were considered. Finally, an outgassing rate for stainless steel of $1{,}4 \cdot 10^{-11}$ mbar·l/s·cm^2 was used for a better calibration.

As three different vacuum simulations were performed with different desorbed gases (different molecular mass), the pumping speed of the ion pumps also was adjusted according to catalog information.

Table 1. Comparison between real and simulated values

	Simulated	**Real**	**Difference (%)**
Gauge 1 (mbar)	1.38E-10	1.82E-10	24.18
Gauge 2 (mbar)	3.38E-10	3.90E-10	13.33
Gauge 3 (mbar)	1.58E-10	1.60E-10	1.25
Gauge 4 (mbar)	2.38E-10	2.78E-10	14.39

Although the results showed some differences (especially for Gauge 1), the values were in the same order of magnitude (at 10^{-10} mbar level) then the model was accepted.

3. Optimization of MIRAS vacuum profile

Next step was inserting the MIRAS vacuum chamber in the model in order to start the study of dimensioning and optimization. The layout is the showed in the Figure 4.

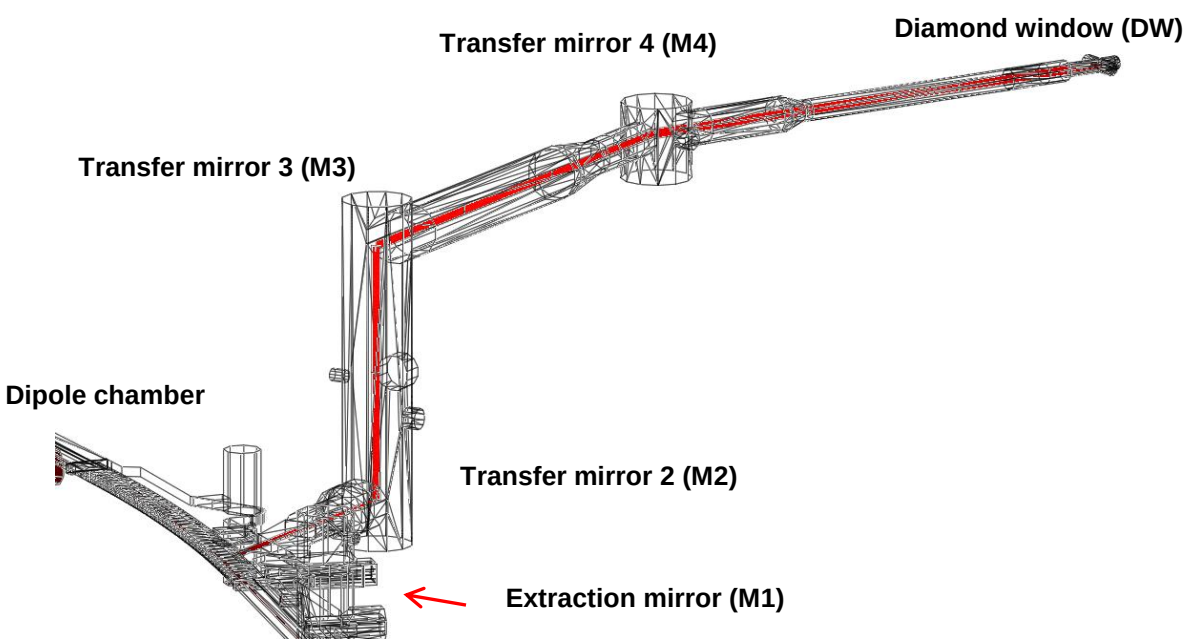

Fig. 4. MIRAS lay-out. Simplified model for vacuum simulations.

Maintaining the simulation parameters considered in the previous simulations, the study was done achieving the profiles of Figure 5.

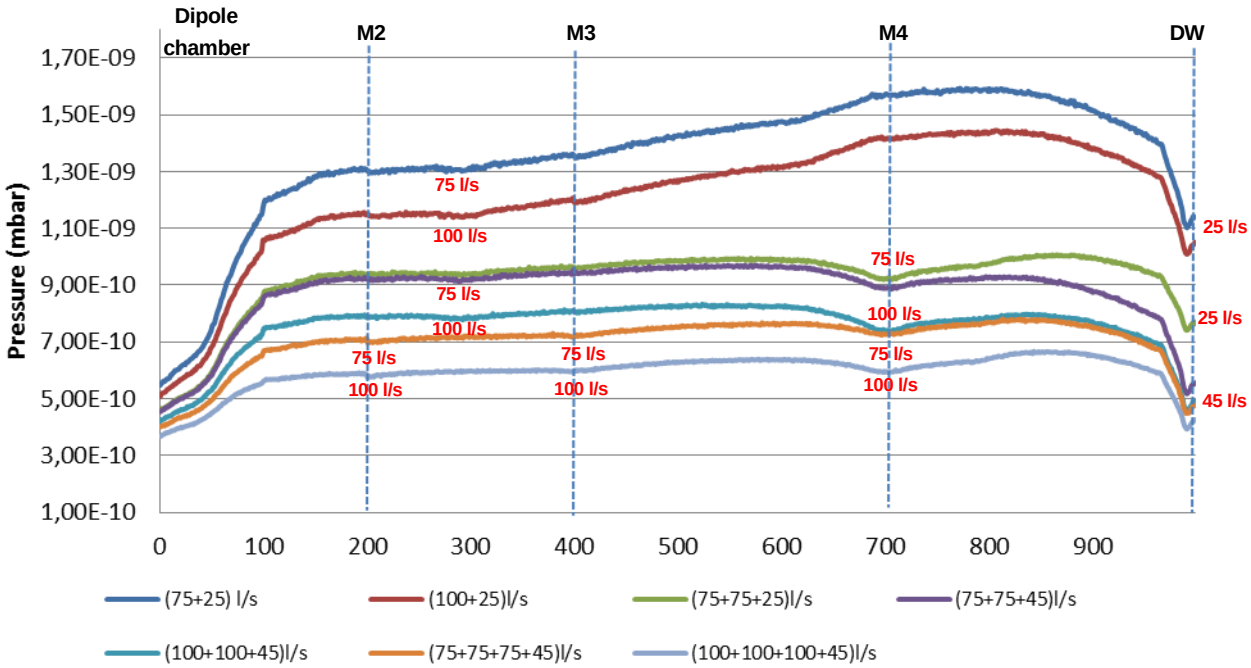

Fig. 5. Evolution of the vacuum profiles of MIRAS.

Blue profile represents the preliminary pump configuration, which has one ion pump of 75 l/s between M2-M3 and an ion pump of 25 l/s at diamond window. This profile was not acceptable because of the high pressure gradient in the connection with the dipole chamber and because it was at 10^{-9} mbar level. Therefore, changes in ion pump capacities and position were done. It was observed that the collocation of an ion pump in the surroundings of M4 improved significantly the profile, making it plane. A final positioning of ion pumps at the mirrors and the increasing of their capacity showed a considerable improvement in the profile (configuration 100+100+100+45 l/s).

Furthermore, the vacuum profile of the extraction mirror was also calculated, giving the profile showed in Figure 6.

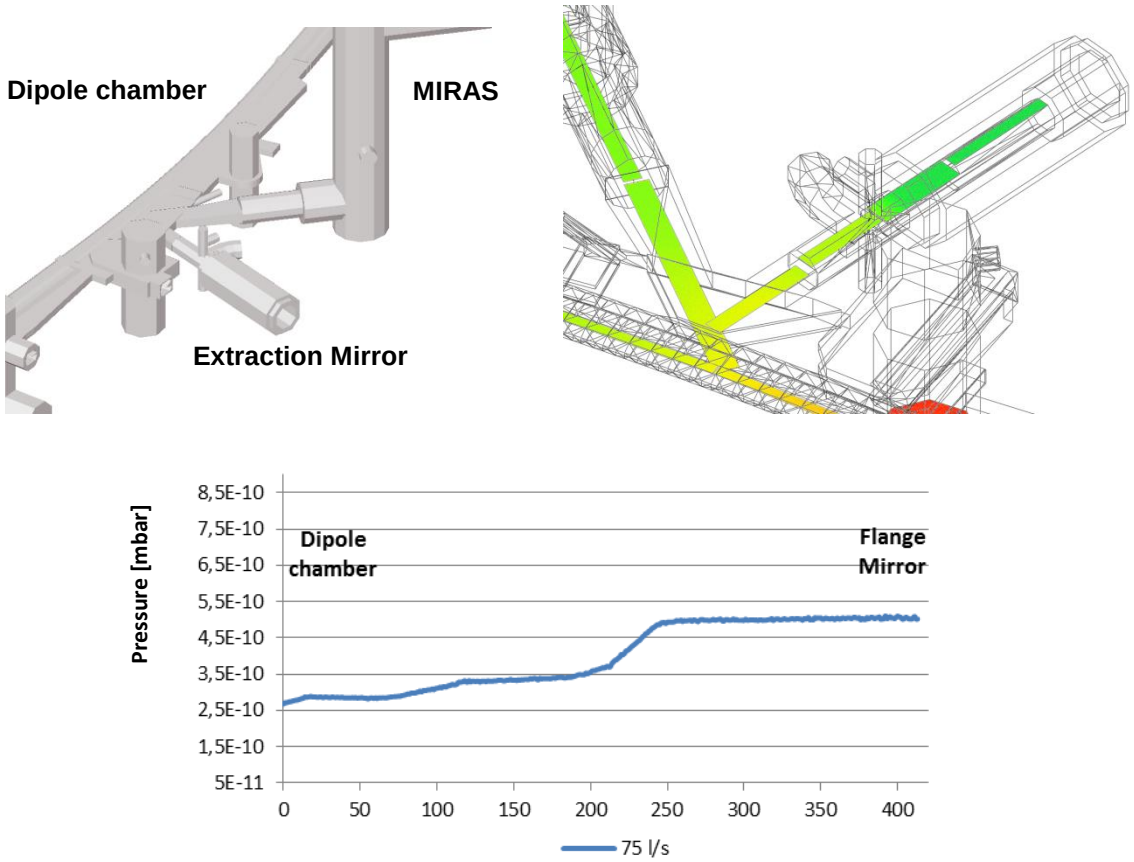

Fig. 6. Extraction mirror chamber and vacuum profile.

4. Power radiation deposition and thermal study of the extraction mirror

The extraction mirror is currently in design process as we need to evaluate the model subject to the impact of the bending magnet radiation. The first thermal results in this paper will indicate the need to modify the geometry of the mirror and/or the cooling type: natural or forced air convection or water cooling.

The power deposition is calculated by using SynRad+. This software can be used together with MolFlow+ for coupled synchrotron radiation/photodesorption simulations. SynRad+ calculates the synchrotron radiation trajectory from the electron beam path in the dipoles (see Figure 7a). This software generates the photons which collides with the components, in this case, the extraction mirror, and gives values of power density (W/cm^2) and photon flux (ph/cm^2).

For this case the parameters used were: beam energy of 3 GeV, current of 100 mA and dipole magnetic field 1,42 T. The results of the power density simulations are showed in Figure 7b.

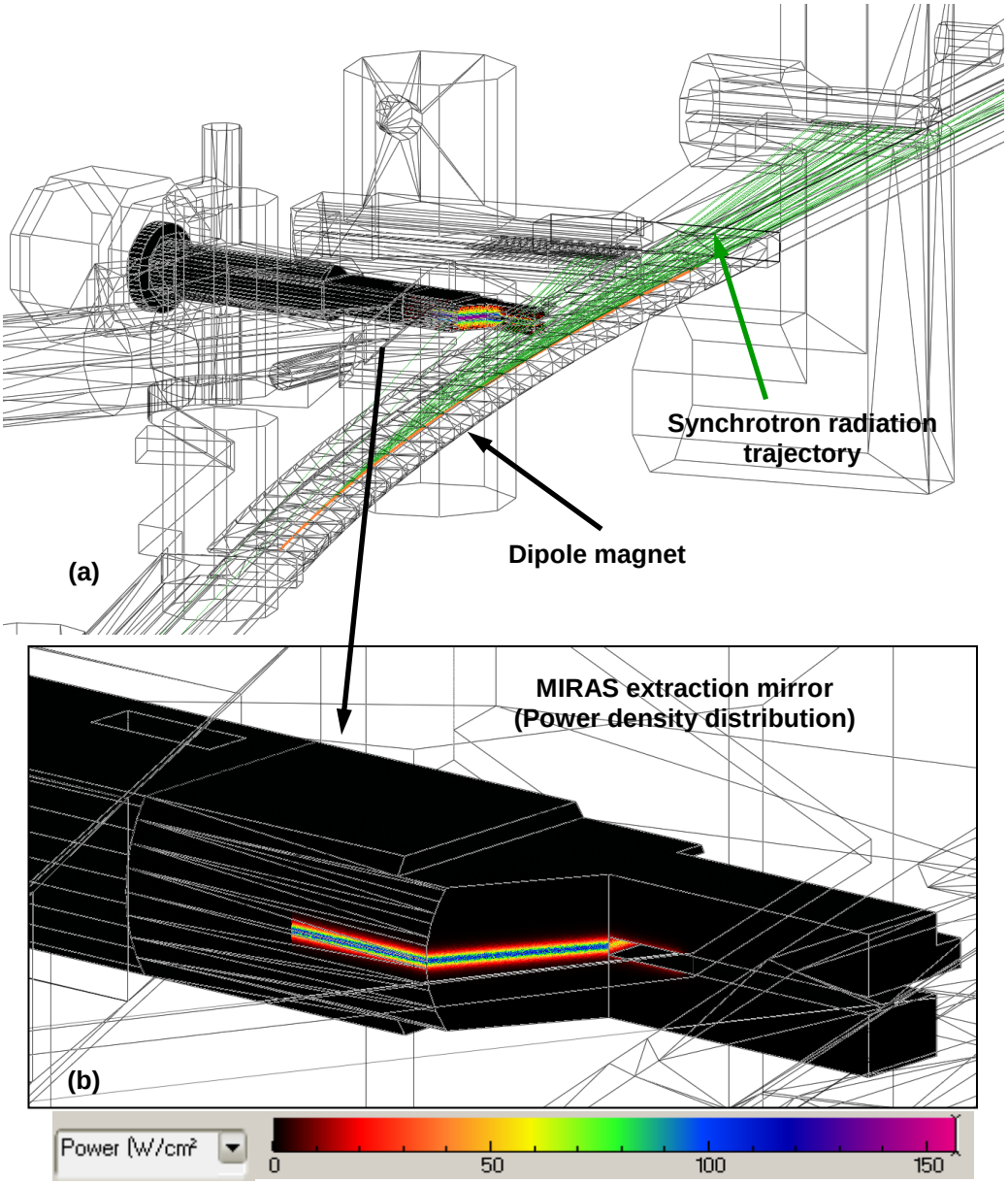

Fig. 7. Power density on the extraction mirror. (a) Detailed of the synchrotron radiation trajectory. (b) Footprint of the power density distribution.

Once the power density distribution is calculated by SynRad+ (see Figure 7b), before to transfer this information in ANSYS (Figure 8a), an intermediate interpolation step is done in order to remove some noise of the power density which is consequence of the Monte Carlo fundamentals.

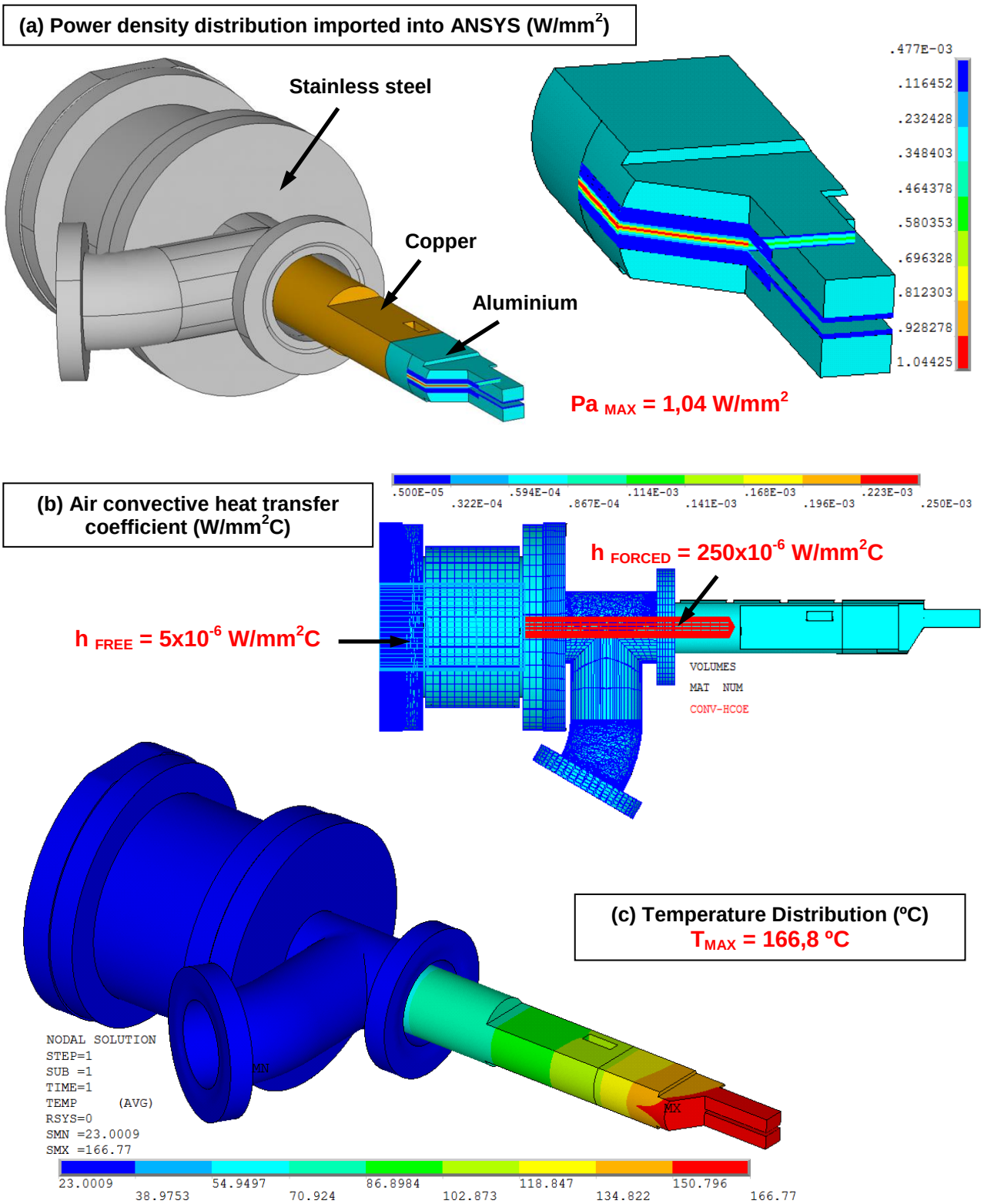

Fig. 8. FEA model and results in ANSYS. (a) Power density distribution and materials. (b) Distribution of the air convective heat transfer coefficient. (c) Temperature results.

For this first thermal study the following conditions have been implemented in ANSYS (See Figure 8):

- Power boundary conditions based on SynRad+ (Figure 8a).
- Thermal conductivities: Stainless Steel = 16 W/mK; Copper = 400 W/mK; and Aluminum = 205 W/mK (Figure 8a).
- Air boundary conditions: (i) the inside hole mirror subject to forced convection (h_{FORCED} = 250 W/m^2C); (ii) the external walls of the vacuum chamber subject to free convection (h_{FREE} = 5 W/m^2C) (Figure 8b).
- Thermal contact conductance between the Aluminum mirror and the Copper branch (indium foil at the interface) equals 5000 W/m^2C.

Under the previous conditions the temperature peak equals 166,8 ºC (Figure 8c). This result is unacceptable for this application. Based on this preliminary result we are implementing modifications in the geometry of the mirror in order to avoid as much as possible the impact of the radiation coming from the bending magnet and evaluating other options for the cooling type.

5. Conclusions

This work has dealt with a complete study of the vacuum system of the new beamline at ALBA: the Infrared microscopy and spectroscopy experimental line MIRAS.

Taking advantage of the Monte Carlo vacuum simulators MolFlow+ and SynRad+, which are currently developed at CERN, this work made a deep optimization of the dimensioning of the vacuum system in order to accomplish with the required technical specifications.

Comparing the historical data of real vacuum pressure for sector 2 with the results coming from the simulations, a good agreement is obtained as they are in the same order of magnitude (at 10^{-10} mbar level).

The preliminary thermal study of the MIRAS extraction mirror demonstrates the need to continue with the optimization of the model as the peak of the temperature is very high.

References

G. Ellis (2009), An Infrared Microspectroscopy Beamline for ALBA. A proposal for the SAC.

R. Kersevan (1993), SYNRAD, a Monte Carlo synchrotron radiation ray-tracing program, Proceedings of the 1993. Particle Accelerator Conference, vol.5, p 3848-3850.

R. Kersevan, J-L Pons (2009), “Introduction to Molflow+”, JVST A27 (2009), p1017-1023.

Web sites:

Web-1: http://test-molflow.web.cern.ch/content/about-molflow