A Novel Design of High Power Masks and Slits

Sushil Sharma
NSLS-II / BNL

Acknowledgment

- Coauthors:
  - C. Amundsen, F. DePaola, A. Hussain, F. Lincoln (NSLS-II)
  - I.C. Sheng (TPS)

- G. Aparicio, J. Duff, M. Loftus, L. Reffi, J. Tuozzolo, K. Wilson

Outline

- Introduction

  Present designs of the NSLS II front end masks and slits

- New Design Features
- Thermal Analyses
- Summary and Conclusions

Typical NSLS-II ID Front End Configuration

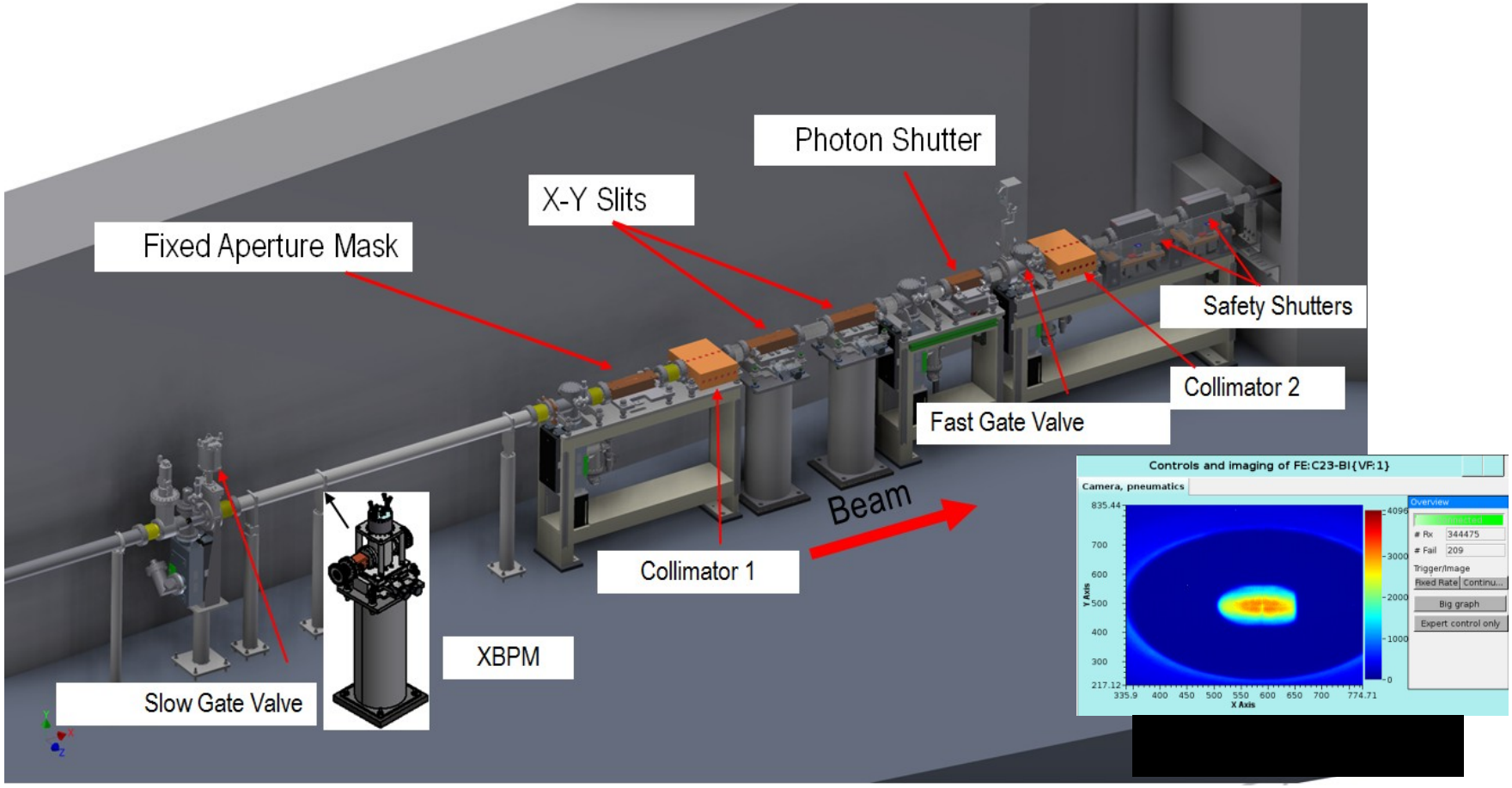

High heat load components of a typical ID front end consist of a fixed aperture mask, X-Y slits and a photon shutter.

Design and Manufacturing Issues

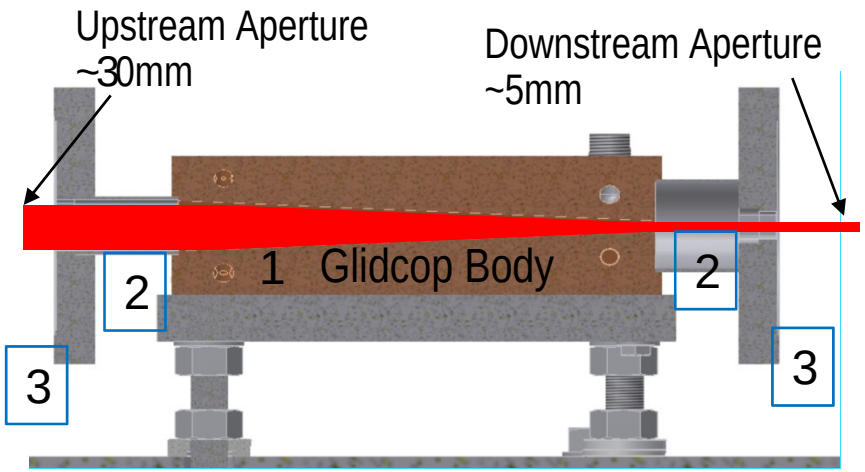

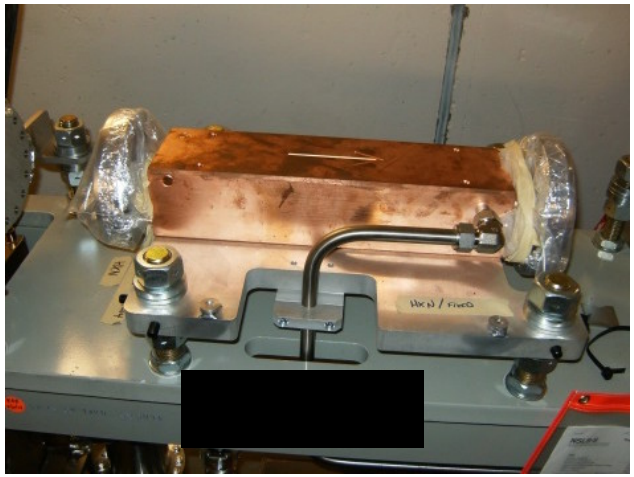

- Ray tracings determine upstream apertures. Ray tracings are dependent on beam deviations, ID properties and their locations:
  - → Multiple iterations of the designs.
  - → Different designs for the same components (5 fixed masks for 6 front ends).
- Procurement of Glidcop.
- Manufacturing steps:
  - EDM of apertures.
  - Gun drilling of cooling channels.
  - Hydrogen brazing of stainless steel transition pieces [2] and water fittings.
  - Welding to stainless steel flange [3].

New Design Features

1. Exit Aperture: machined only on inclined upper or lower surface that intercepts the beam

   → Common designs for masks, slits and photon shutters.

2. Integral Conflat Flanges: Conflat knife edges are built into the main body :

   → Single piece construction without brazing or welding.

3. Copper Alloys Selection: the design allows the use of readily available hard copper alloys other than Glidcop.

4. Internal fins:

   → Thermal efficiency

   → Trapping of scattered beam

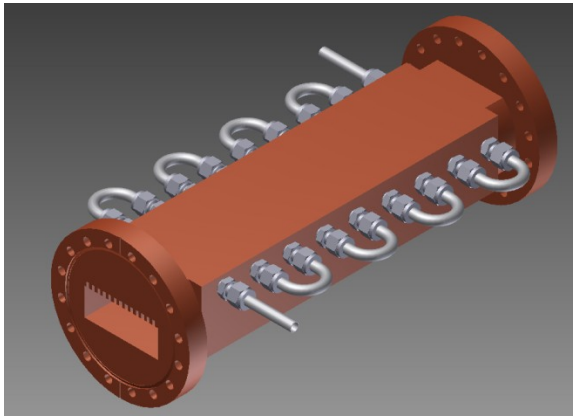

Model of a New Mask

Design Feature 1 – Exit Aperture

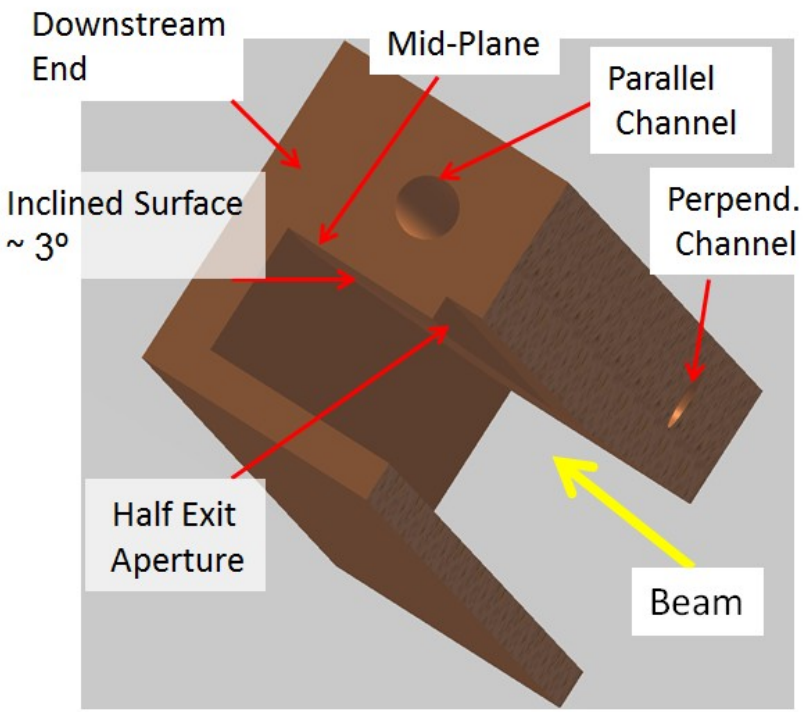

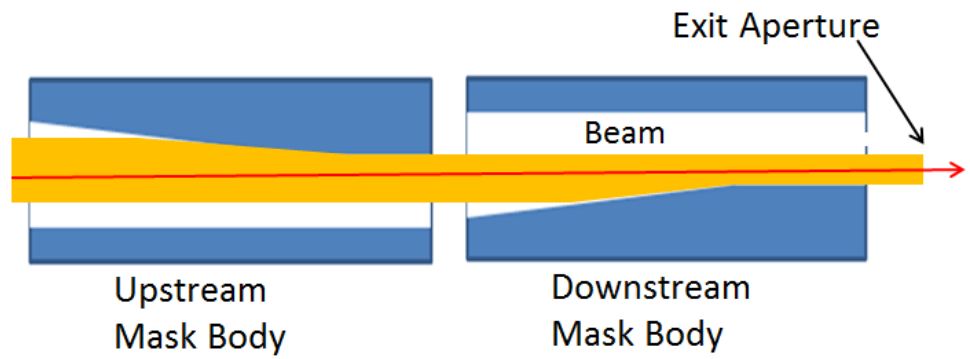

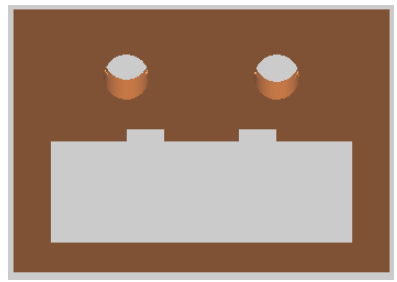

Half apertures for a canted front end mask.

- In the new design, the half exit aperture is machined only in one beam-intercepting inclined surface. The full aperture is formed by two mask bodies.
- The apertures are essentially independent of ray-tracings.
- The half exit apertures (two for the canted front ends) can be built as the last manufacturing step.

Design Feature 2 – Integral Conflat Flanges

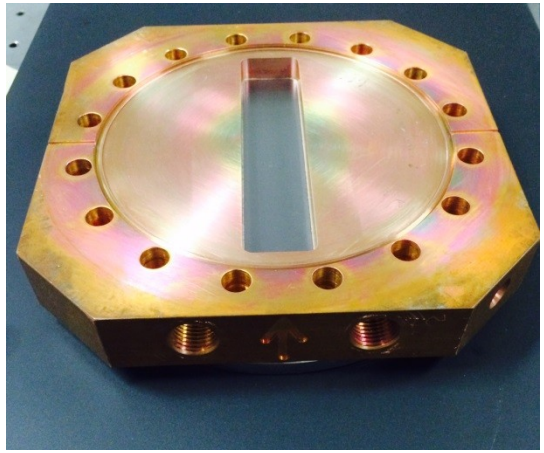

Prototype Be Window
(Diffusion Brazed)

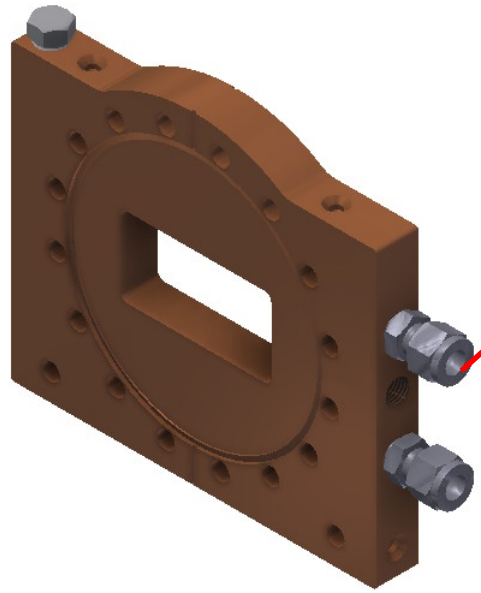

Flange Absorber

Flare Fittings and
Copper Gaskets
"Flaretites"

Recently double-sided Glidcop-Al15 Conflat flanges with cooling channels were built and tested at NSLS-II/BNL*. Such flanges are already being used masks and absorbers.

Ref: Hussain M, et al. " Bending Magnet and 3-Pole Wiggler Frontend Design", MEDSI2014

* BNL Patent Pending.

Design Feature 3 - Copper Alloys Selection

- The possibility of using other “hard” copper alloys besides Glidcop is possible once brazing is eliminated from the design.
- Hard Copper Alloys with comparable thermal conductivity:
  - Dispersion strengthened (DS) alloys: Glidcop-Al15, Glidcop-Al25, MAGT-0.2
  - Precipitation hardened (PH) alloys:

    CuCr

    CuCrZr, CuNiBe, CuNiSi

    Ref: Li M. and Zinkle S. J. (2012) Physical and Mechanical Properties of Copper and Copper alloys, Comprehensive Nuclear Materials, Vol. 4, pp 667-690

    (International Thermonuclear Experimental Reactor (ITER) Project)

Copper Alloy CuCrZr versus Glidcop

CuCrZr is widely available in all sizes from many suppliers and is considerably less expensive. (Ageing temperature 450-480 ºC)
)

Mechanical Properties:

- Thermal Conductivity (RT):

Glidcop Al25, Al15: 344 – 365 W/(m.K)
CuCrZr: 314 – 335 W/(m.K)

- Elastic Modulus:

Glidcop Al15, Al25: 130 GPa
CuCrZr: 123 GPa

- 0.2 % Yield Strength, (RT, Cold Worked):

Glidcop Al15, Al25: 470 – 580 MPa
CuCrZr: 350 - 550 MPa

- Coeff. Of Thermal Expansion:

Glidcop Al15, Al25: 16.6 µm/K
CuCrZr: 17.0 µm/K

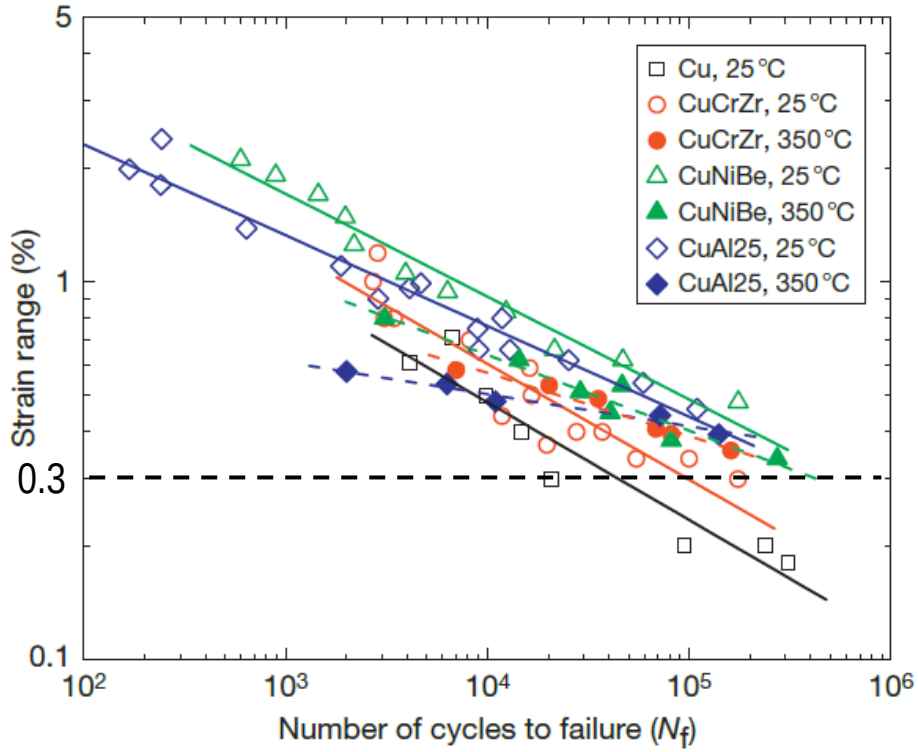

Ref: Li M. and Zinkle S. J. (2012) Physical and Mechanical Properties of Copper and Copper alloys, Comprehensive Nuclear Materials, Vol. 4, pp 667-690

Tests on CuCrZr Conflat Flanges and Flare Fitting Connections

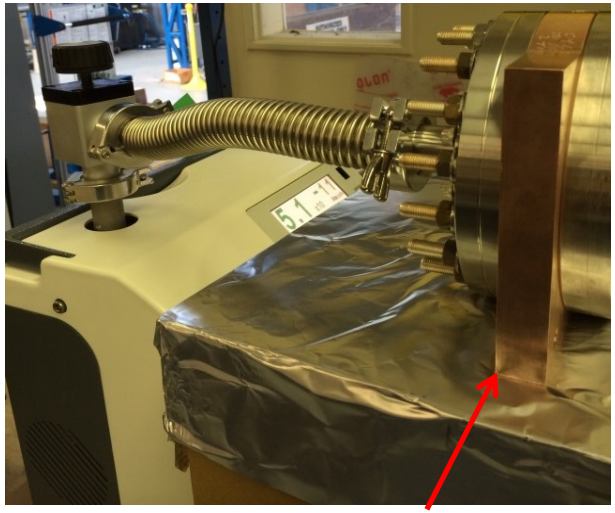

Double sided 6” Conflat Flange made from CuCrZr

- 3 flanges, 3 bakeout cycles (200^0 C)
- Copper gasket replaced after each test
- Helium leak test
- No change in Rockwell hardness (89, B scale)

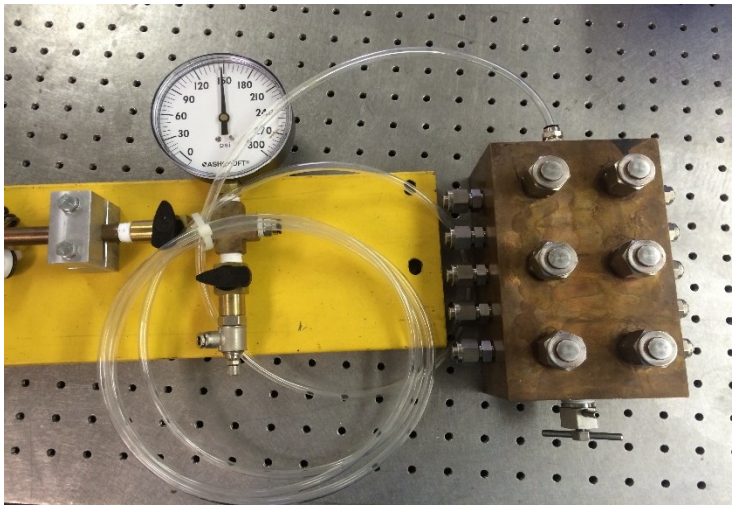

Tests on 16 flare fittings connections:

- 150 psi N2 (24 hours)
- 200 psi hydrostatic (2.5 hours)
- 3 bakeout cycles to 200^0 C
- Installed fittings 10 times, tested to 150 psi N2

Design Feature 4: Internal Fins

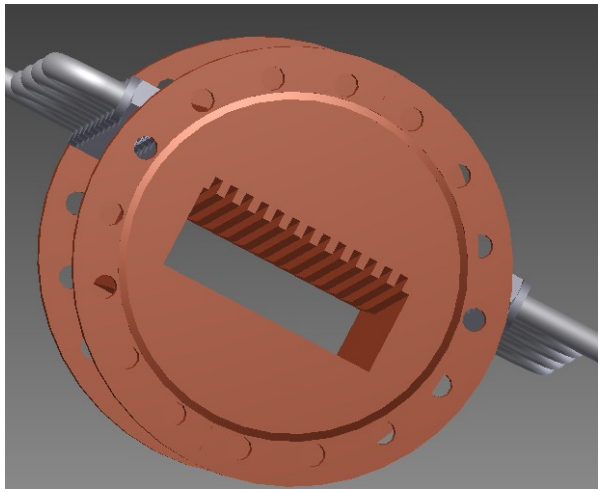

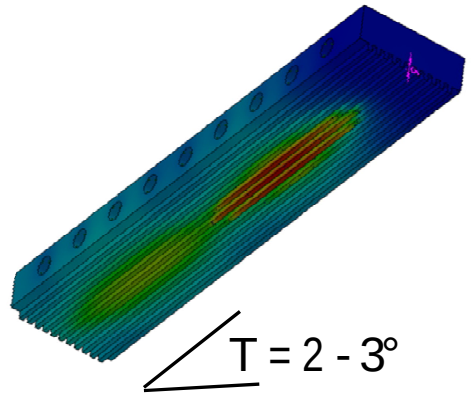

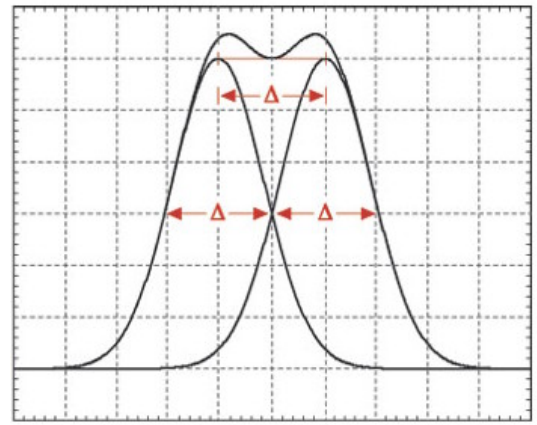

Internal Fins on the Beam Intercepting Surface

Fin Height: ~ 5 mm
Fin width and Spacing: ~ 3mm

Δ = FWHM = 2.355 s →

Fin Height (mm) = Source_Distance (m)* 2.355*(608/(1957*E(GeV)) / Cos (θ)

- Internal fins are easy to machine with wire EDM.
- The fins divide the beam footprint in two parts improving thermal efficiency.
- The fins also trap scattered beam.
- *To prevent beam from escaping through the grooves, the angle of incidence must be increased (e.g. from 2° to 2.66°).*

FE Thermal Analyses

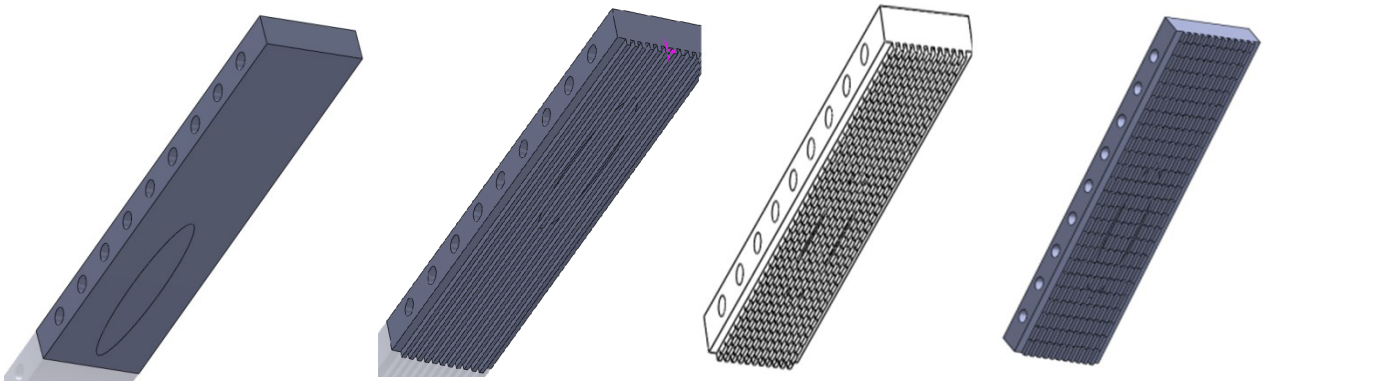

Flat | Fins, no grooves | Grooves at 10 mm | Grooves at 15 mm

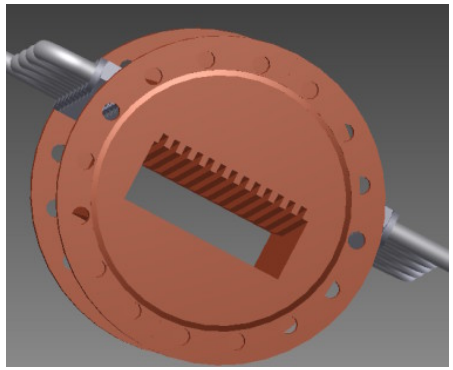

- Cross grooves of depth of 3/5 fin-height are introduced to relieve stresses on top of the fins.
- For thermal efficiency comparisons, Glidcop Al15 material properties in elastic range are used.
- Cooling film coefficient = 0.01 W/mm^2
- Power Density: 103 kW/mrad^2, (NSLS-II Undulator U14 at 25 m, 3GeV, 500 mA)

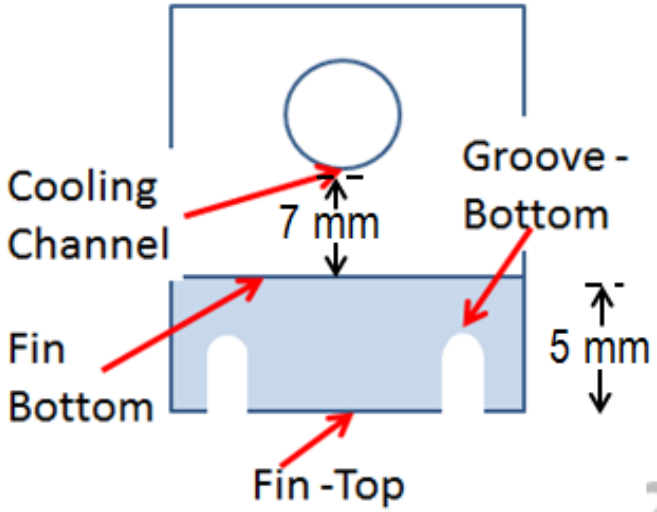

Flat Surface

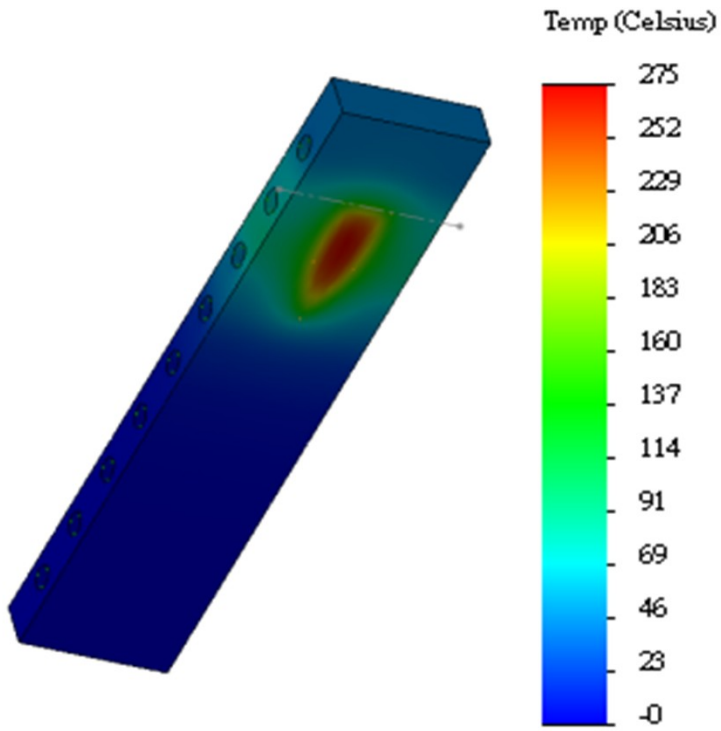

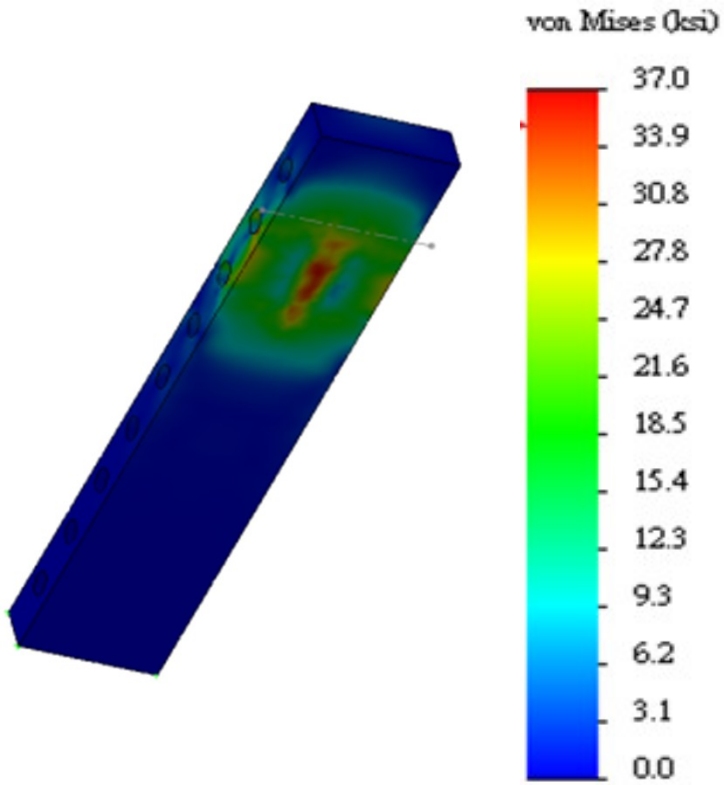

Top surface maximum stress : 37 Ksi
Cooling Channel Temperature: 195° C

5 mm Fins (no Grooves)

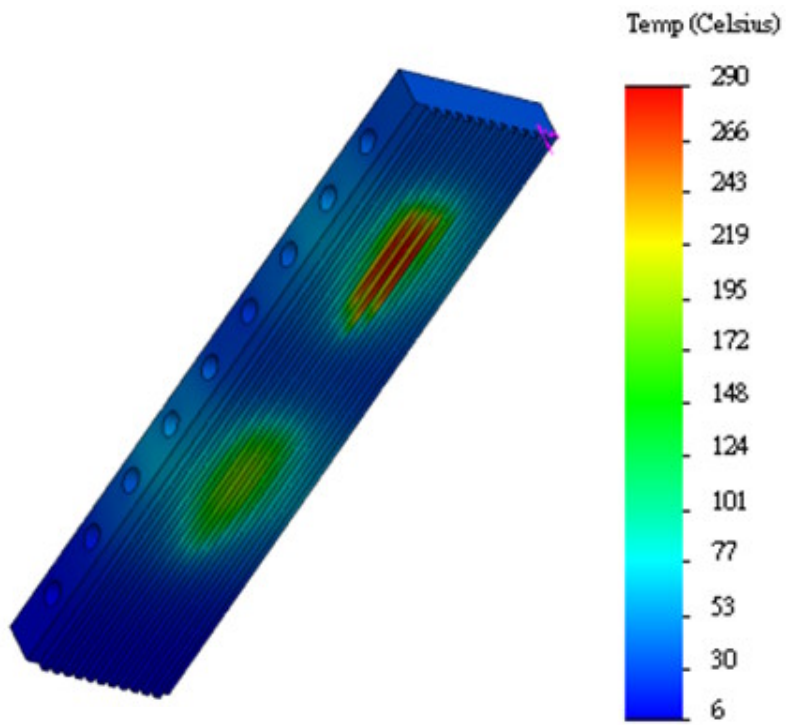

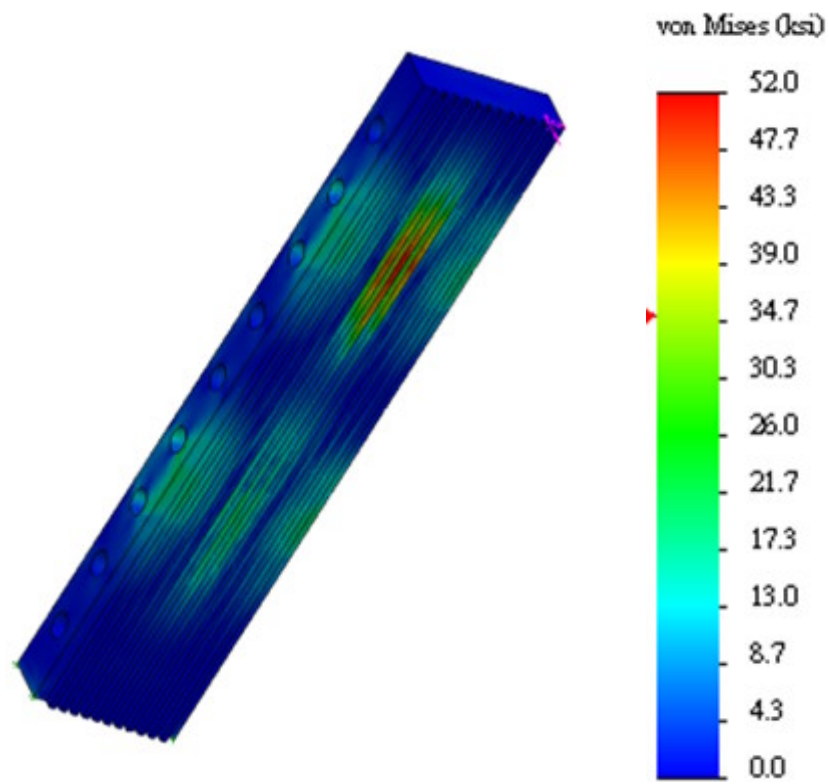

Fin-top maximum stress : 52 Ksi
Fin-bottom maximum stress: 21 Ksi
Cooling Channel Temperature: 125° C

5 mm Fins with Grooves at 10 mm

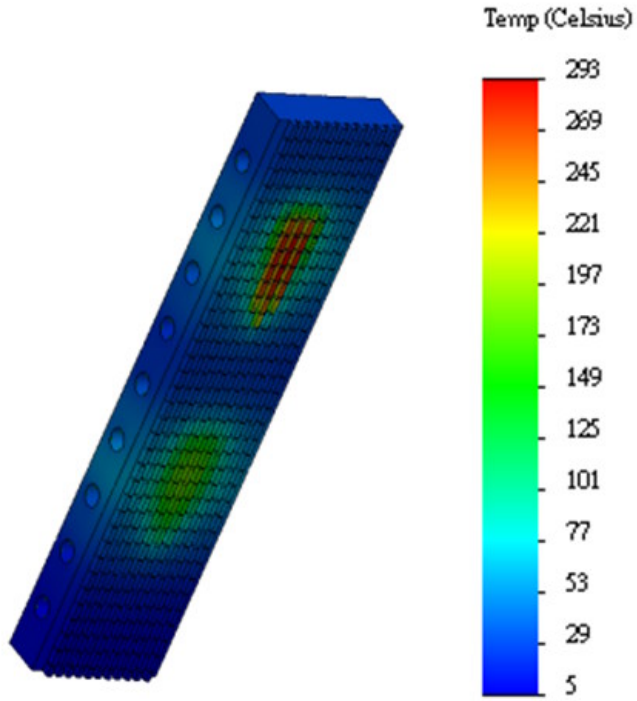

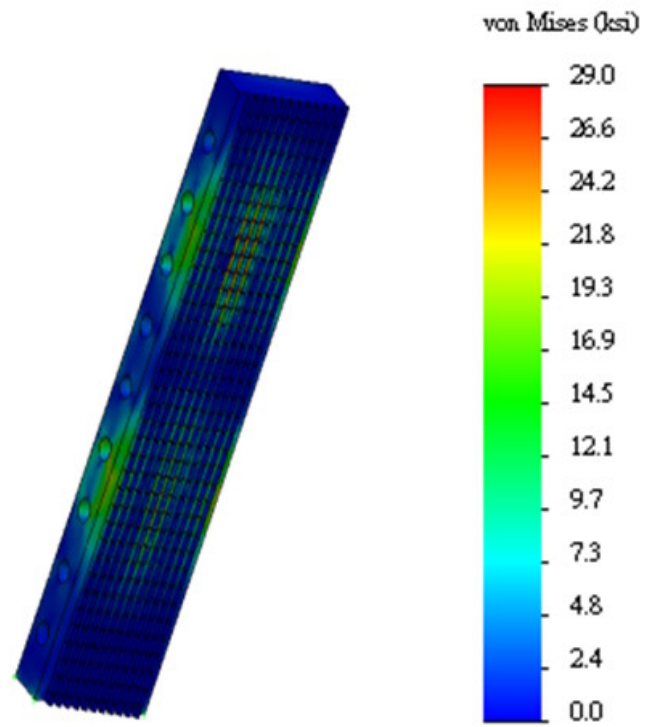

Fin-top max stress: 14 Ksi
Groove-bottom max stress : 29 Ksi
Cooling Channel Temperature: 123° C

5 mm Fins with Grooves at 15 mm

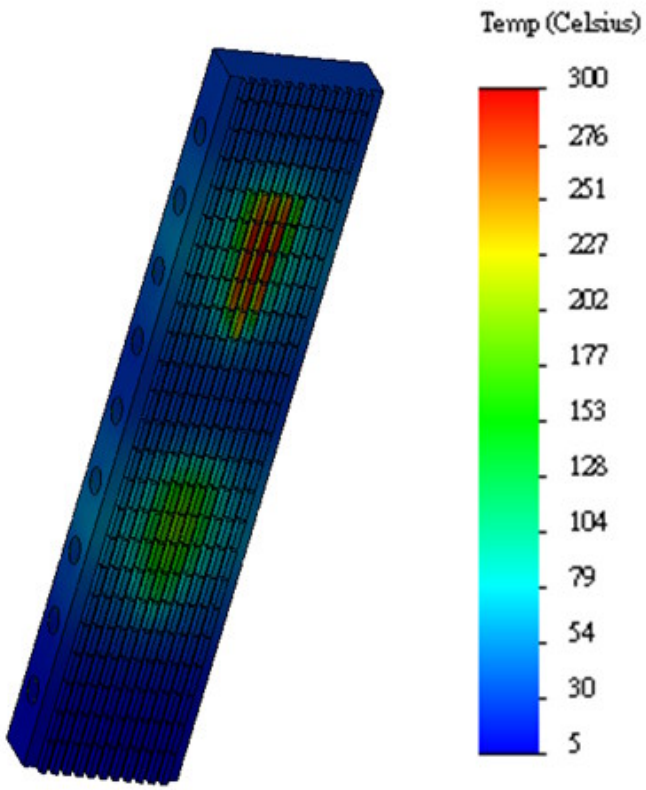

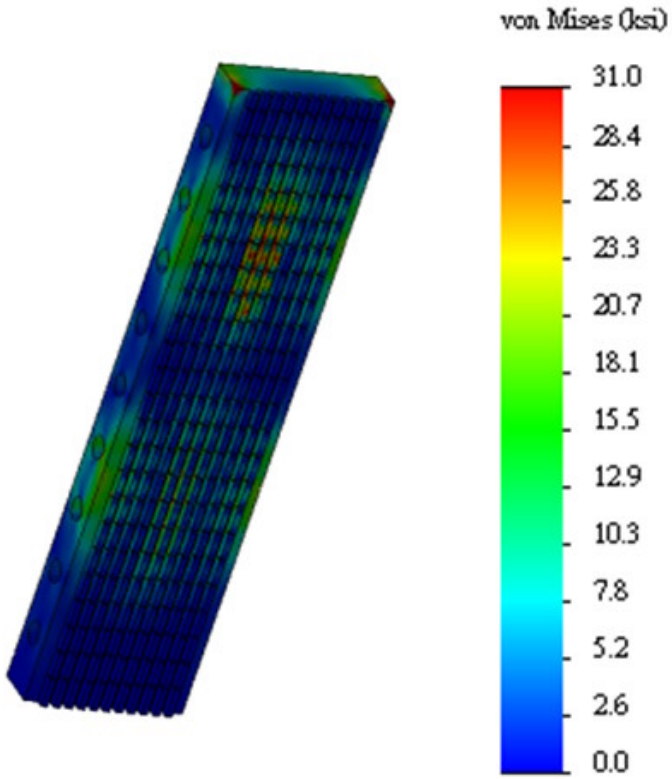

Fin-top maximum stress : 31 Ksi
Groove-bottom maximum stress: 25 Ksi
Cooling channel temperature: 114° C

Fin Efficiency Comparison

	Temperature (Fin Top), ºC	Cooling Channel Temperature, ºC	Stress, Top, Ksi	Stress, Fin/Groove Bottom, Ksi
Flat Surface[1]	275	195	37	37
5 mm fins[2], no grooves	290	125	52	21
5 mm fins[2], grooves at 10 mm	293	117	14	29
5 mm fins[2], grooves at 15 mm	300	117	31	25

[1]Angle of incidence = 2°
[2]Angle of incidence = 2.66° (increased in order to prevent beam escaping between the fins)

0.3% strain → ~ 390 MPa → 57 Ksi

It is preferable to keep stresses low at the bottom of the fins and grooves → fins with grooves at 15 mm provide better results.

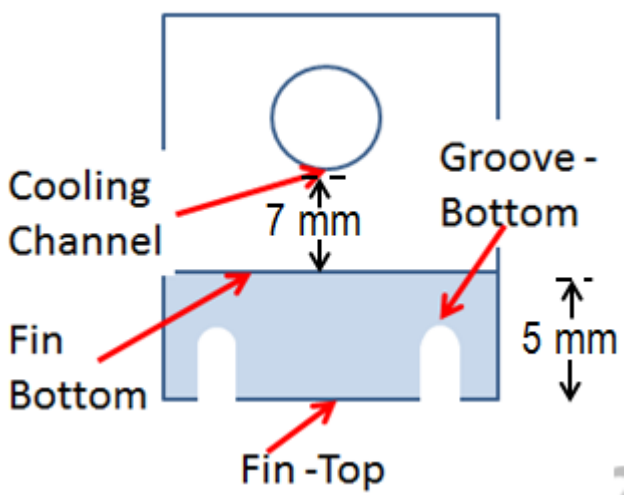

Alternate Fixed Mask Design

Beam

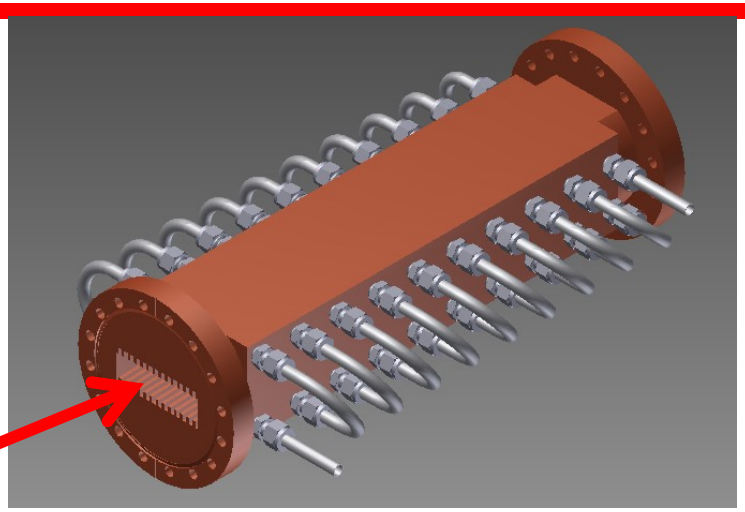

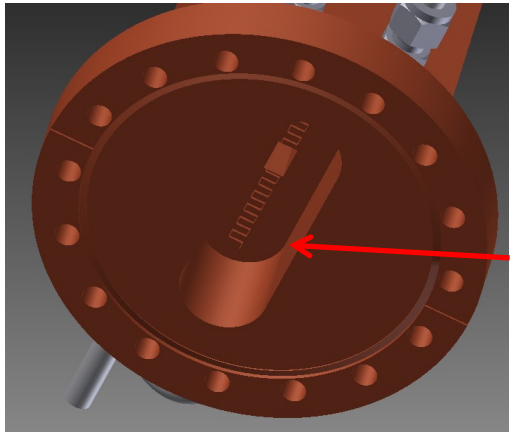

Downstream End

Interlocking Fins and EDM Wire Gap (0.3 mm)

- Beam is intercepted by both the top and the bottom surfaces. The fins interlock at the downstream end. Cross grooves may not be necessary but can be made with RAM EDM.
- The downstream end needs to be bent both horizontally and vertically to close the EDM wire gap.
- Another option is to attach a downstream water-cooled CuCrZr Flange.

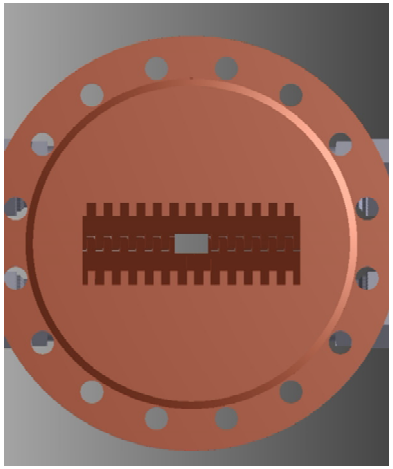

Closing the wire gap by horizontal bend of downstream end (50 mm by 0.5º)

Summary and Conclusions

An adaptable and cost-effective design has been developed for the front end high-heat load components. The main features of the new design are:

- Exit aperture on upper or lower inclined surface– leads to a common and flexible design.
- Integral Conflat Flanges – eliminate brazing and welding.
- Copper Alloys Selection - CuCrZr is less expensive and widely available.
- Internal Fins – for thermal efficiency and trapping scattered beam.

5 mm fins with grooves at 15 mm provided better thermal efficiency than other configurations.