Mechanical Engineering Solutions for the Diamond DDBA Project

Jim Kay
Head of Engineering
Diamond Light Source

MEDSI 2014 Australian Light Source

diamond

Talk Outline

- Introduction to Diamond
- The DDBA project motivation
- Some Engineering Detail

Where we are:

Located on the Harwell Science and Innovation Campus, Oxfordshire, UK

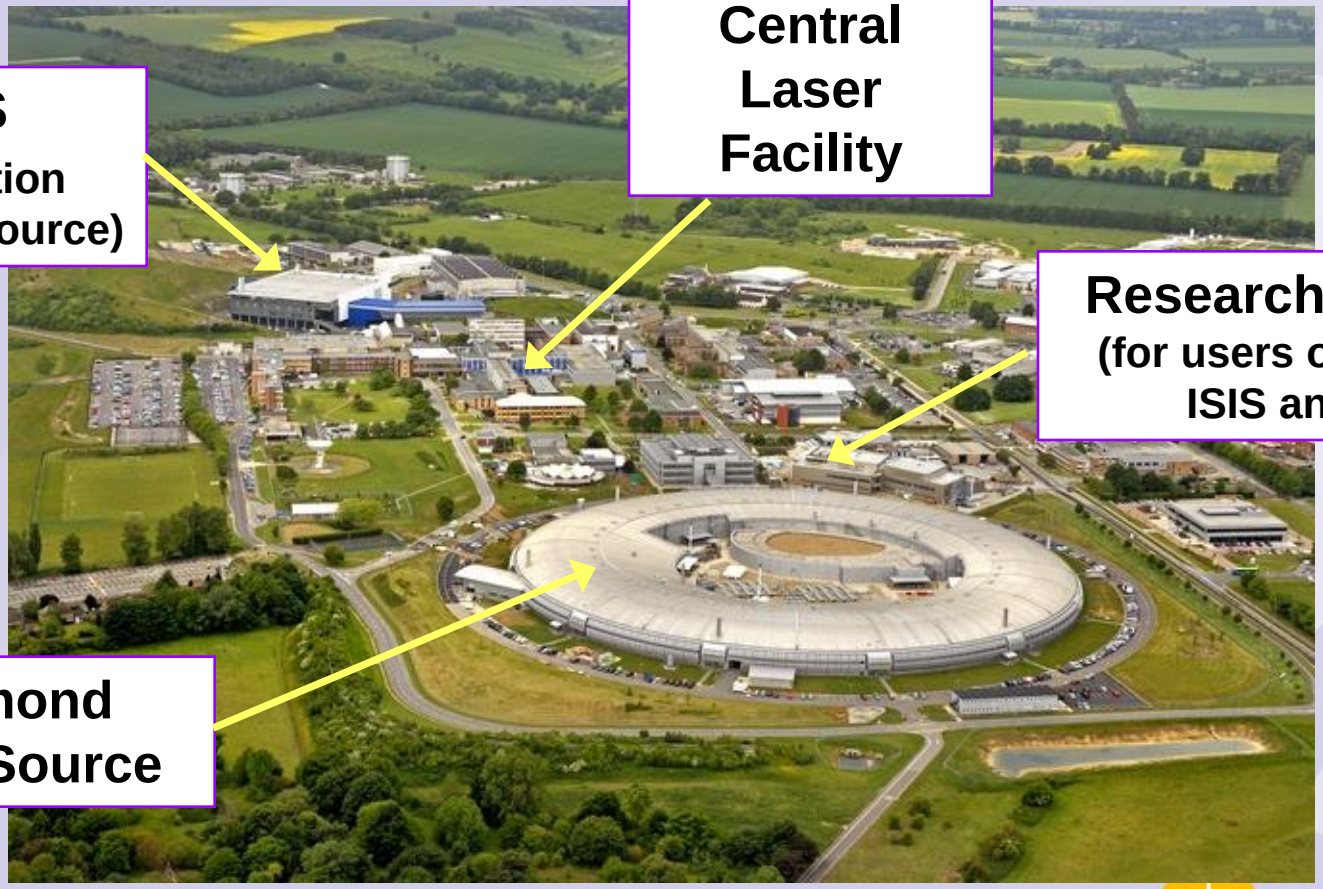

diamond

Diamond Layout

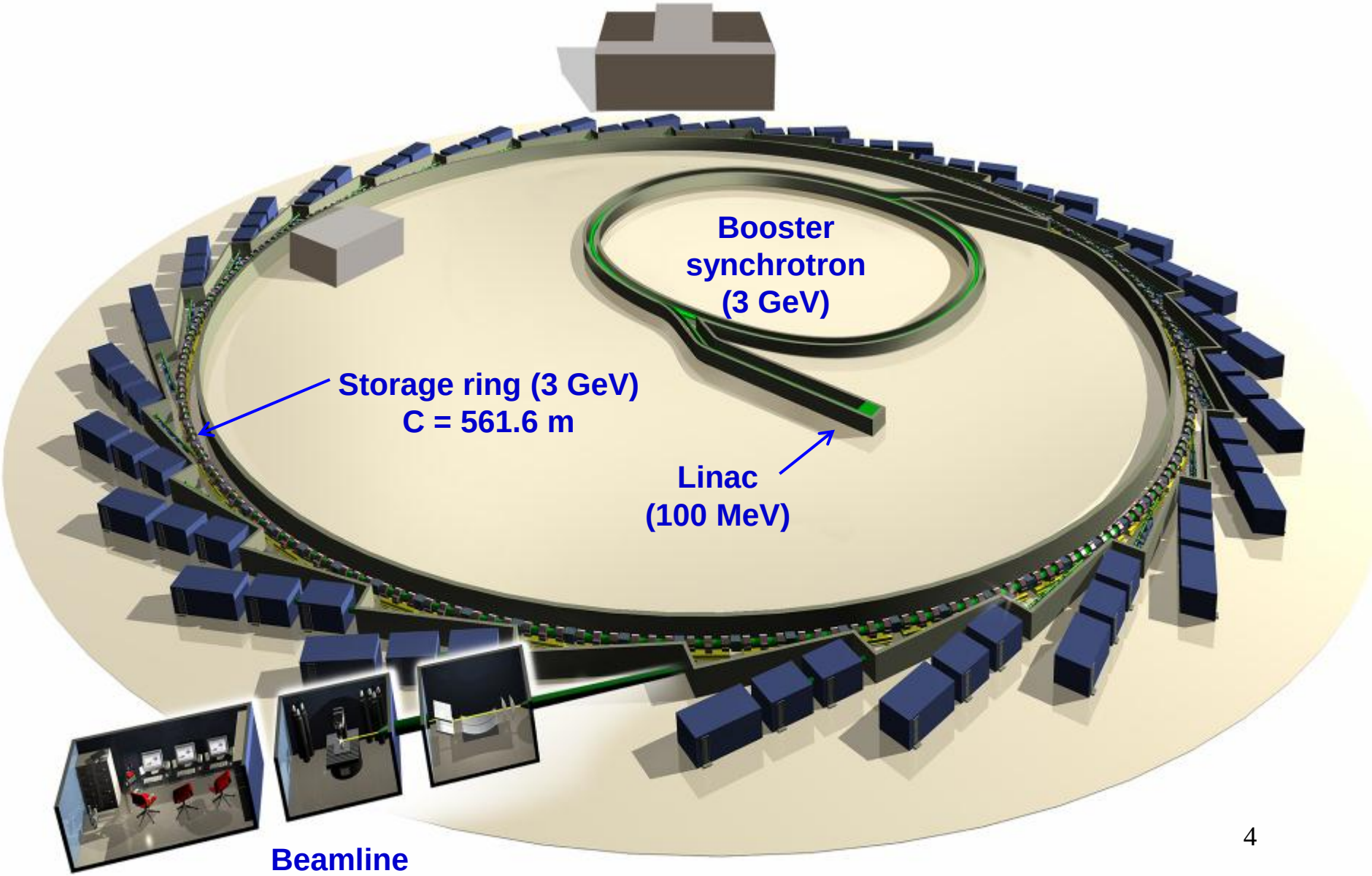

Diamond Storage Ring

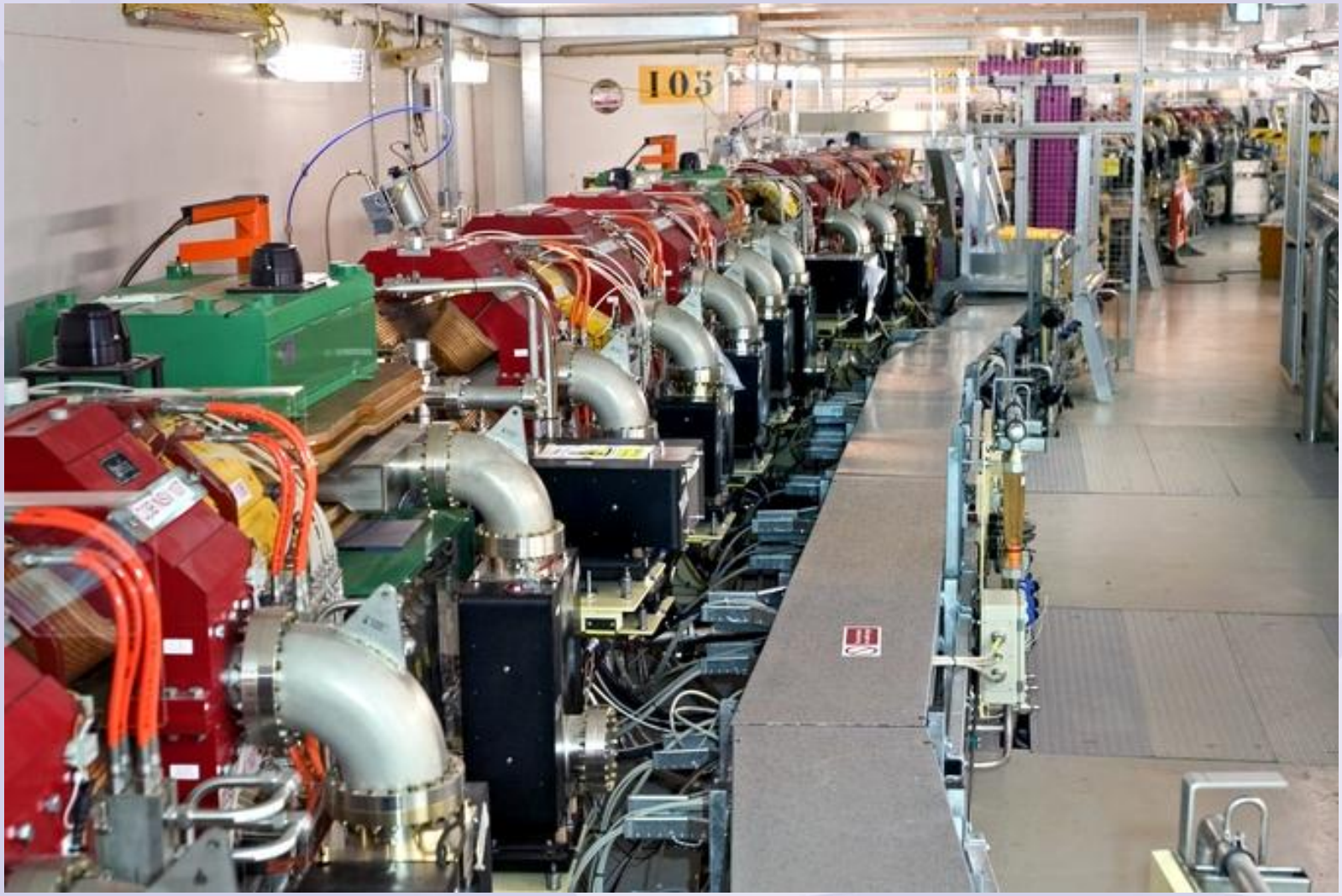

What is DDBA?

DDBA = Double Double Bend Achromat

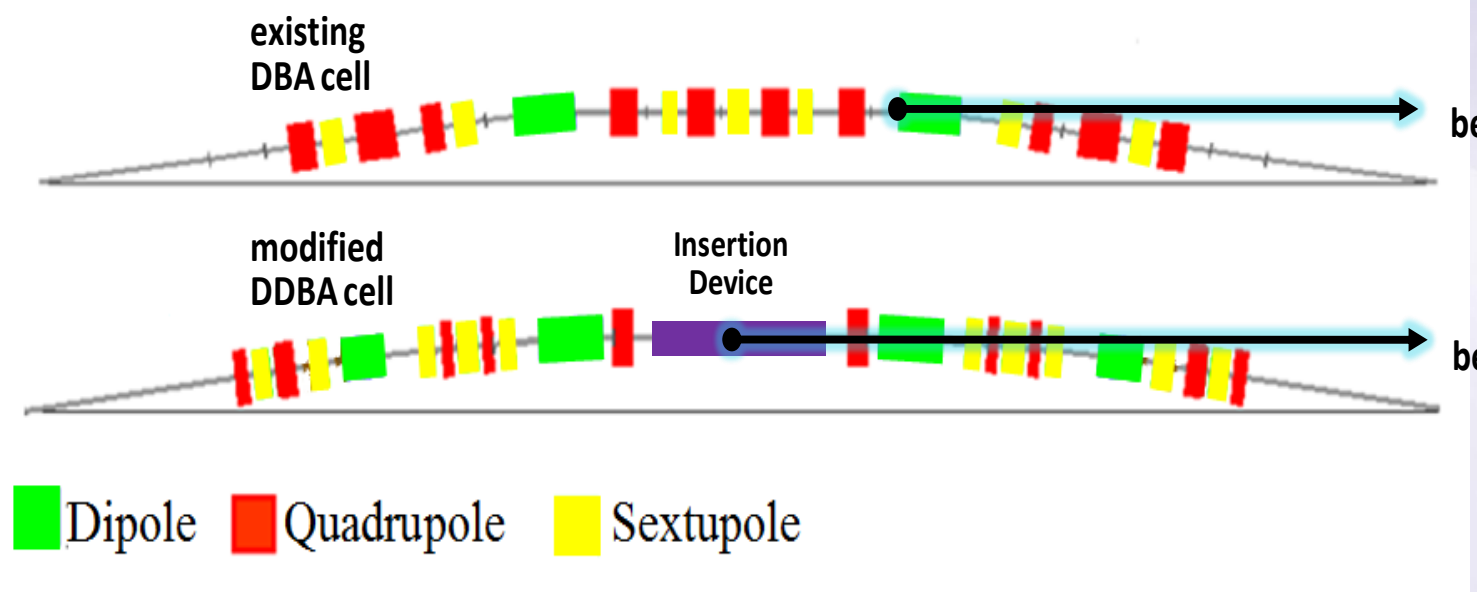

In a Double Bend Achromat the beamlines alternate ID1__BM1__ID2__BM2__ID3, etc up to ID24 with emittance 2.7nmRad

Potentially with a Double Double Bend Achromat on a 4BA lattice ID1__ID2__ID3__ID4__ID5, etc up to ID48! And emittance 250pmRad…

What is DDBA?

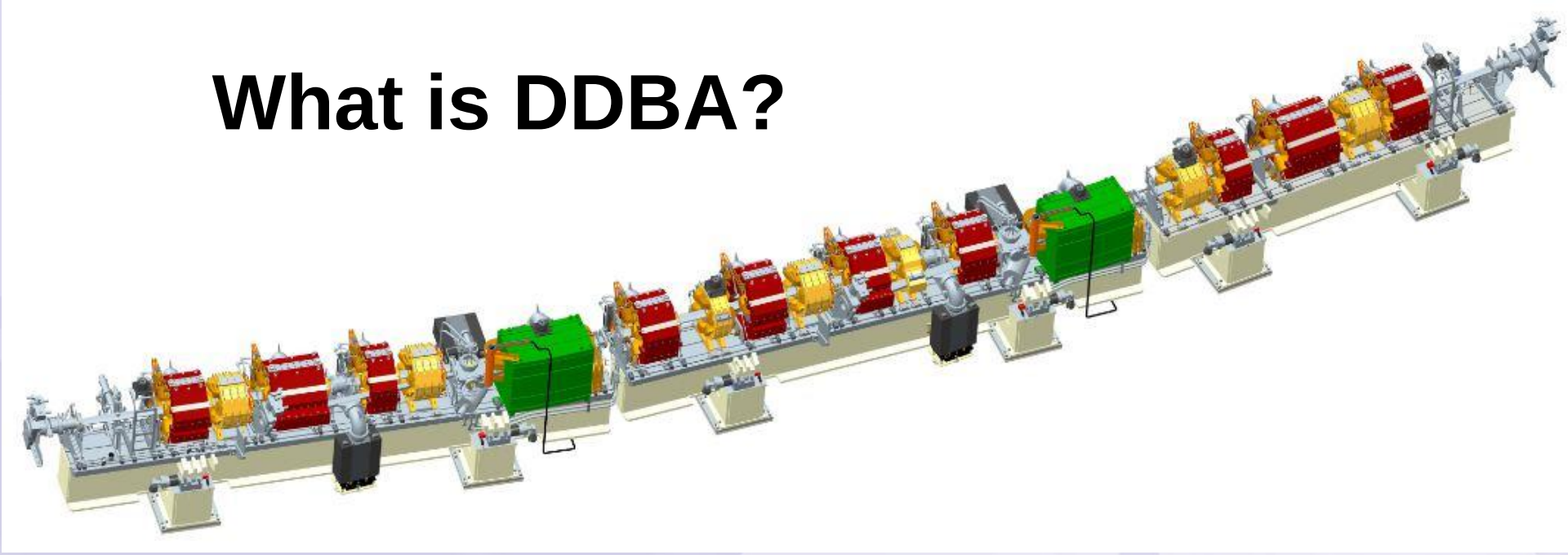

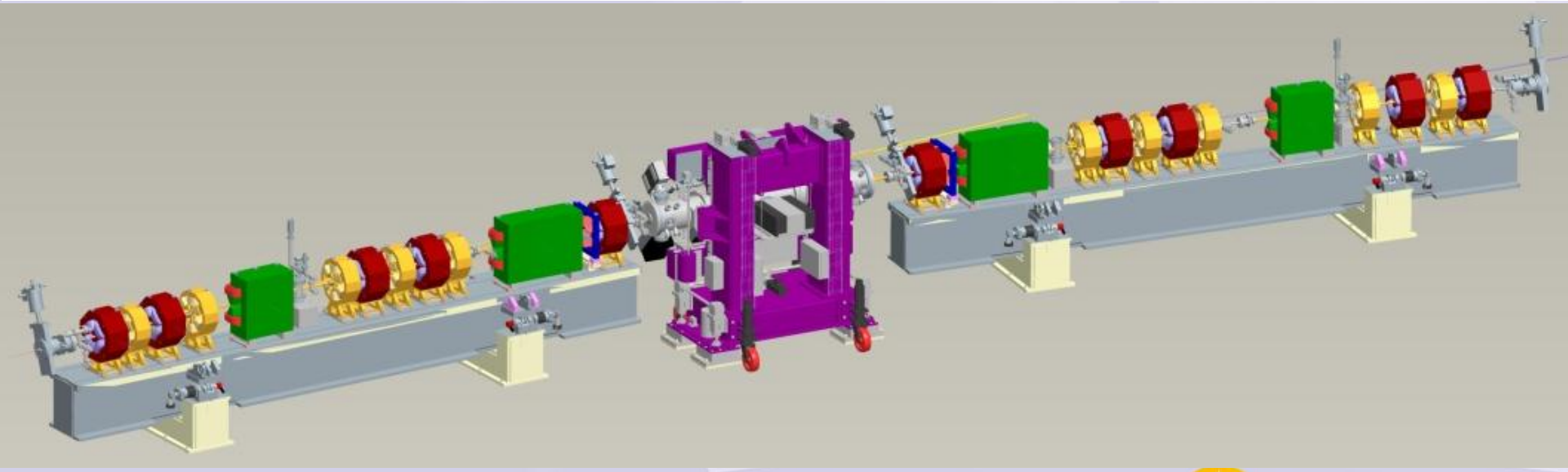

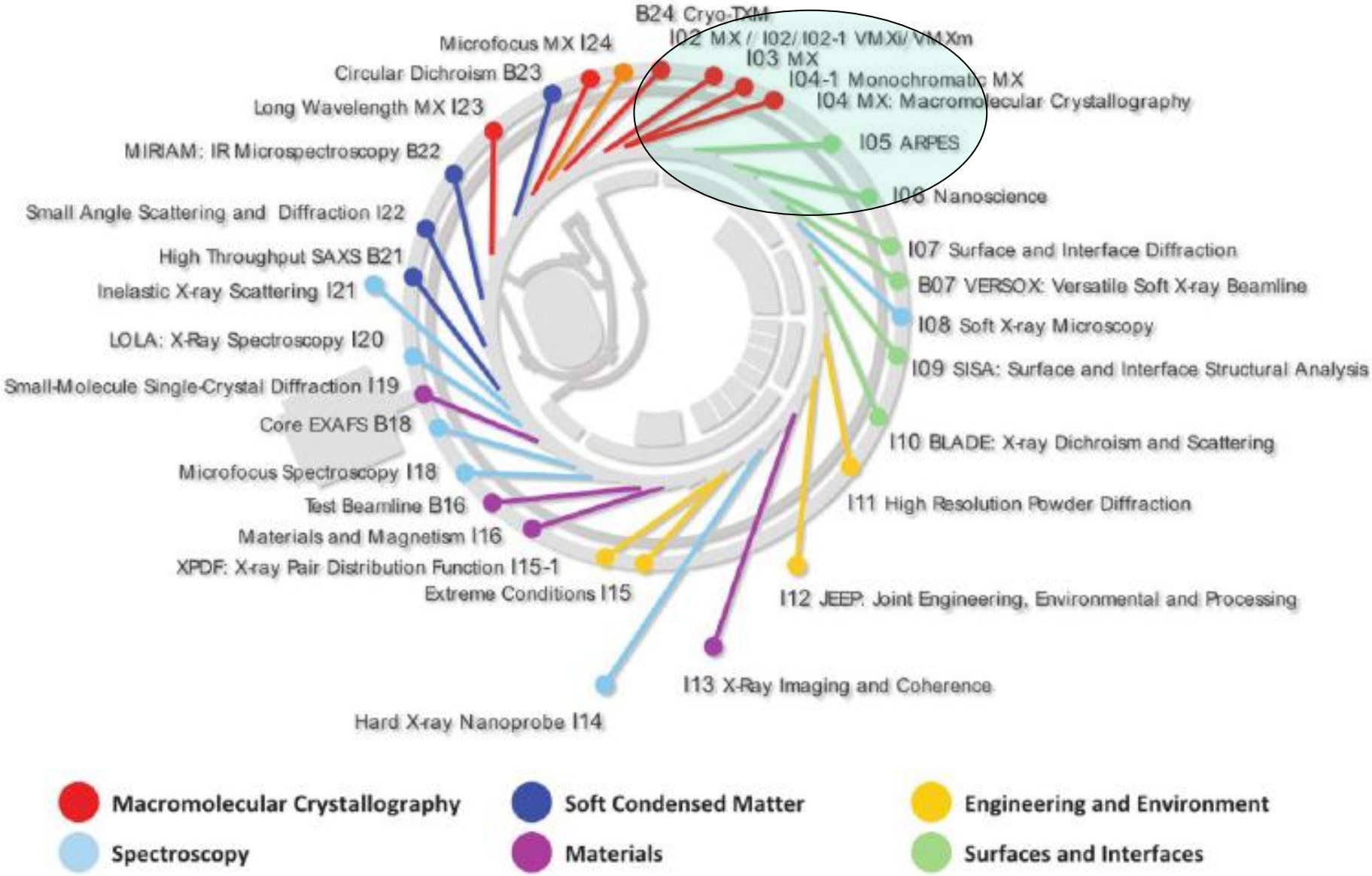
B24 Cryo-TXM
I02 MX / I02/ I02-1 VMXi/ VMXm
I03 MX
I04-1 Monochromatic MX
I04 MX: Macromolecular Crystallography
I05 ARPES
I06 Nanoscience
I07 Surface and Interface Diffraction
B07 VERSOX: Versatile Soft X-ray Beamline
I08 Soft X-ray Microscopy
I09 SISA: Surface and Interface Structural Analysis
I10 BLADE: X-ray Dichroism and Scattering
I11 High Resolution Powder Diffraction
I12 JEEP: Joint Engineering, Environmental and Processing
I13 X-Ray Imaging and Coherence
Hard X-ray Nanoprobe I14
Extreme Conditions I15
XPDF: X-ray Pair Distribution Function I15-1
Materials and Magnetism I16
Test Beamline B16
Microfocus Spectroscopy I18
Core EXAFS B18
Small-Molecule Single-Crystal Diffraction I19
LOLA: X-Ray Spectroscopy I20
Inelastic X-ray Scattering I21
High Throughput SAXS B21
Small Angle Scattering and Diffraction I22
MIRIAM: IR Microspectroscopy B22
Long Wavelength MX I23
Circular Dichroism B23
Microfocus MX I24
Macromolecular Crystallography
Soft Condensed Matter
Engineering and Environment
Spectroscopy
Materials
Surfaces and Interfaces

Magnets

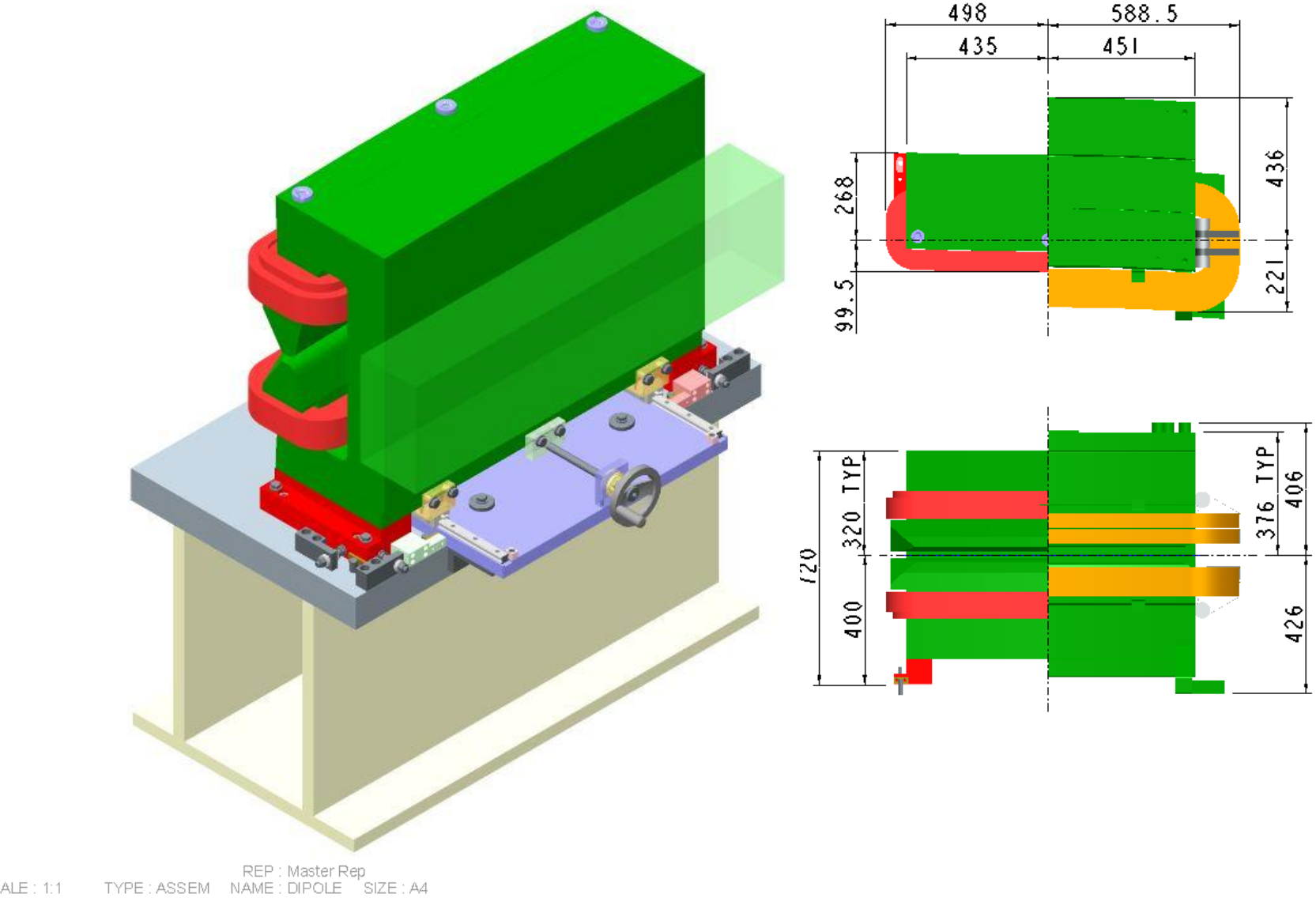

Combined function dipole 0.8T and quadrupole
Pole gap 30mm

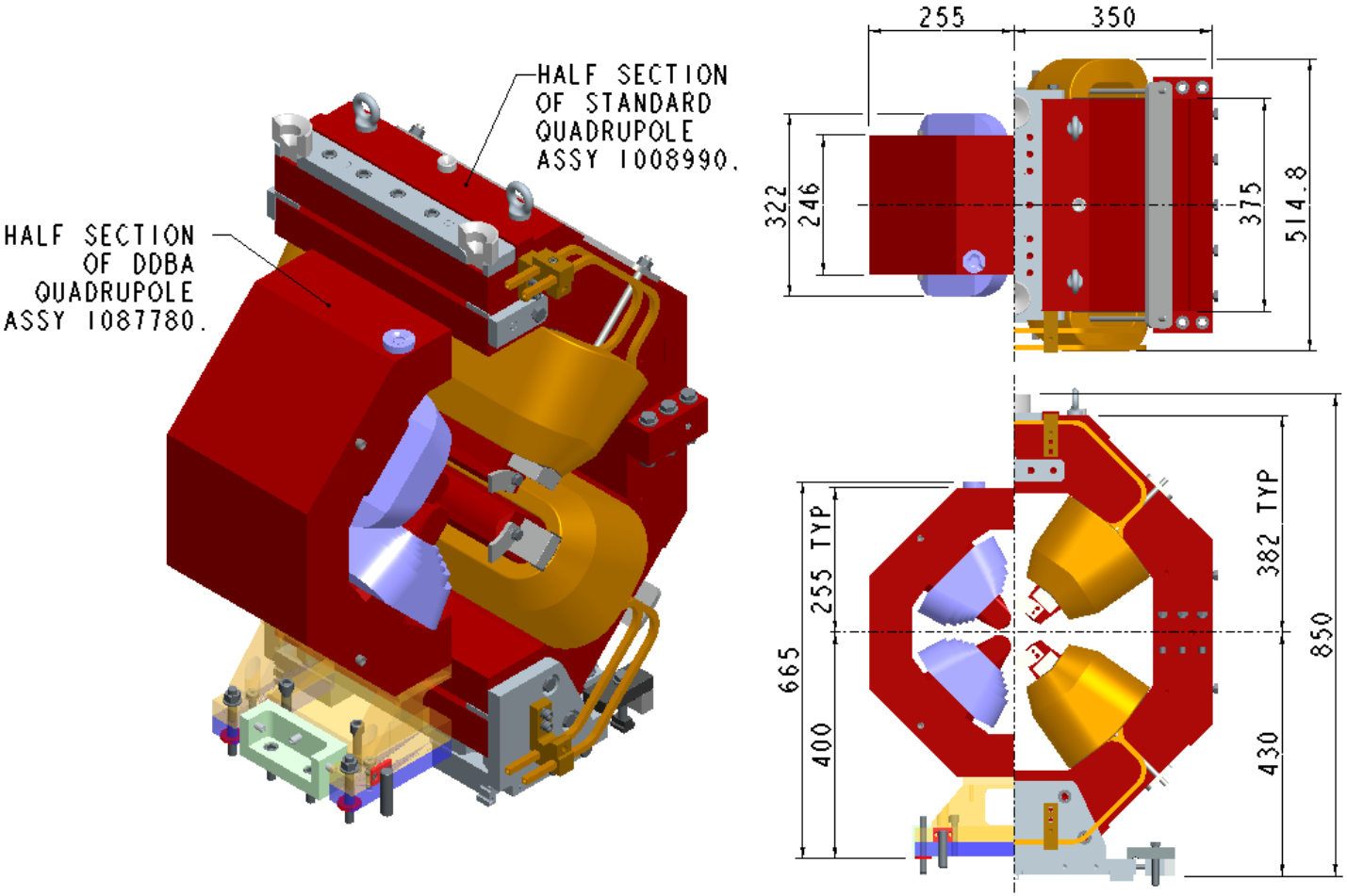

REP : Master Rep
SCALE : 1.000 TYPE : ASSEM NAME : QUAD SIZE : A4

Quadrupole field 70T/m
Inscribed radius 15mm

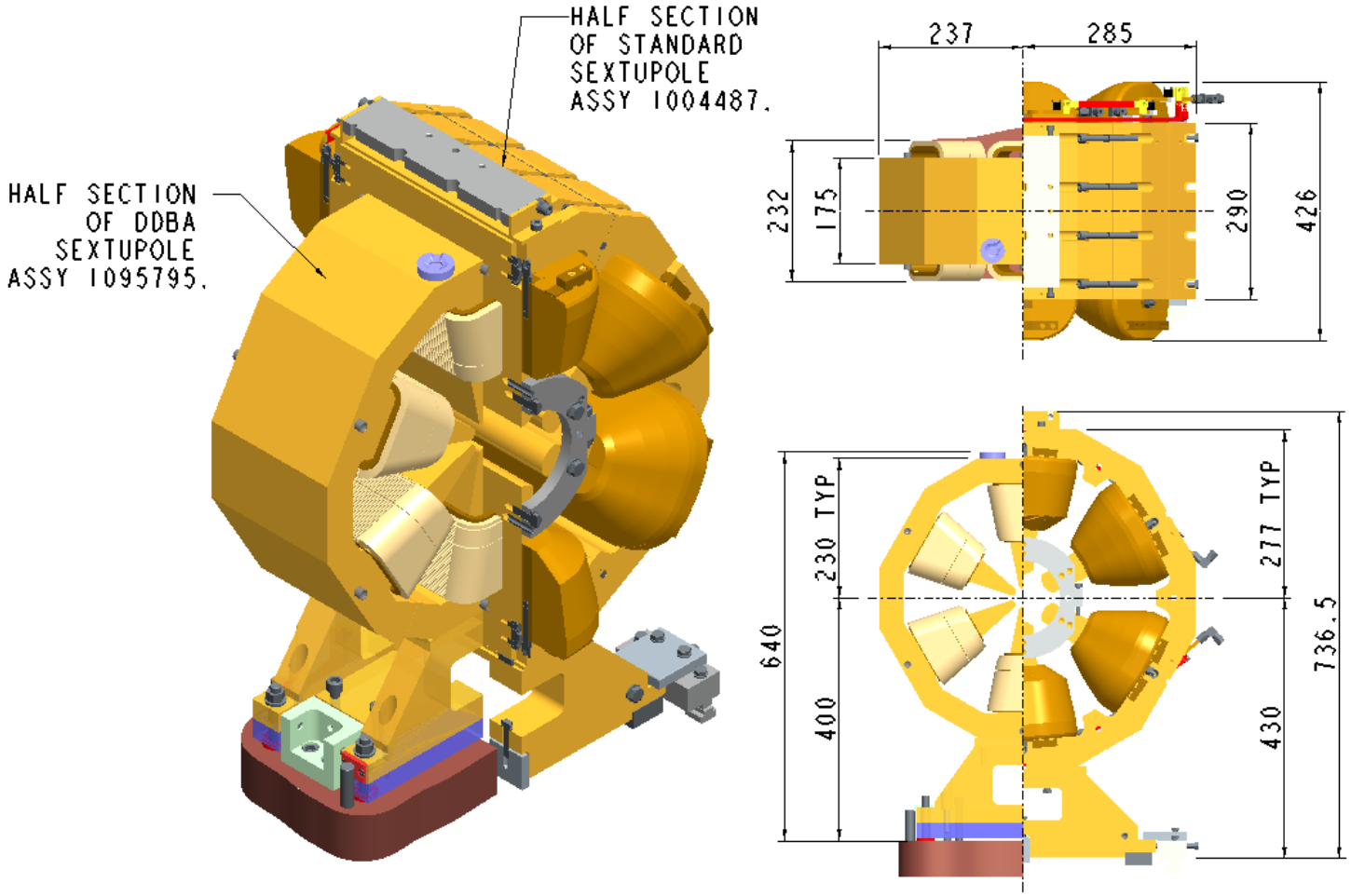

REP : Master Rep
SCALE : 1.000 TYPE : ASSEM NAME : SEXT SIZE : A4

Sextupole field 2000T/m2
Plus AC corrector coil windings
Inscribed radius 15mm

Magnet measurement

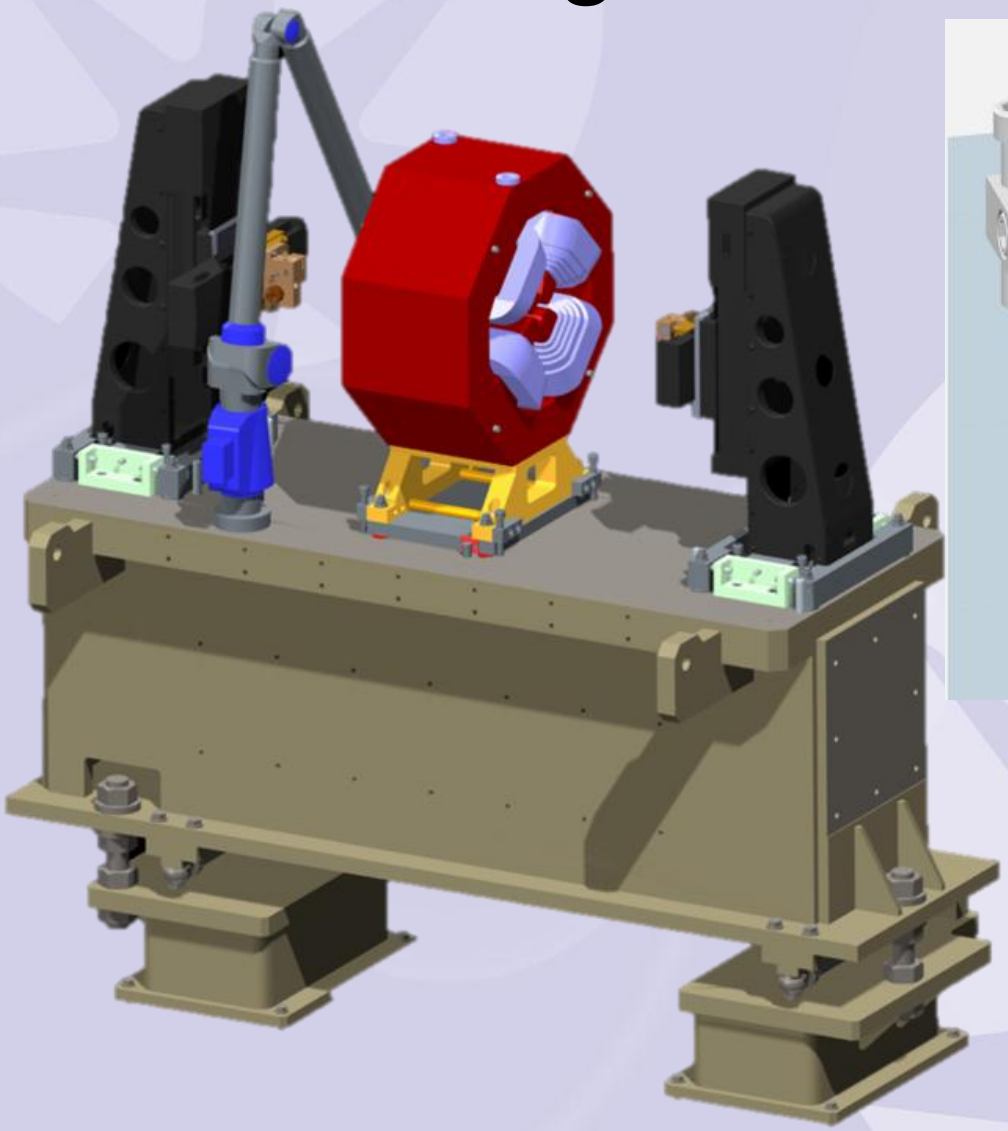

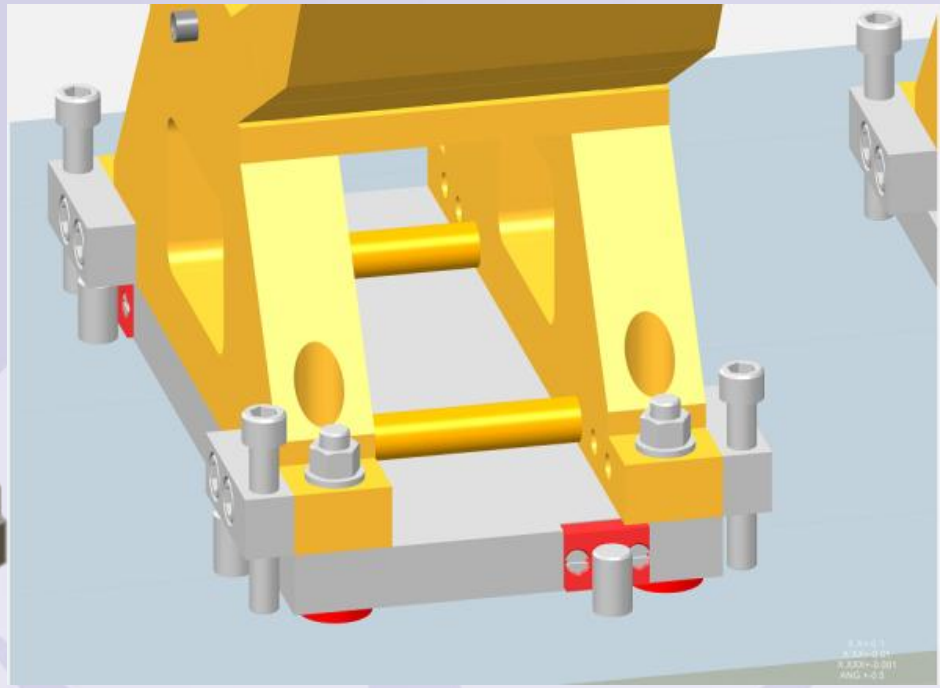

Transverse **Range** **Dipole** **Multipoles** **Resolution**	 **±2mm** **±1mm** **±10µm**
Vertical **Range** **Resolution**	 ±1mm ±10µm
Roll **Range** **Resolution**	 ±4mrad ±40µrad

Magnet measurement

Alignment towers in place for central group

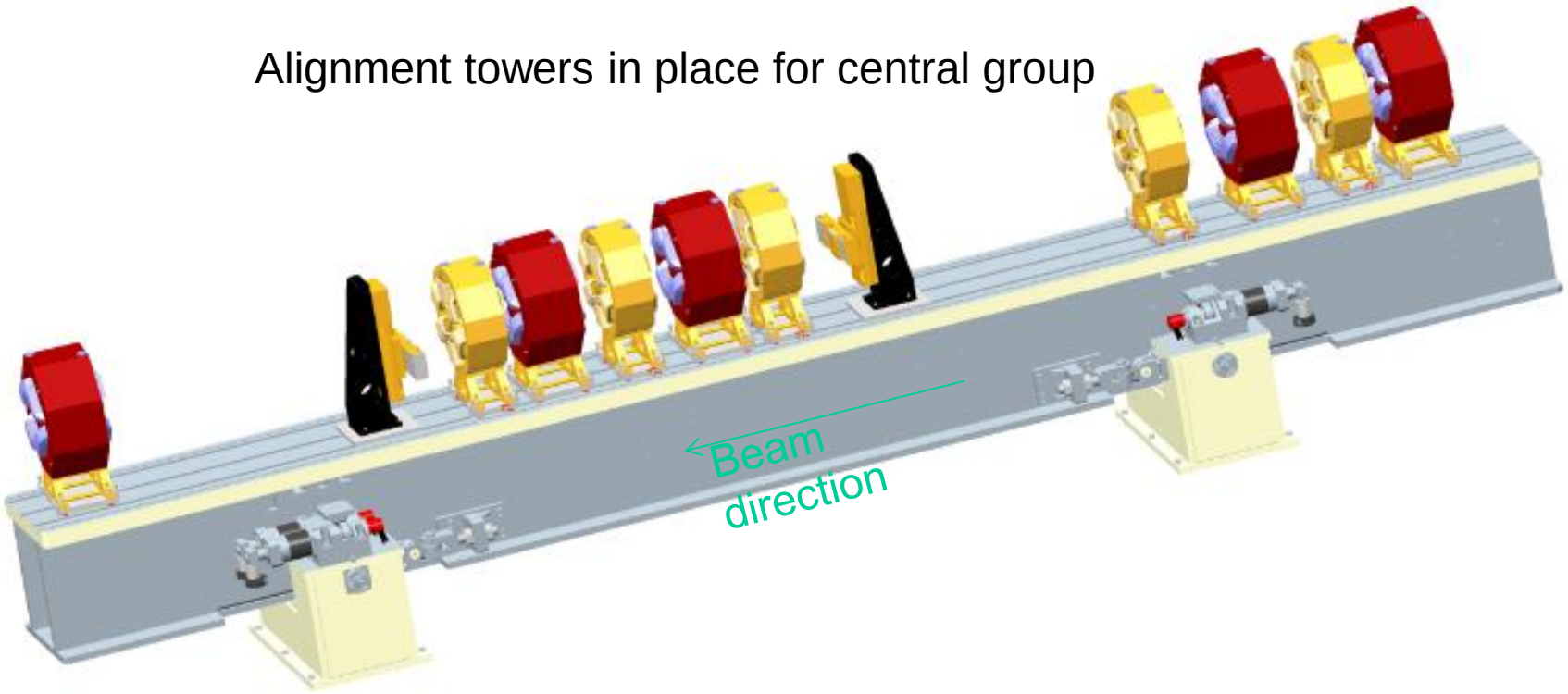

Girder assembly

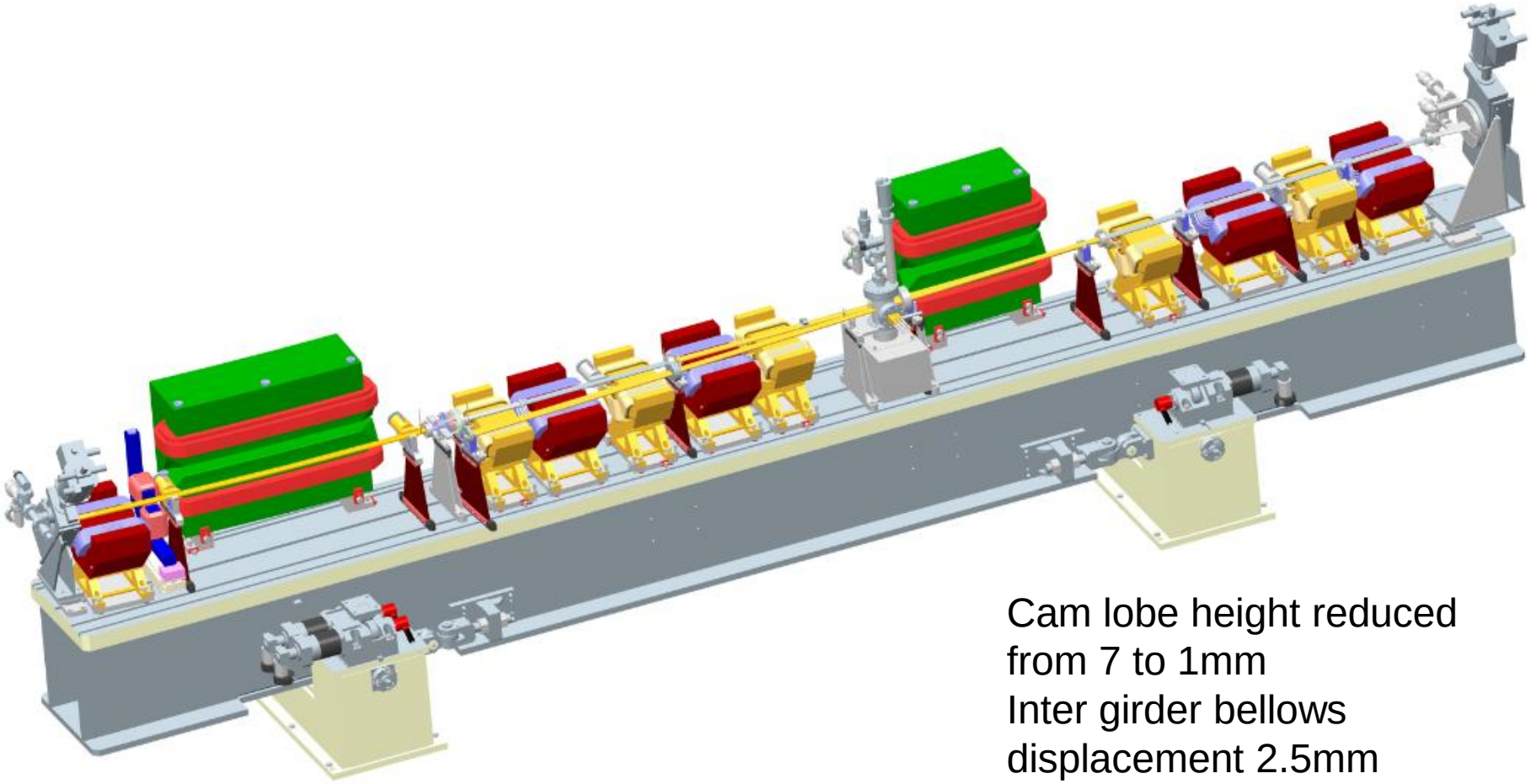

Cam lobe height reduced from 7 to 1mm
Inter girder bellows displacement 2.5mm

Girders

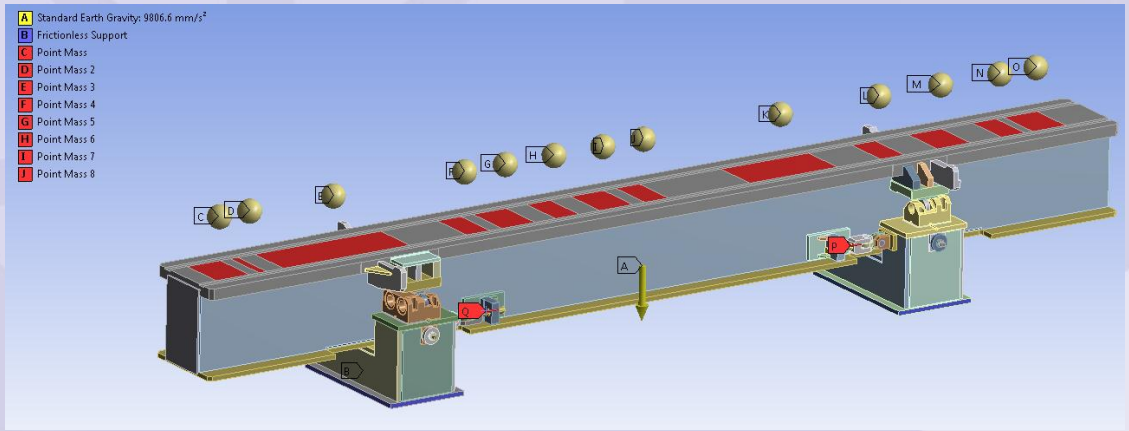

- Girder – 5216 Kg
- Quads – 384 Kg
- Sext – 253 Kg
- D1 – 1535 Kg
- D2 – 1154 Kg
- Corrector – 45 Kg
- TOTAL model – 8587 Kg
- Vessels ~ 1500Kg
- Total ~ 10,000Kg over 7.5m

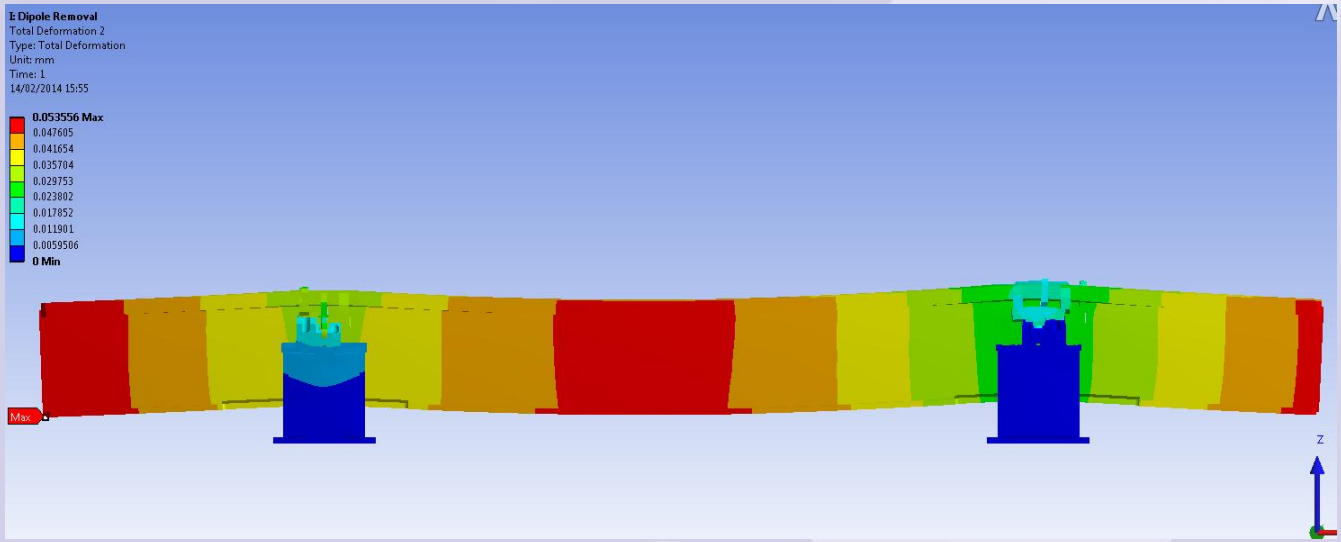

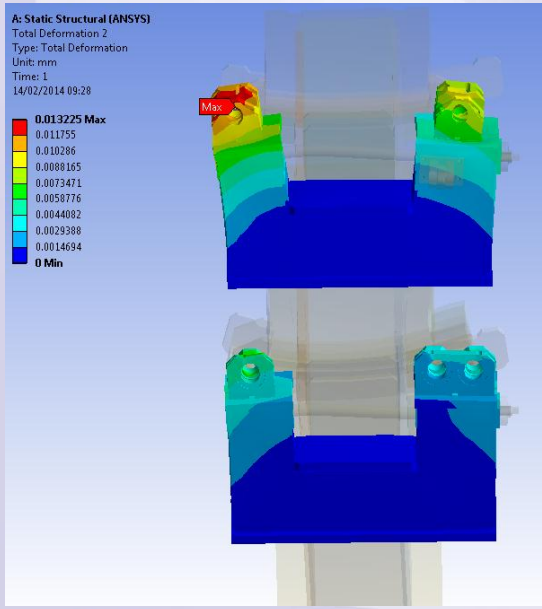

Max static deflection 54 microns including pedestal
20 microns girder surface corrected in machining

Girders

Analysis of girder deflection with and without each dipole magnet

Slope through groups of multipole magnets does not change significantly during magnet measurement

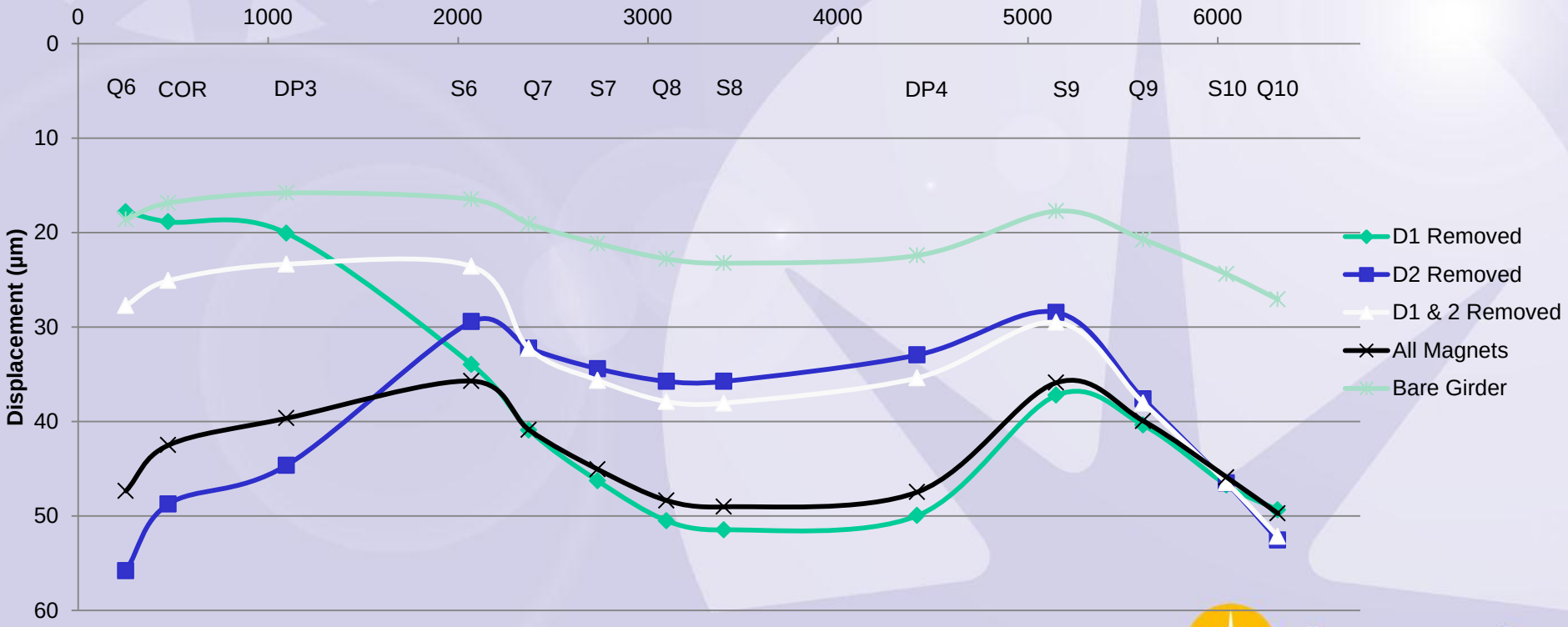

Girder vibration

23.4Hz rigid girder rocking

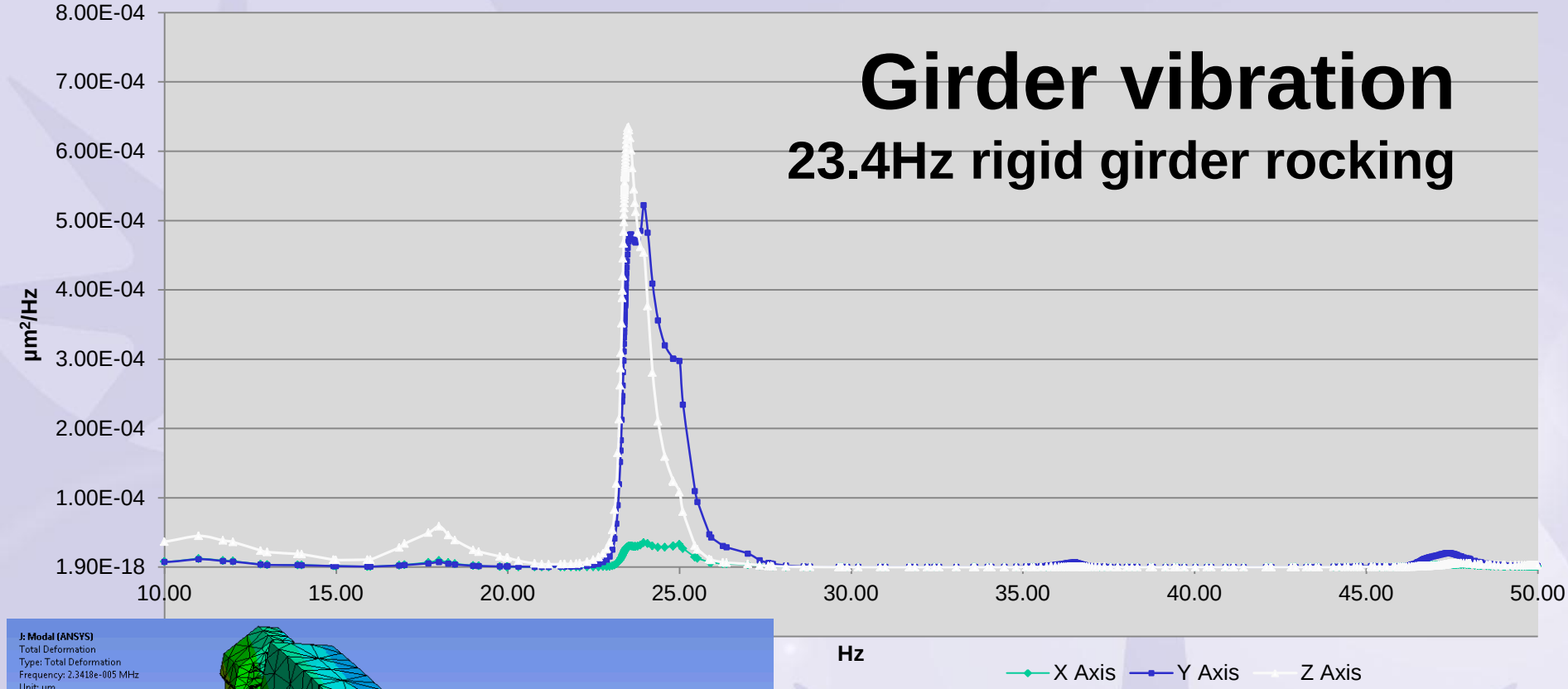

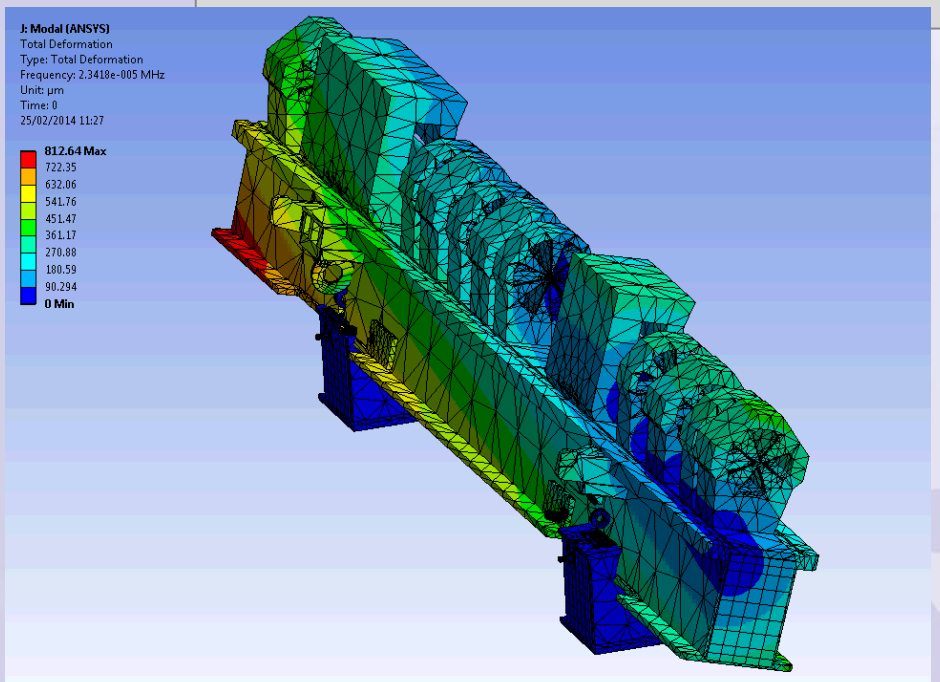

	S8 Magnet (nm)		
	X	Y	Z
1 Sigma (68.3%)	7.47	27.79	33.42
2 Sigma (95.95%)	14.95	55.58	66.842
3 Sigma (99.74%)	22.43	83.37	100.26

diamond

Vacuum Vessels

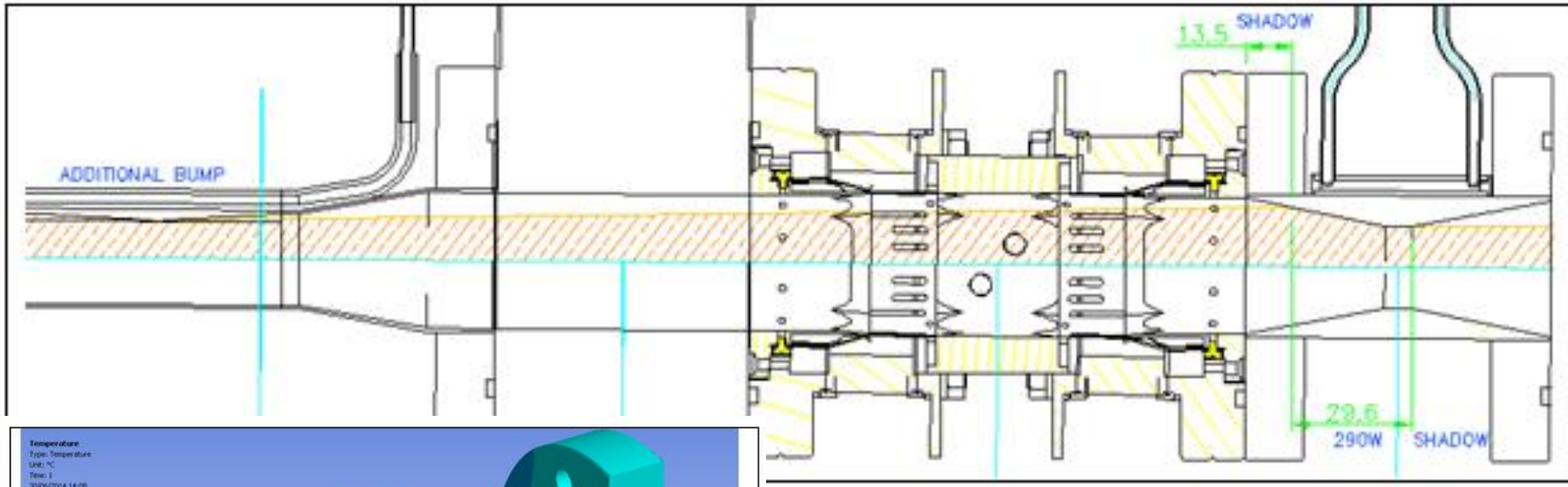

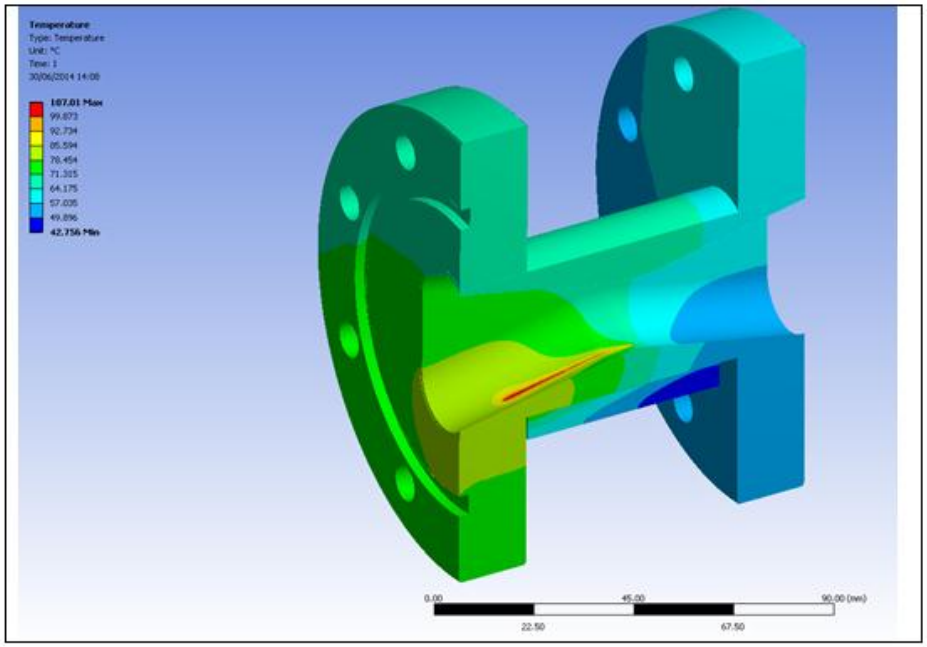

Figure 105: Temperature contours. Tmax=107°C

STRESS 52mPA

Bump and crotch finger Beam Stay Clear is 11mm

Vacuum vessels

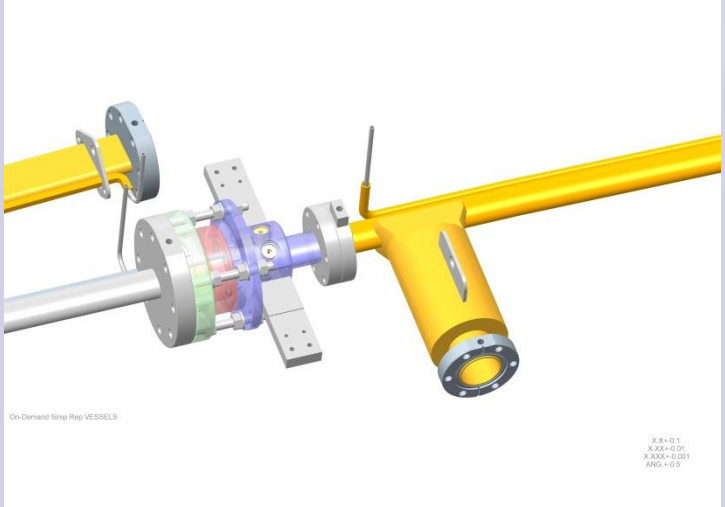

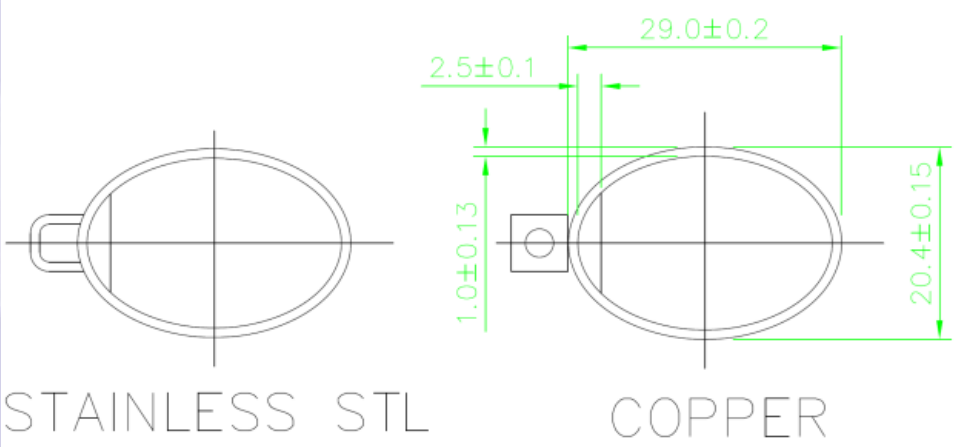

Vacuum vessels

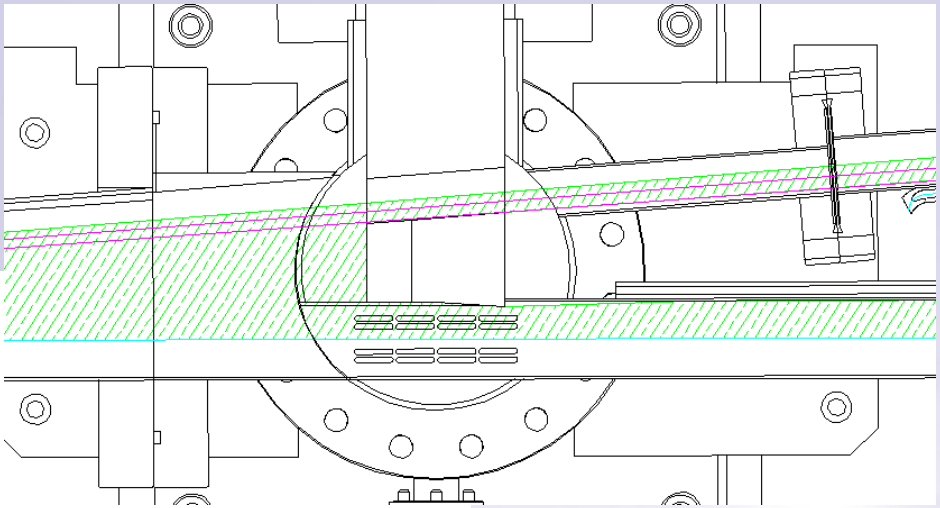

Dipole 3 Crotch absorber based on cooled finger

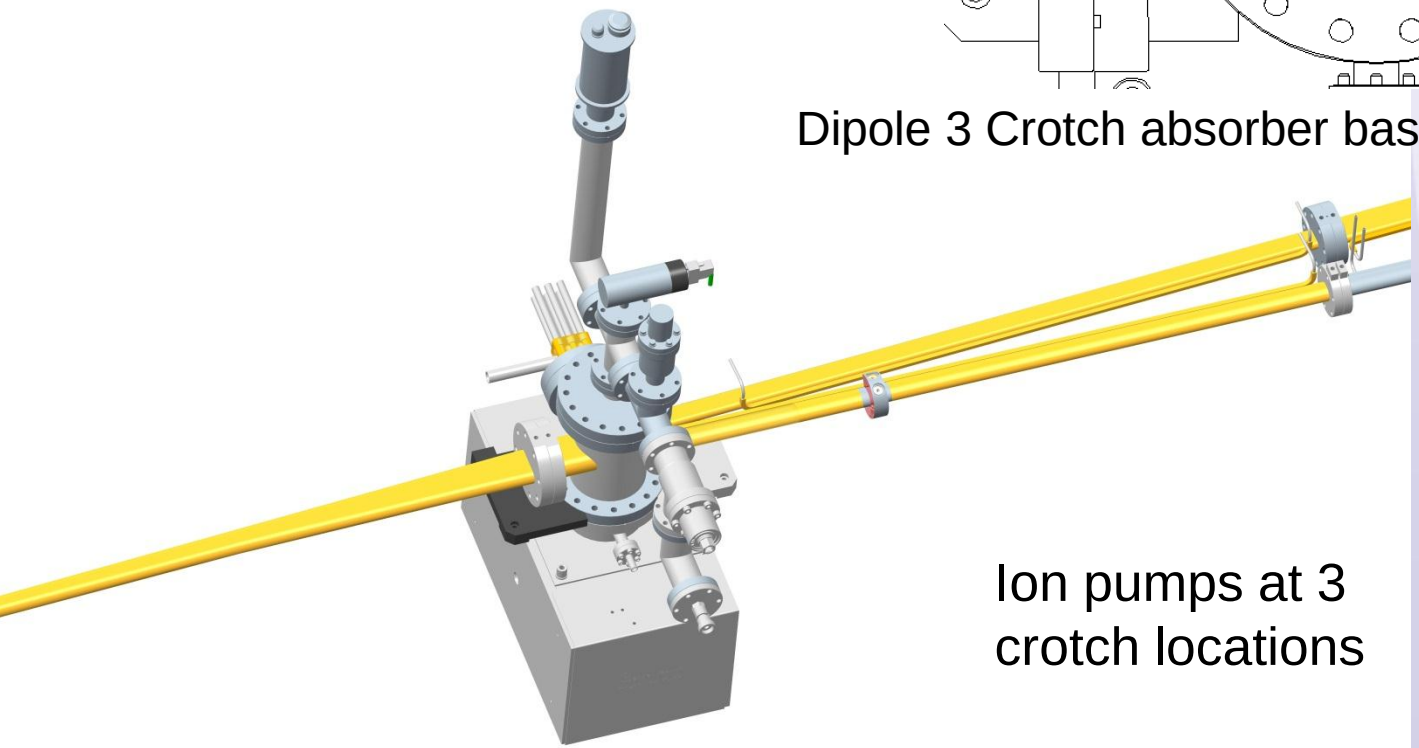

Ion pumps at 3 crotch locations

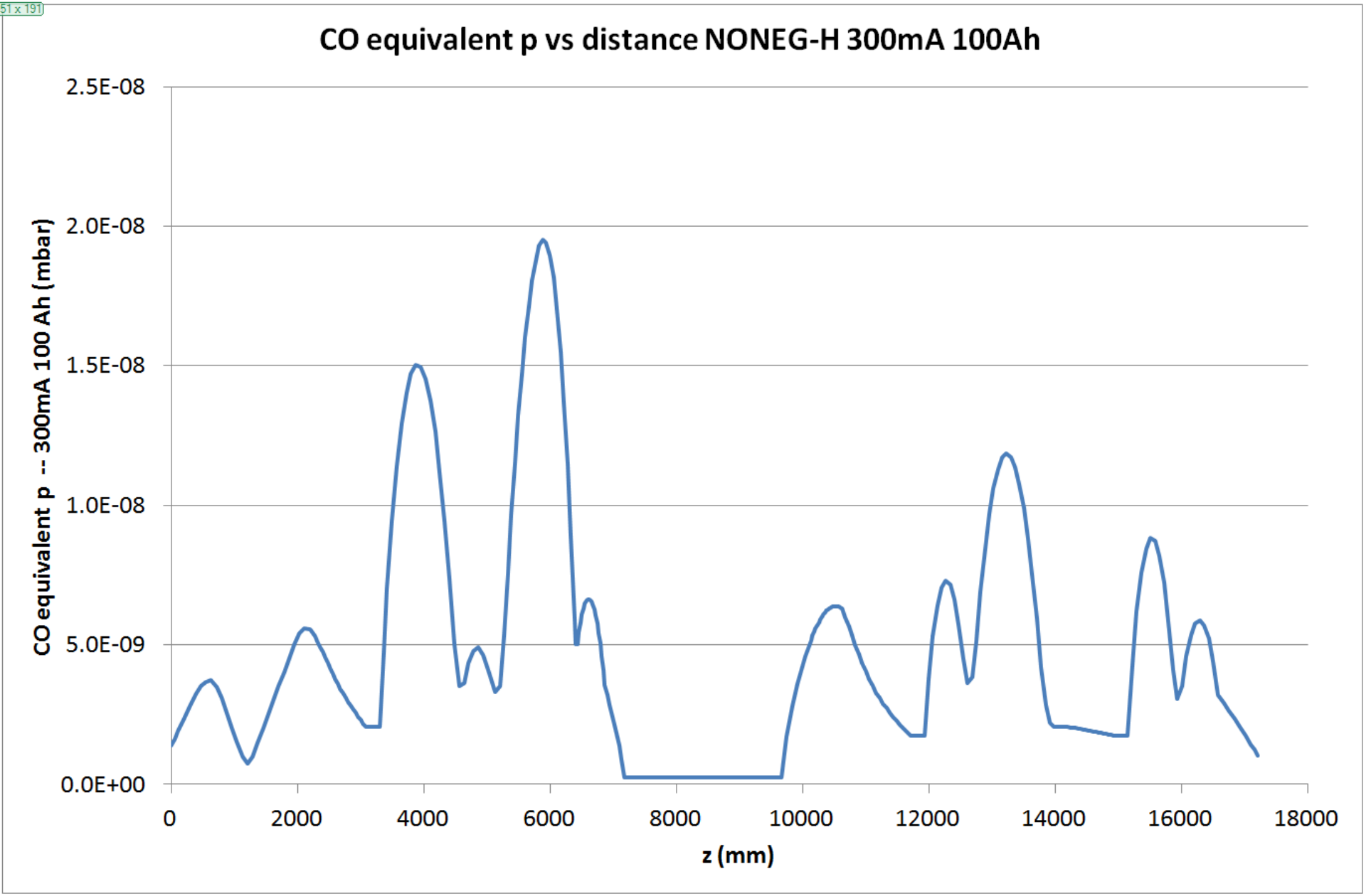
CO equivalent p vs distance NONEG-H 300mA 100Ah
CO equivalent p -- 300mA 100 Ah (mbar)
2.5E-08
2.0E-08
1.5E-08
1.0E-08
5.0E-09
0.0E+00
0
2000
4000
6000
8000
10000
12000
14000
16000
18000
z (mm)

Bake-out tests

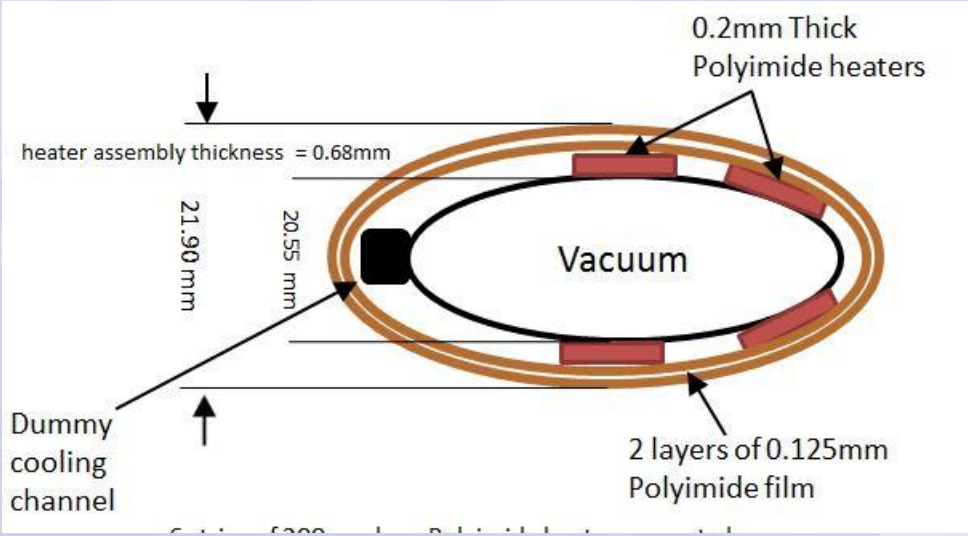

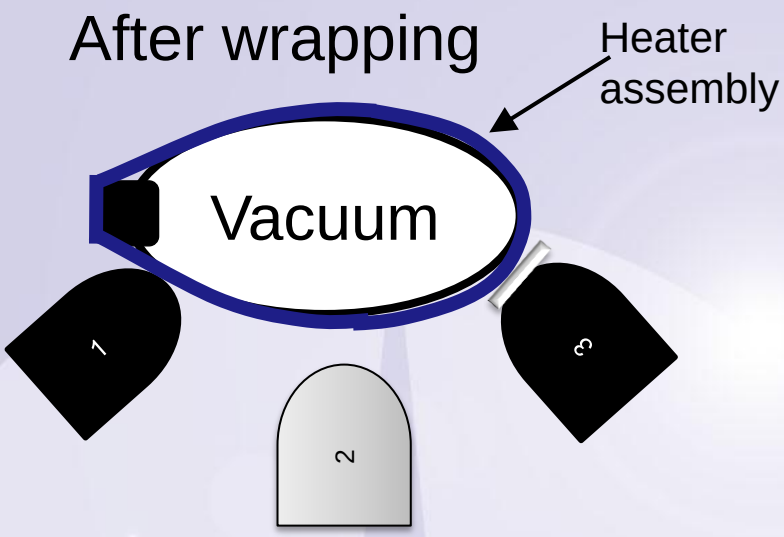

DDBA Test vessel heater wrap and pole clearance measurements

	Before wrapping	After wrapping
Sext Pole 1	1.90	0.00, ~0.20mm can be forced into the gap
Sext Pole 2	Not shimmed	Not measured
Sext Pole 3	1.90	>1.00
Quad Pole 1	2.70	>1.50
Quad Pole 3	2.70	>2.00

Vacuum flanges

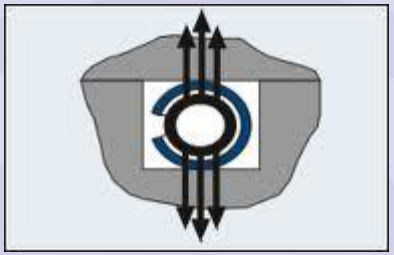

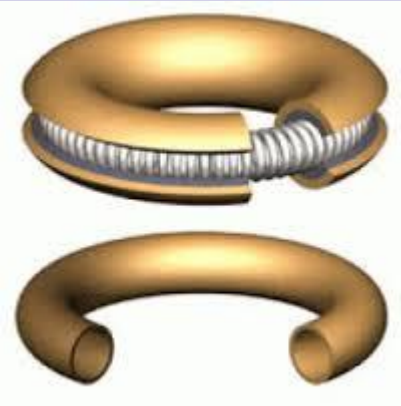

Helicoflex seal on every flange facing electron beam
Guarantees face to face flange sealing,

no flange gaps = no RF heating

All other flanges CF gasket

Control and Instrumentation Areas

- All control racks in air-conditioned rooms
- One CIA per cell

Control Instrumentation Area

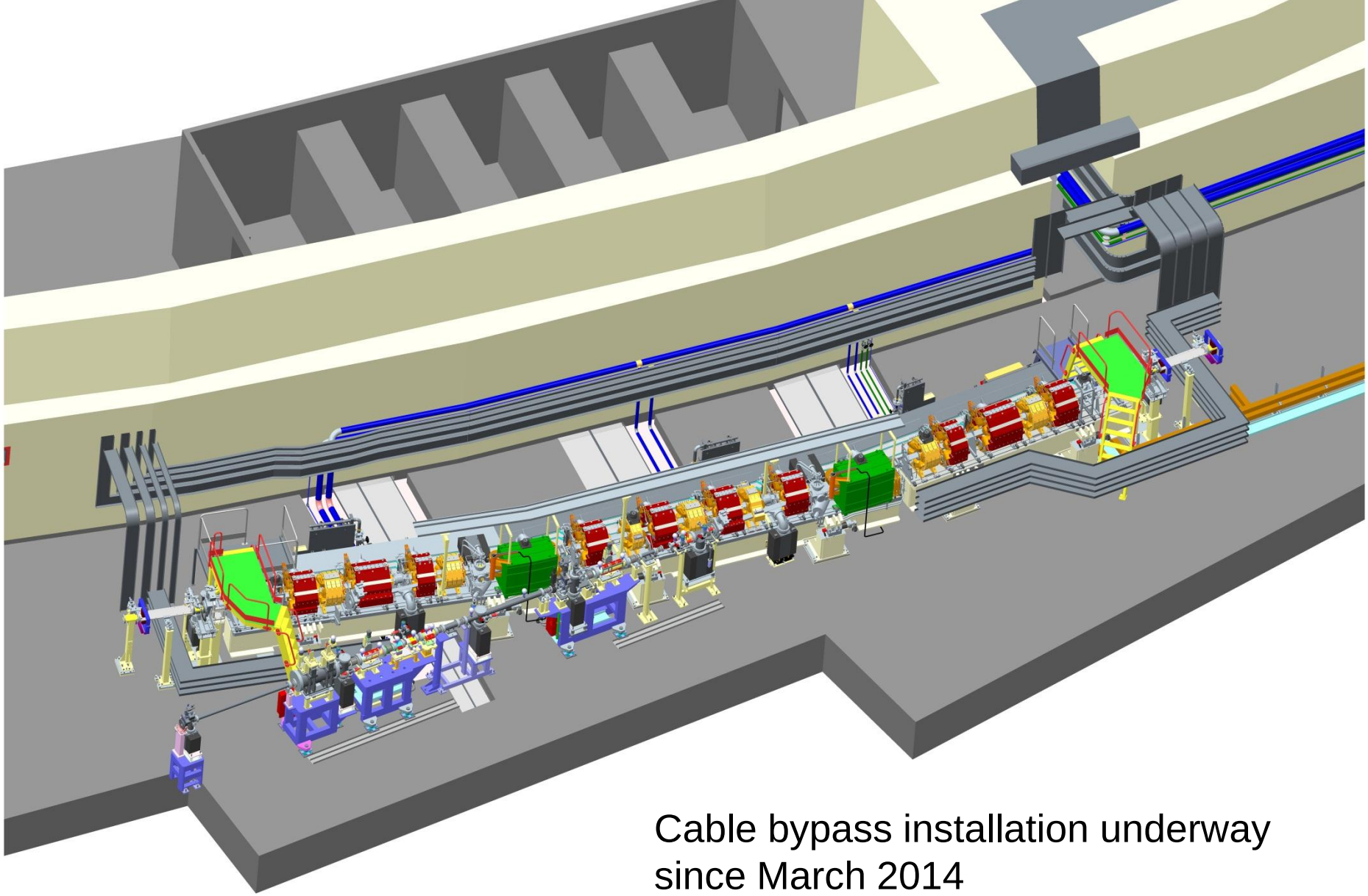

Cable bypass installation underway since March 2014
Reversible….just in case!

Conclusion

- DDBA project is well advanced with major contracts for magnets and vessels awarded and installation summer 2016
- DDBA is a great opportunity to develop technology and techniques for a low emittance, diffraction limited SR upgrade
- Acknowledgments Matthew Cox, Alan Day, Nigel Hammond, Roger Holdsworth, Houcheng Huang, Andrew Thomson, Paul Vivian, Sol Omalayo

diamond

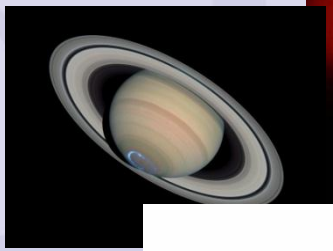

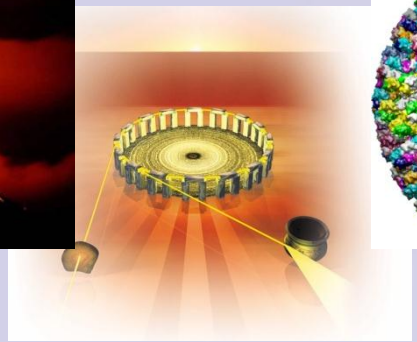
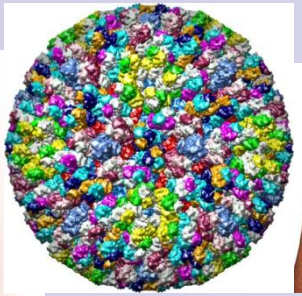
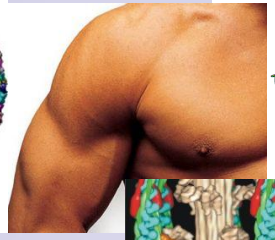
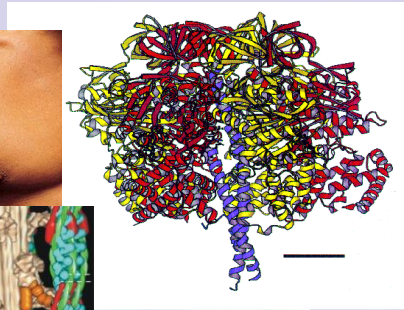

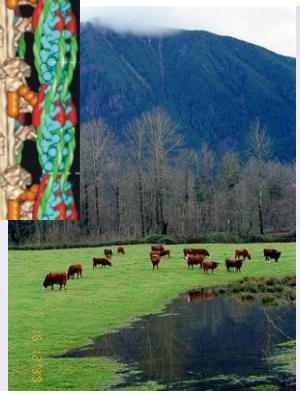
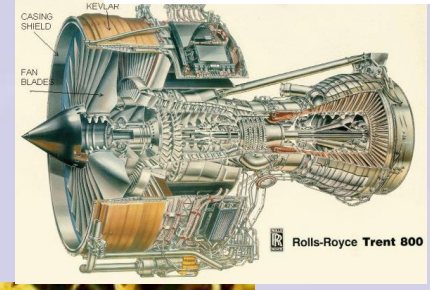
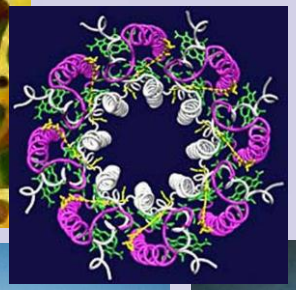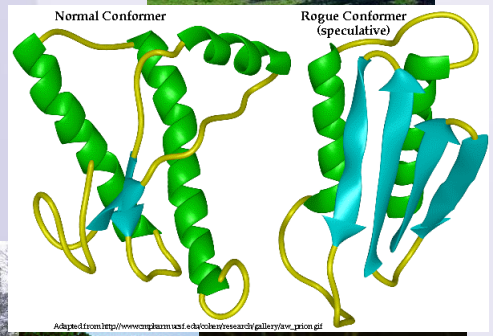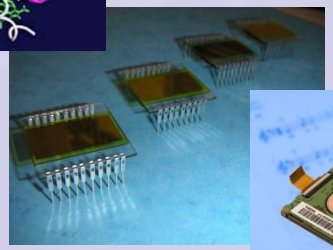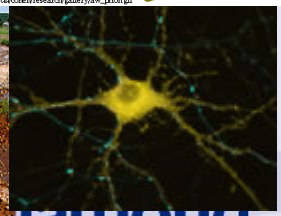
Thanks for your attention.
Any Questions?