New mechanics for the Coherent X-ray scattering endstation at BESSY

Tino Noll, Manuel Fohler, Durgamadhab Mishra, Jan Geilhufe, Dieter Engel, Peter Bischoff and Stefan Eisebitt

Institut für Optik und atomare Physik der TU-Berlin /

Helmholtz-Zentrum-Berlin für Materialien und Energie

Functionalities of the new endstation

- Dedicated coherent scattering chamber for users
- High flux beam line at UE 49 SGM
- Reflection, Transmission
- Microscopy, Scattering (static and dynamic (time, temperature, field etc))
- Holography, Ptychography, Coherent Diffraction Imaging, Tomo-holography…
- Retractable for using other endstations like solid state RICXS

Beamline

Schematic view of the beam line (not up to scale)

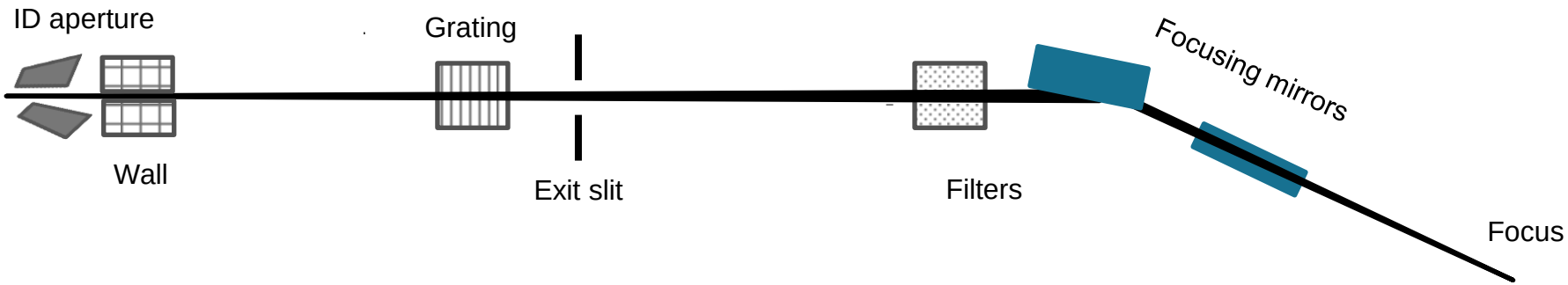

Design

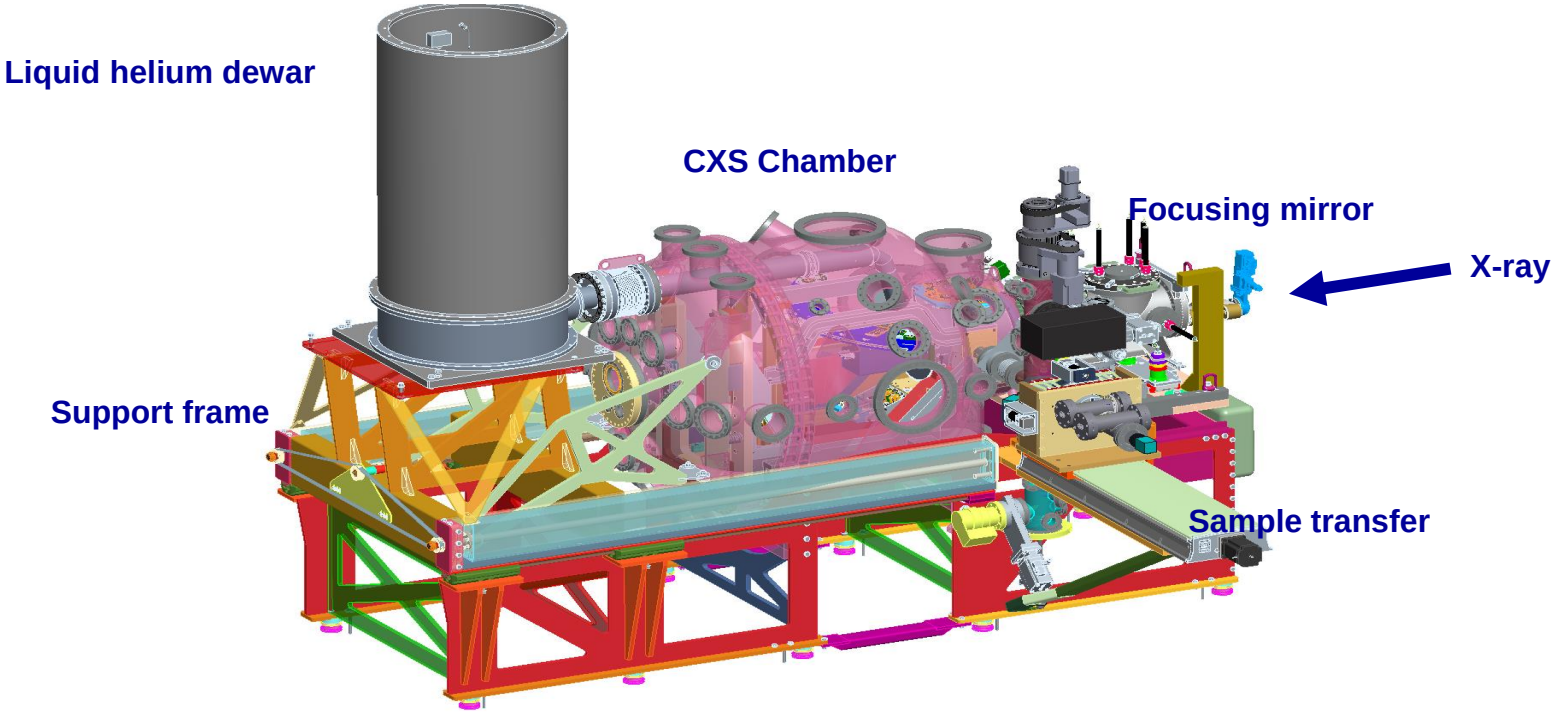
Liquid helium dewar
CXS Chamber
Focusing mirror
X-ray
Support frame
Sample transfer

The experiment patform at 1.6 m

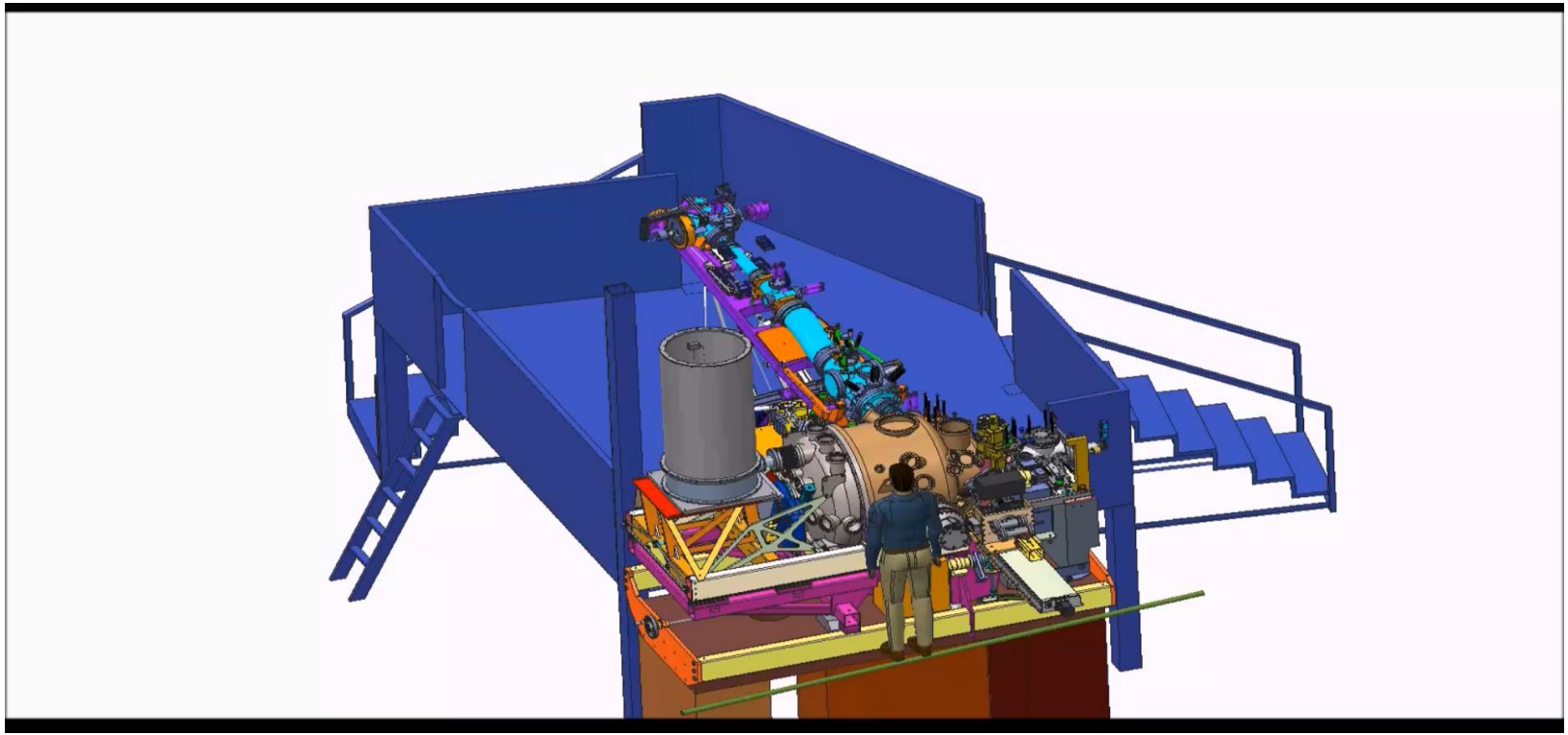

Opening and retracting the chamber

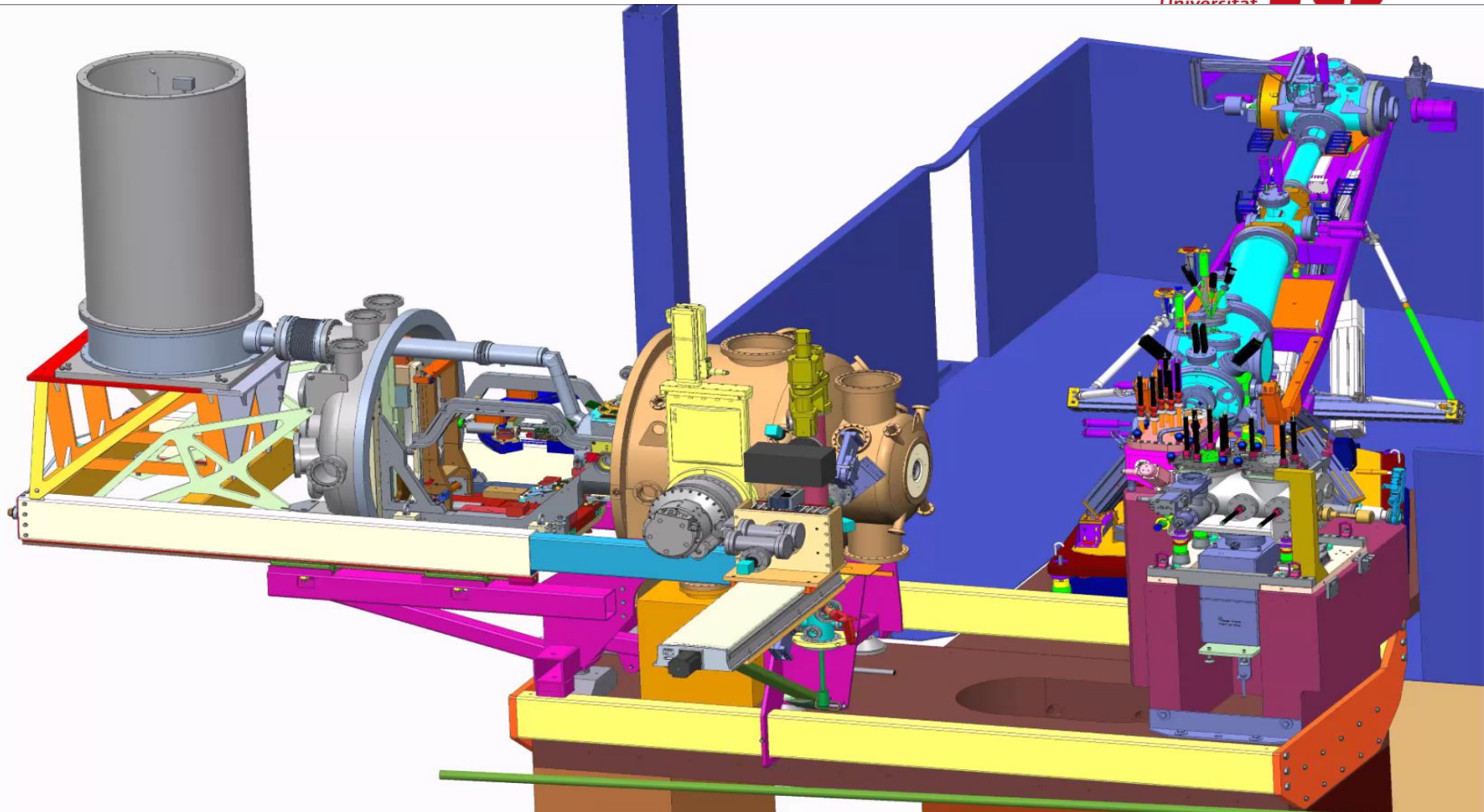

Scattering geometry

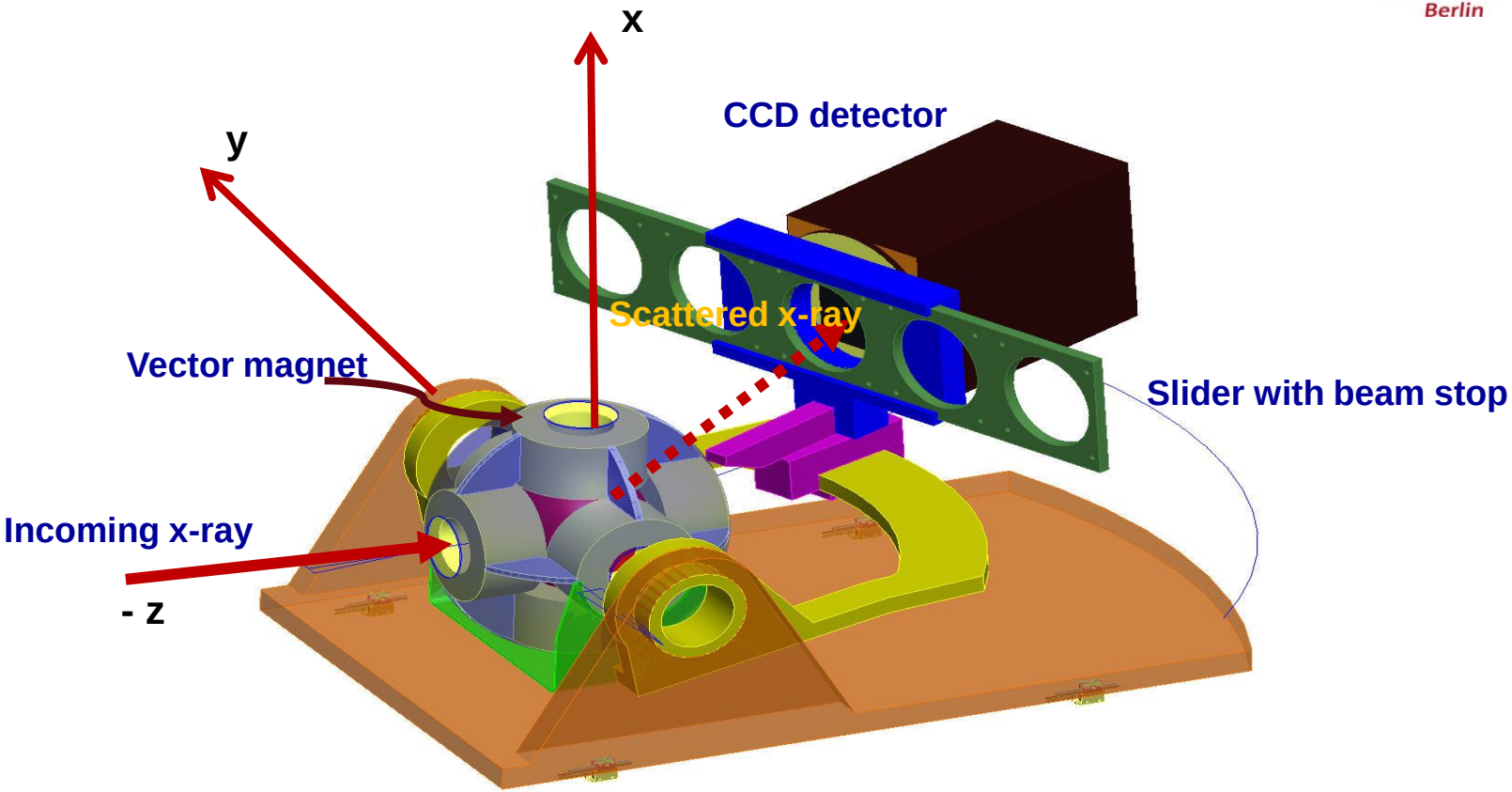

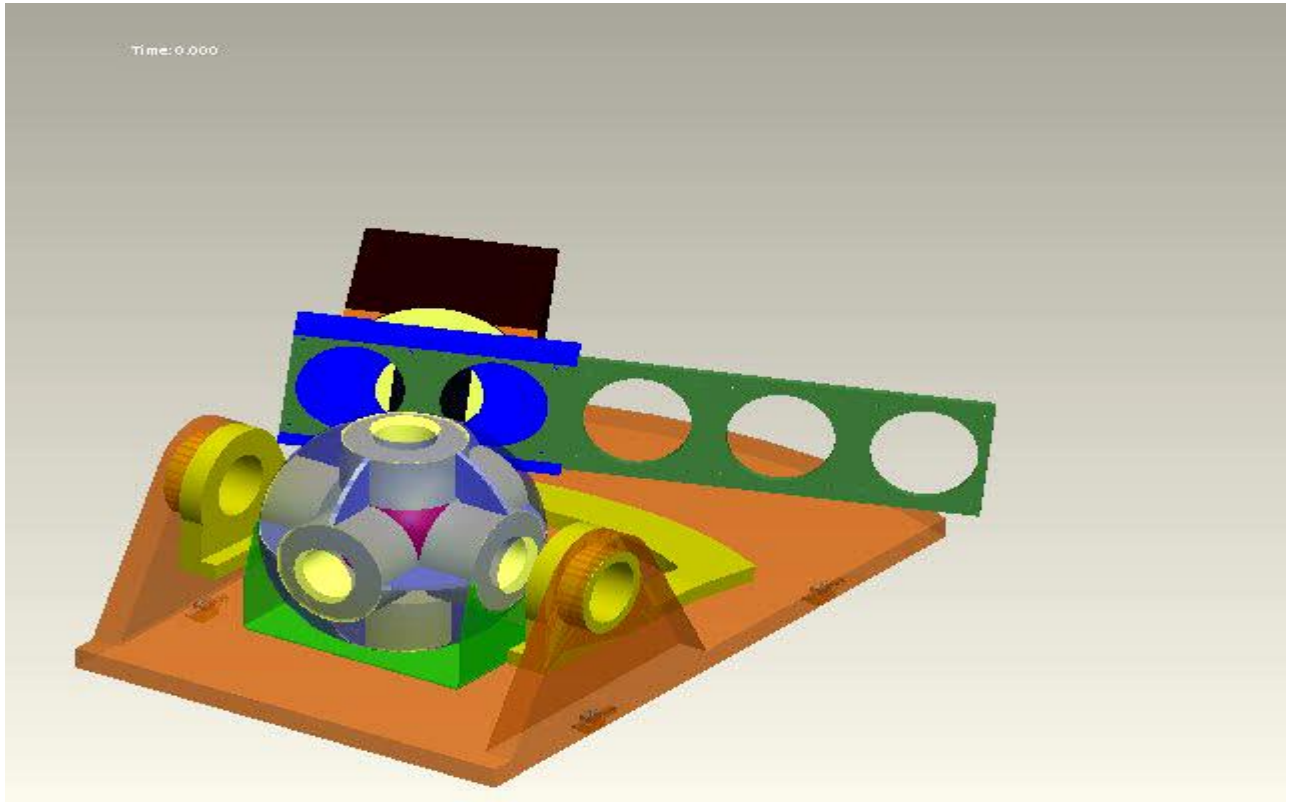
Time: 0.000

Inner mechanics without magnet

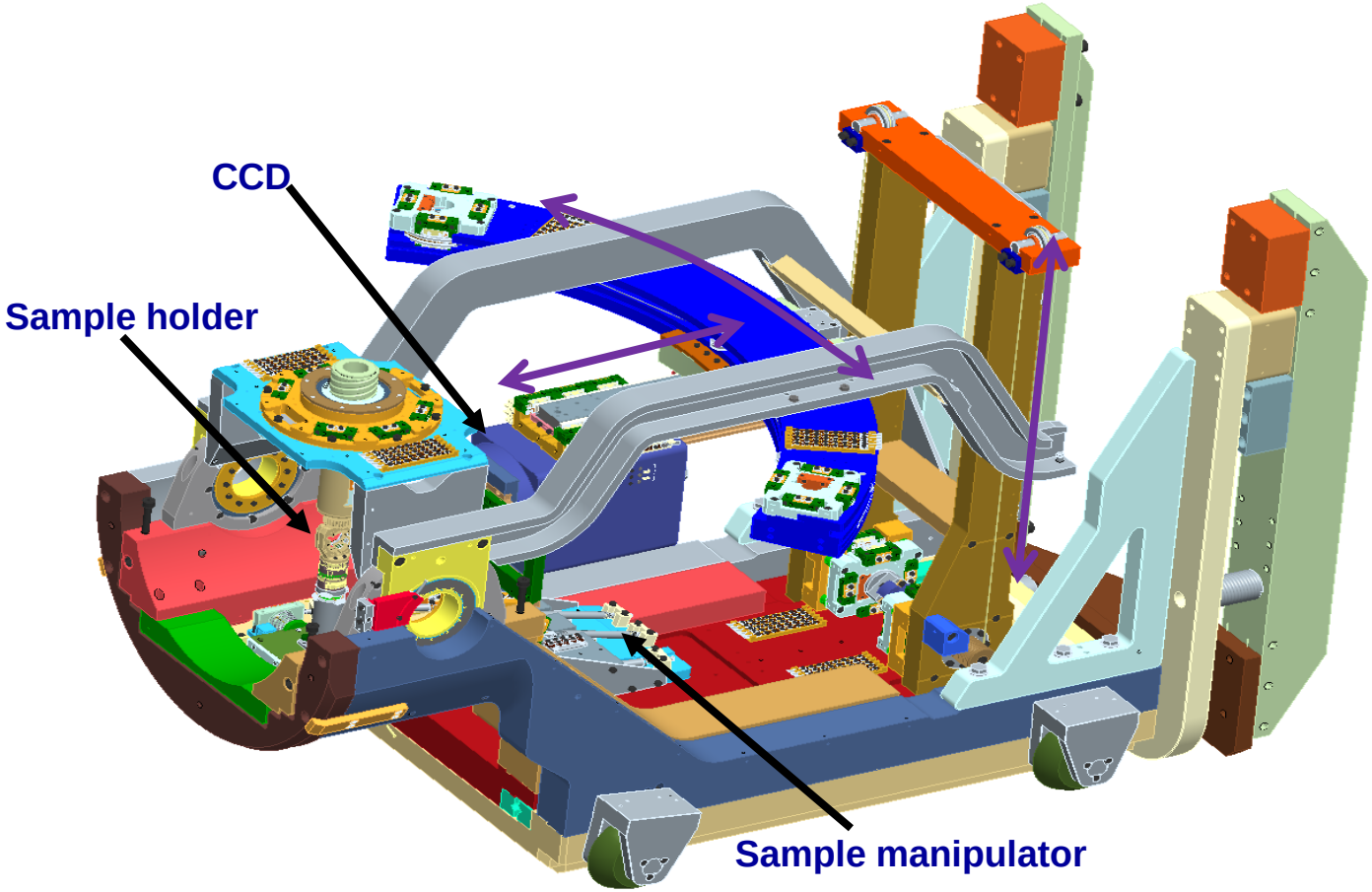

Inner part without magnet

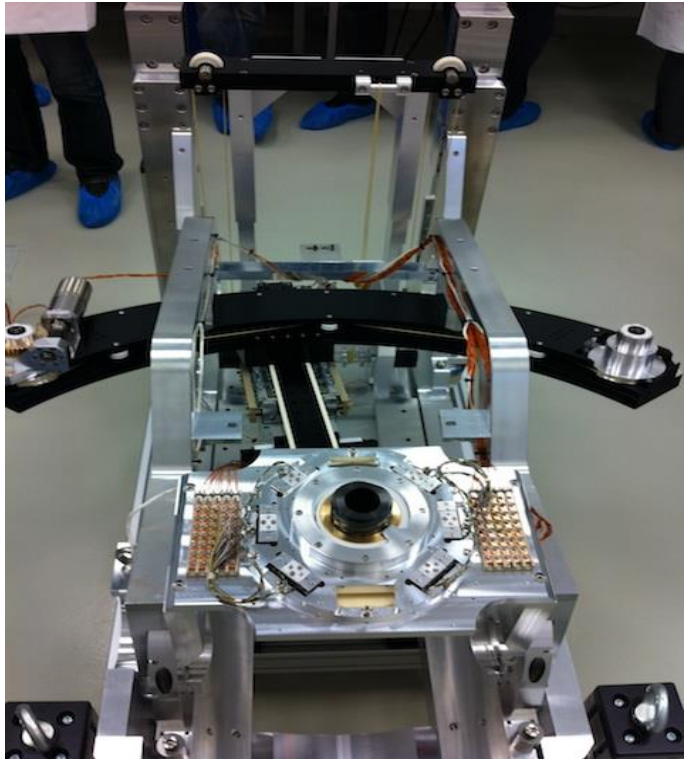

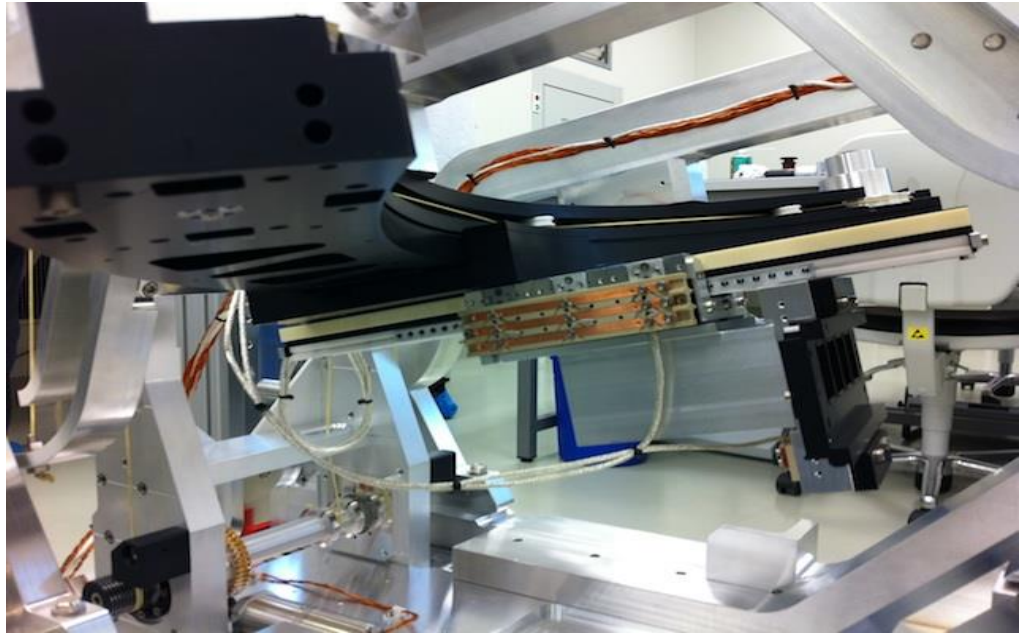

The detector manipulator inside the transport frame

Technische Universität Berlin

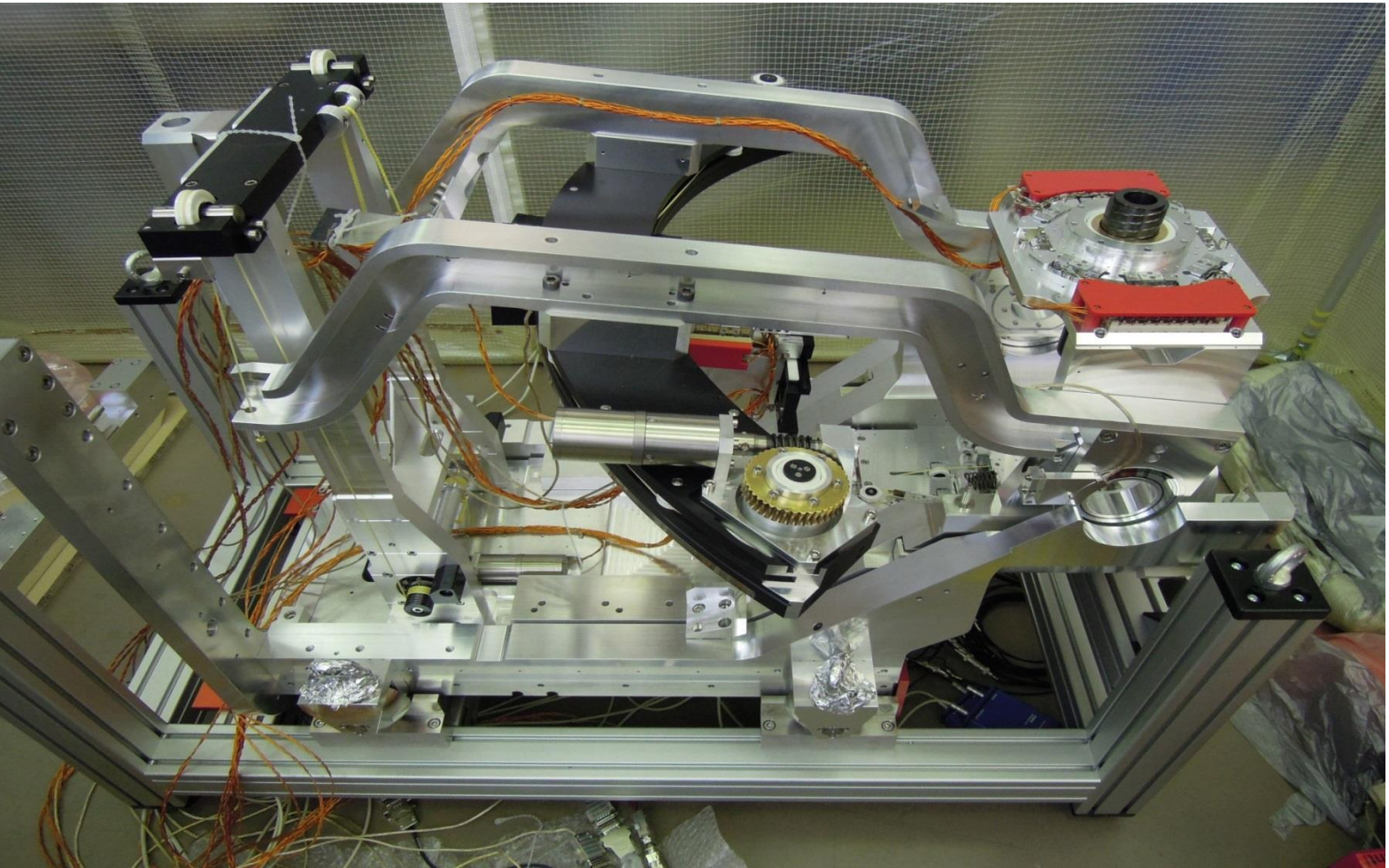

CCD movements

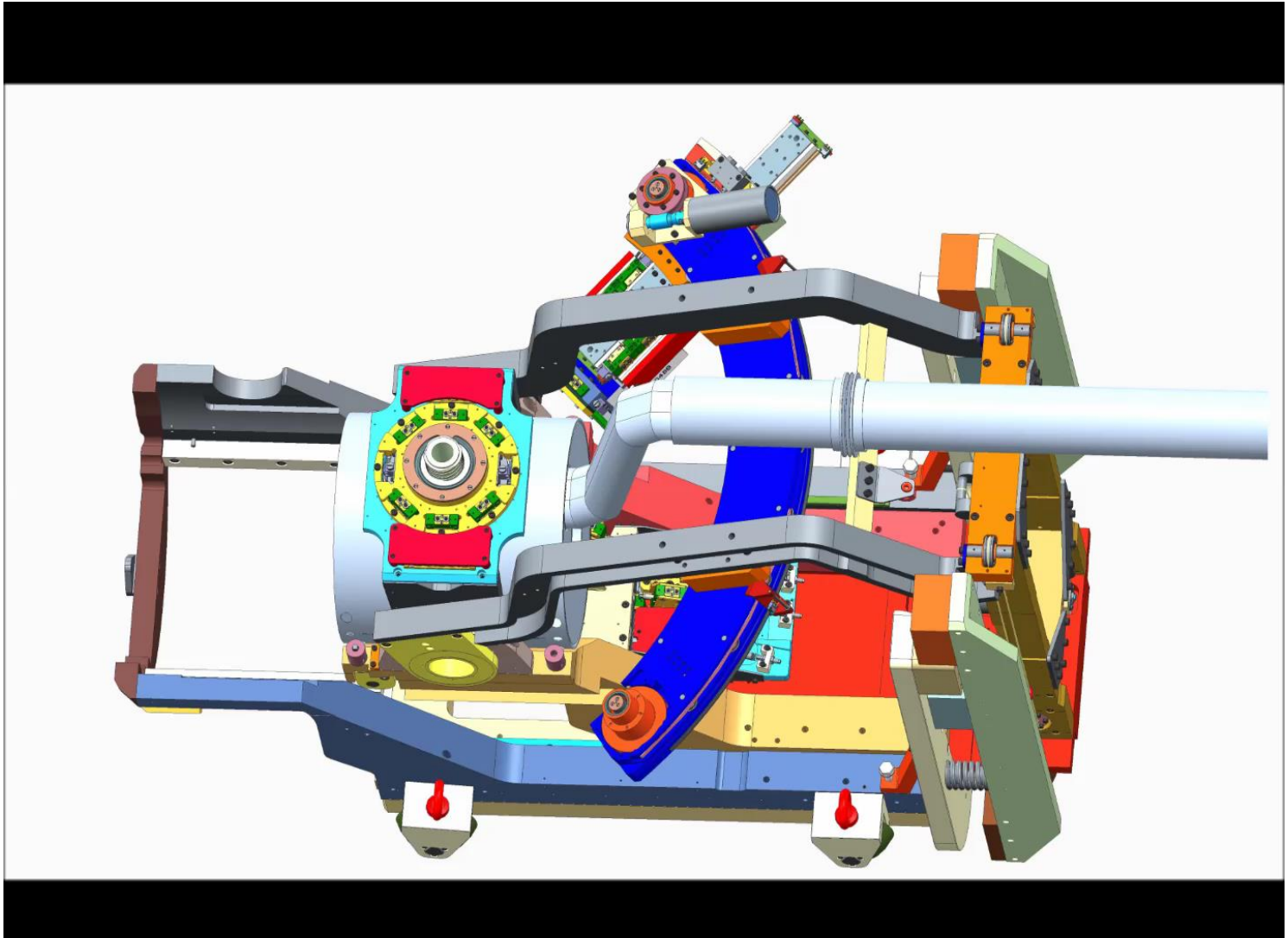

Sample manipulator

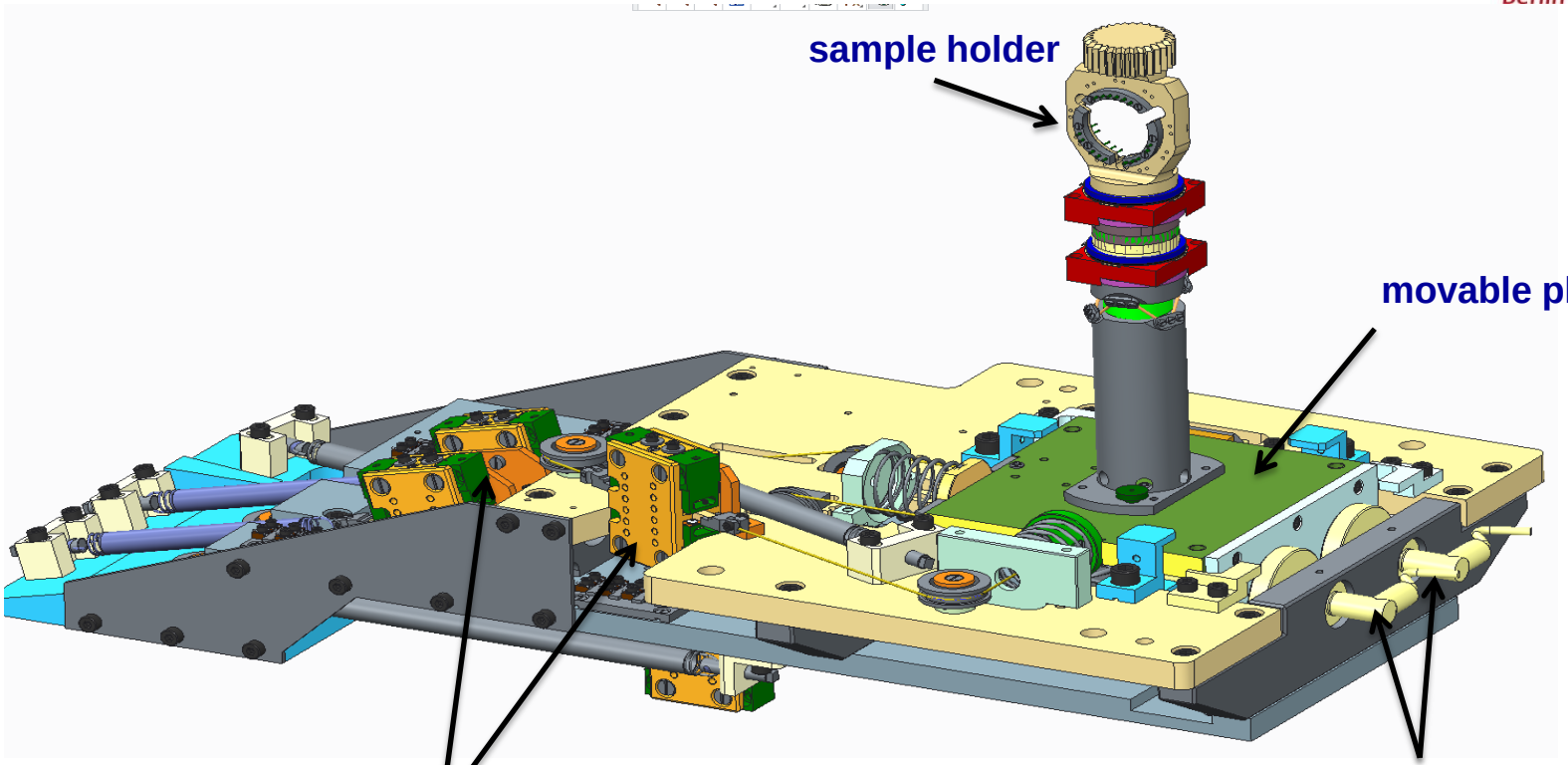

Sample manipulator

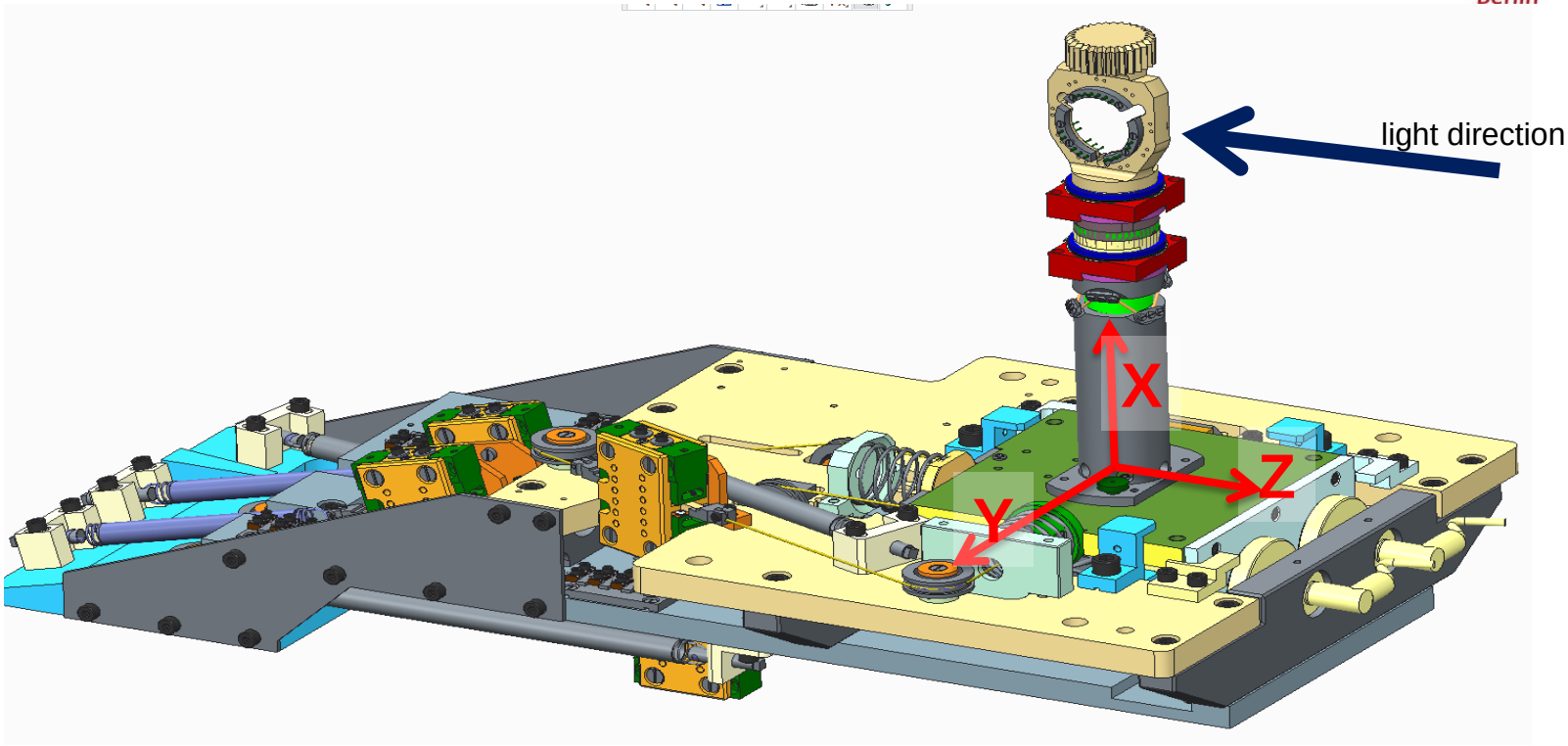

Sample manipulator

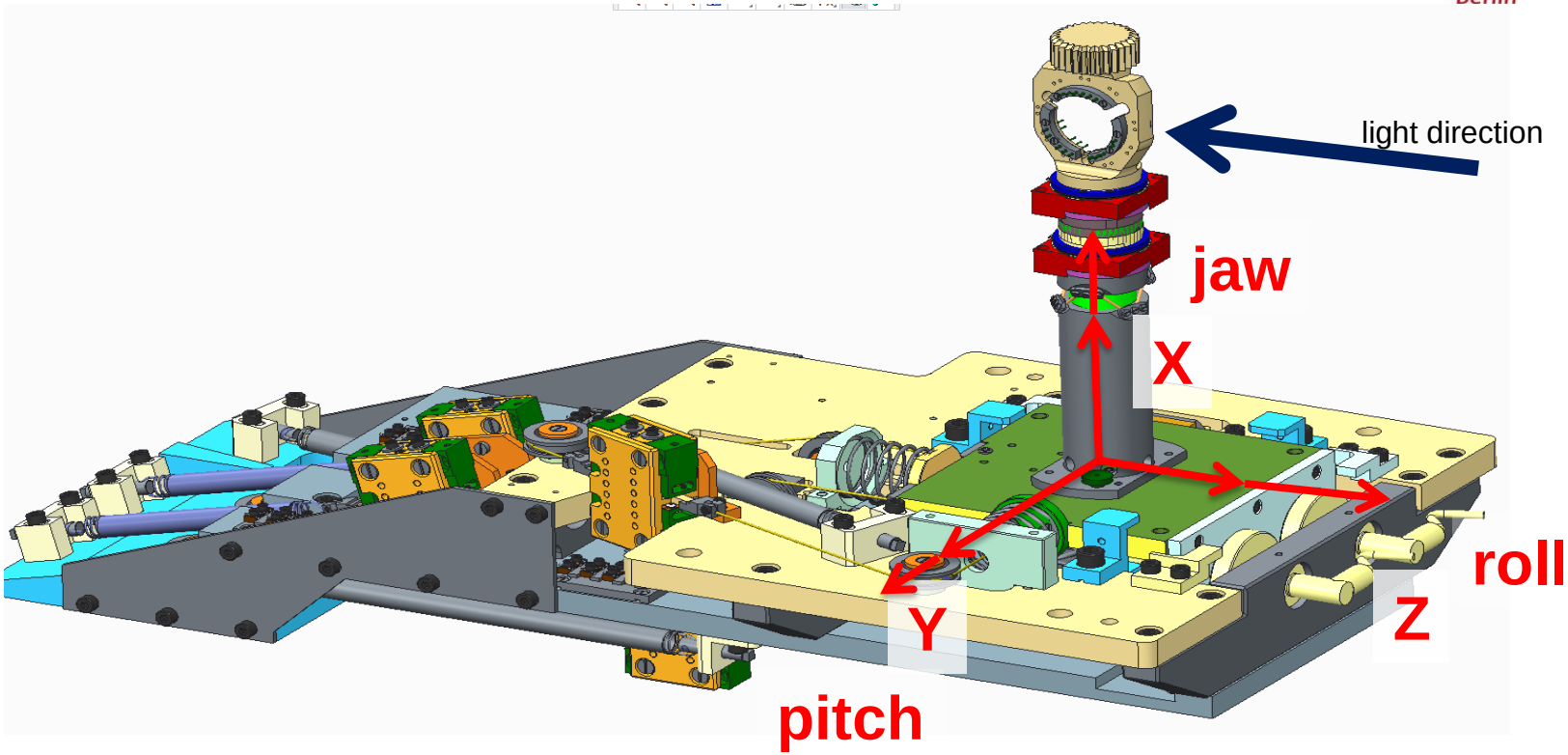

The sample manipulator

Technische Universität Berlin

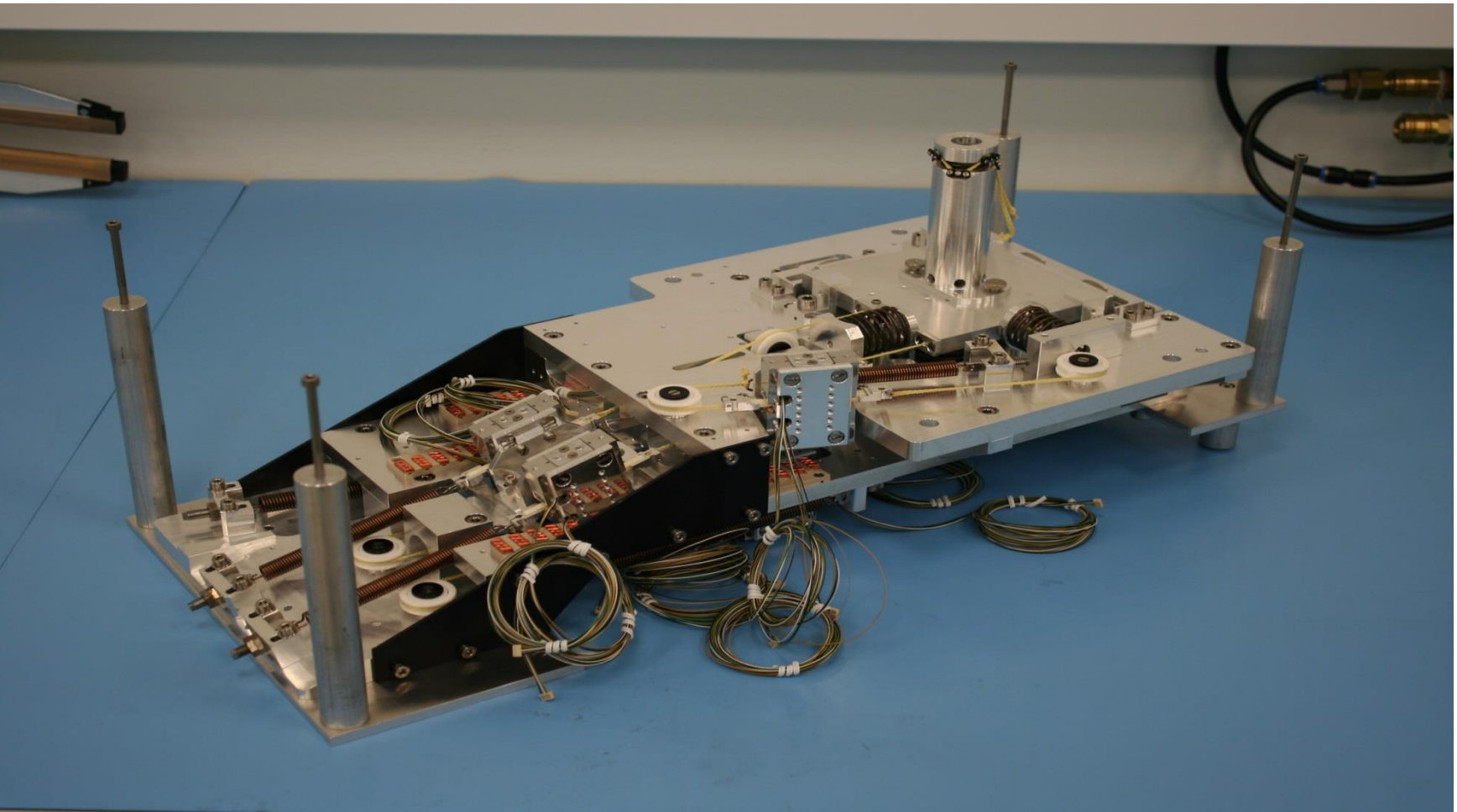

moving the sample platform 50 microns in beam direction and return to origin

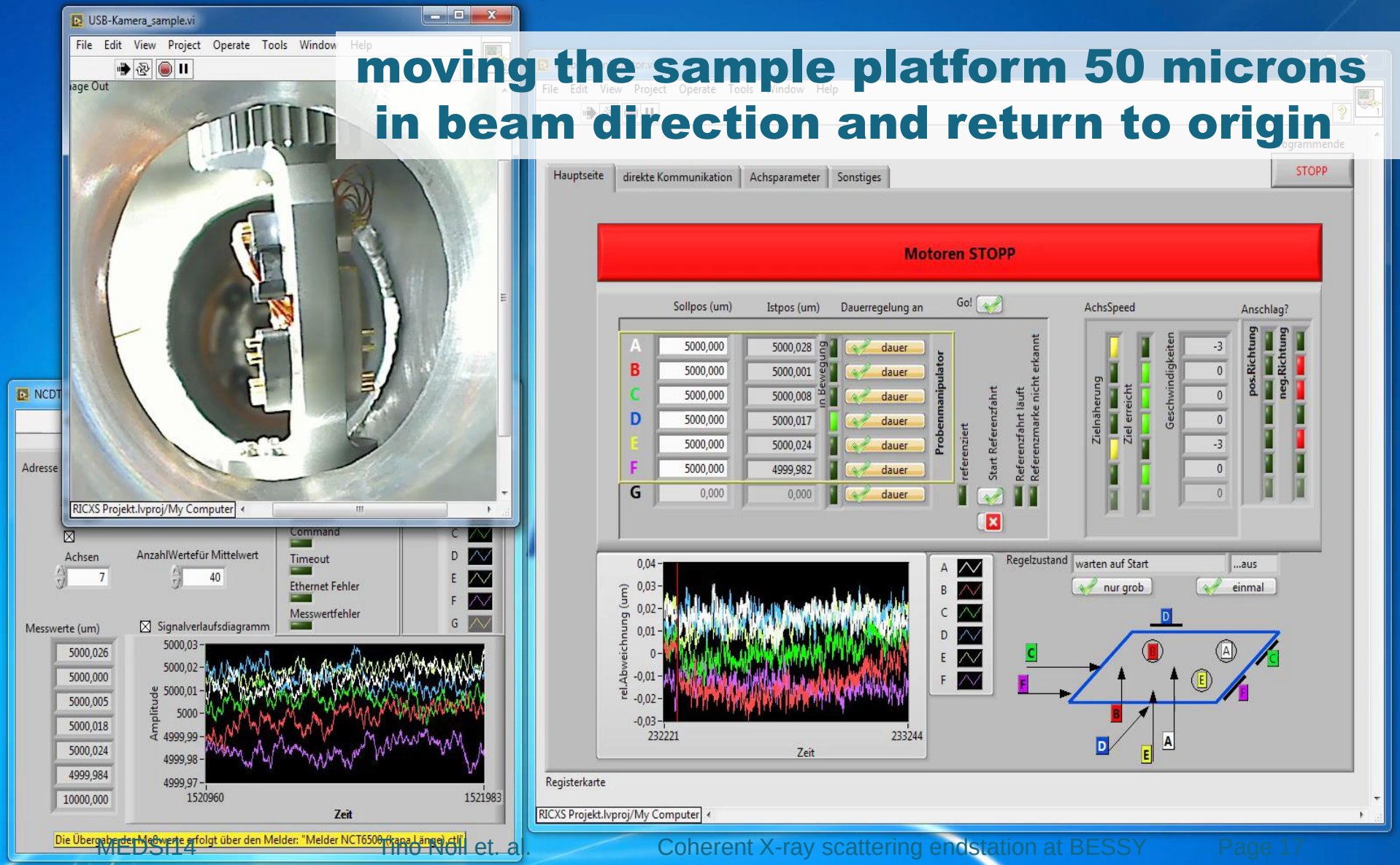

moving the sample platform 1 micron lateral to the beam

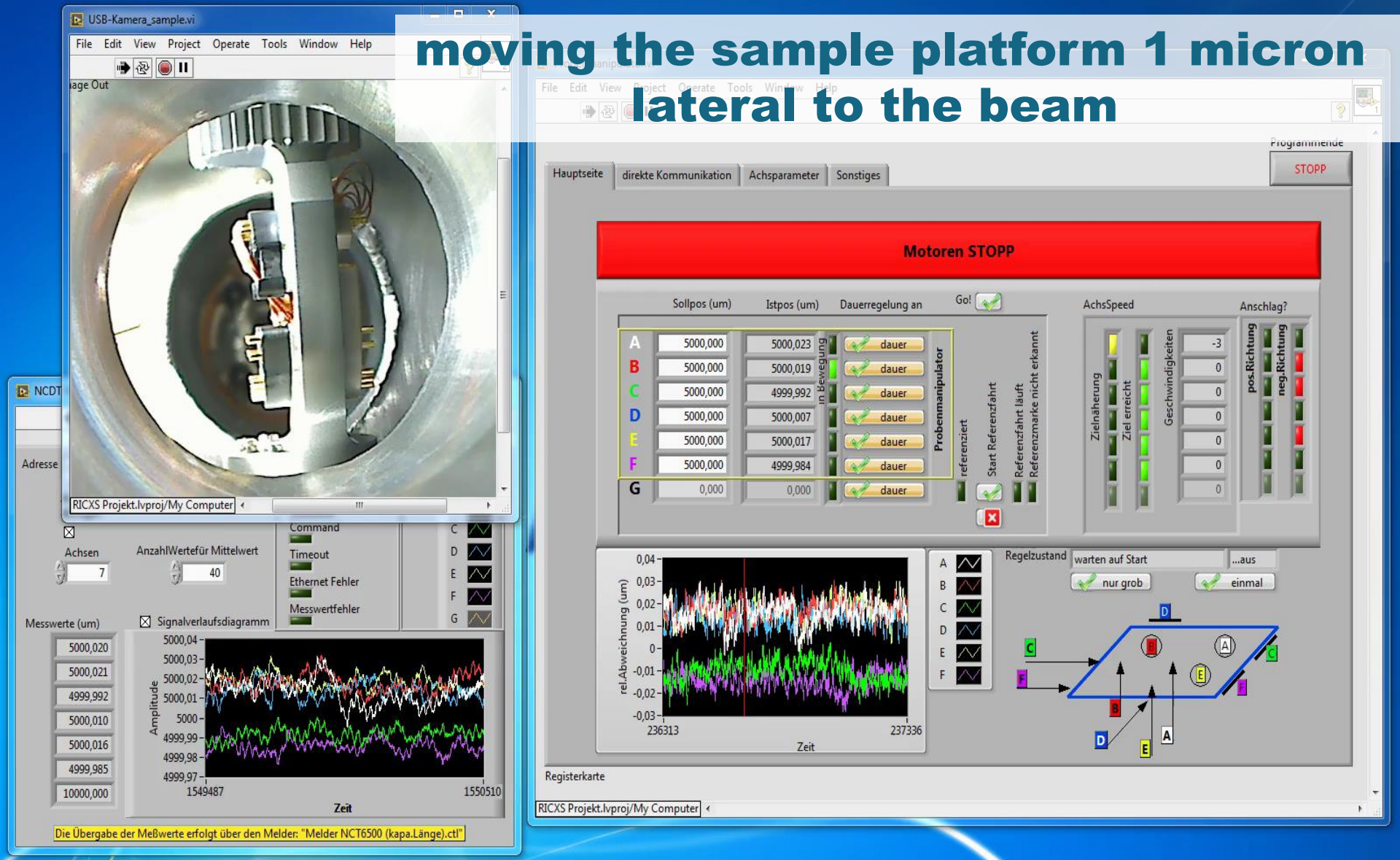

moving the platform 2mm vertical up and down

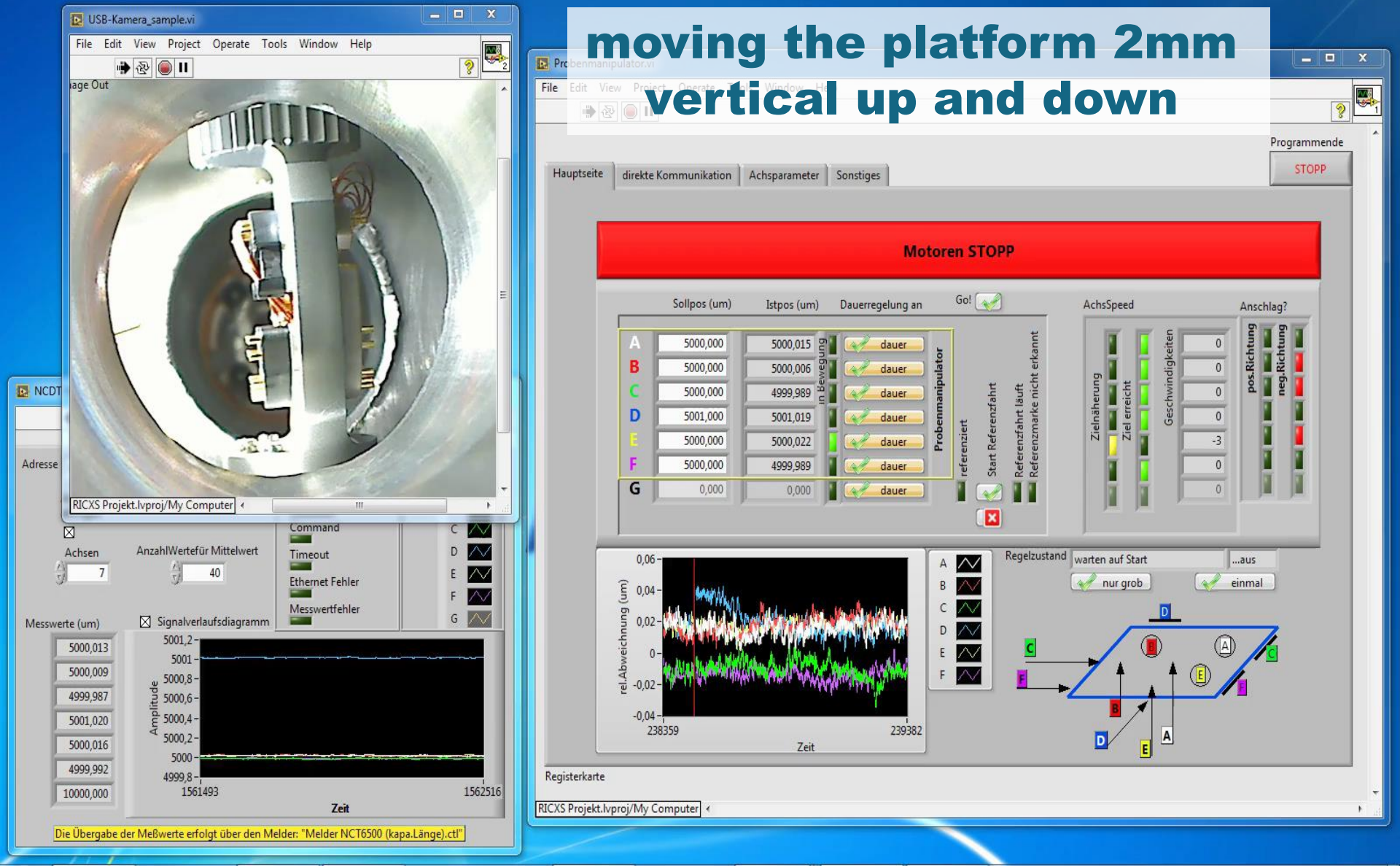

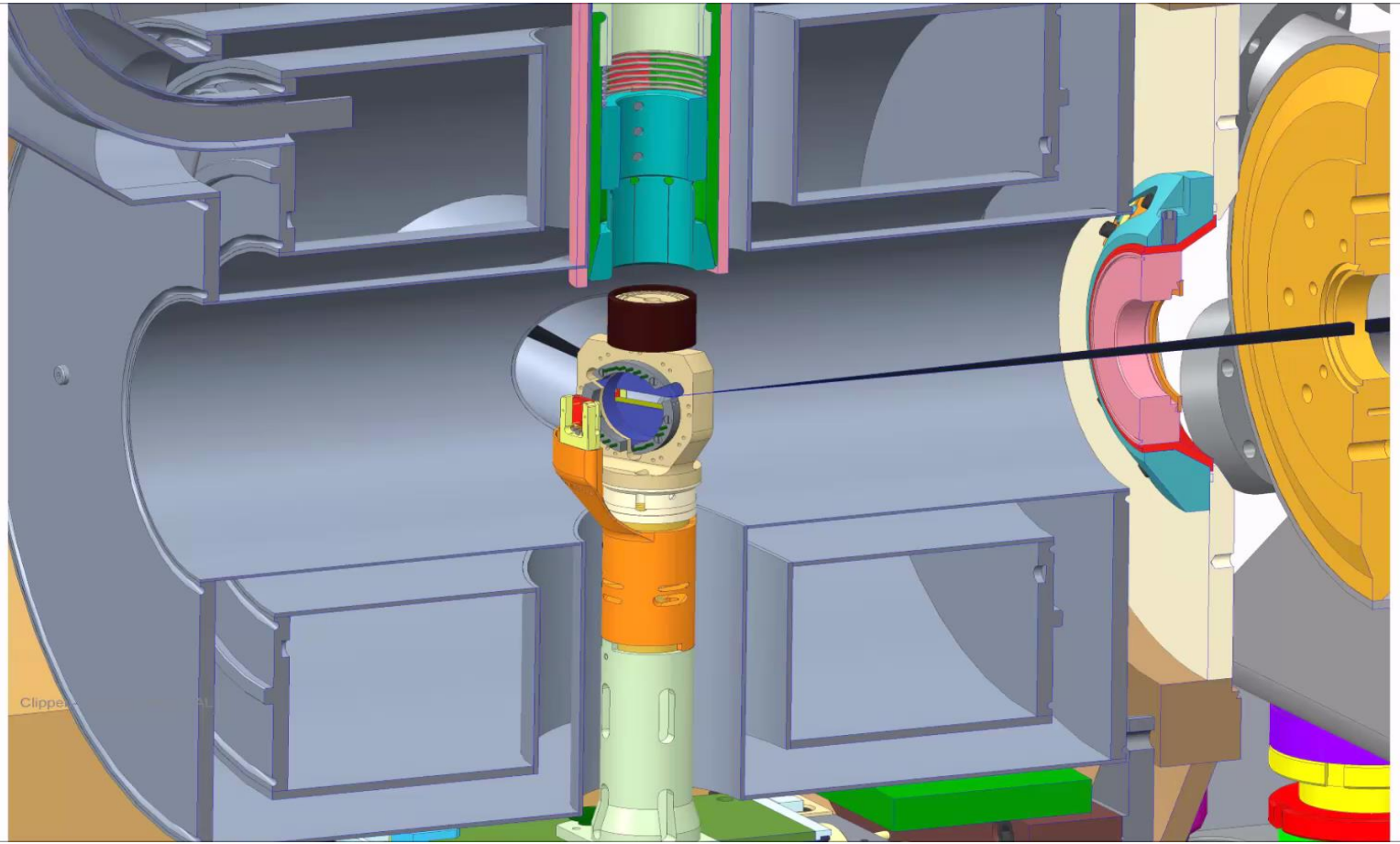

Sample transfer

coronal section of the endstation

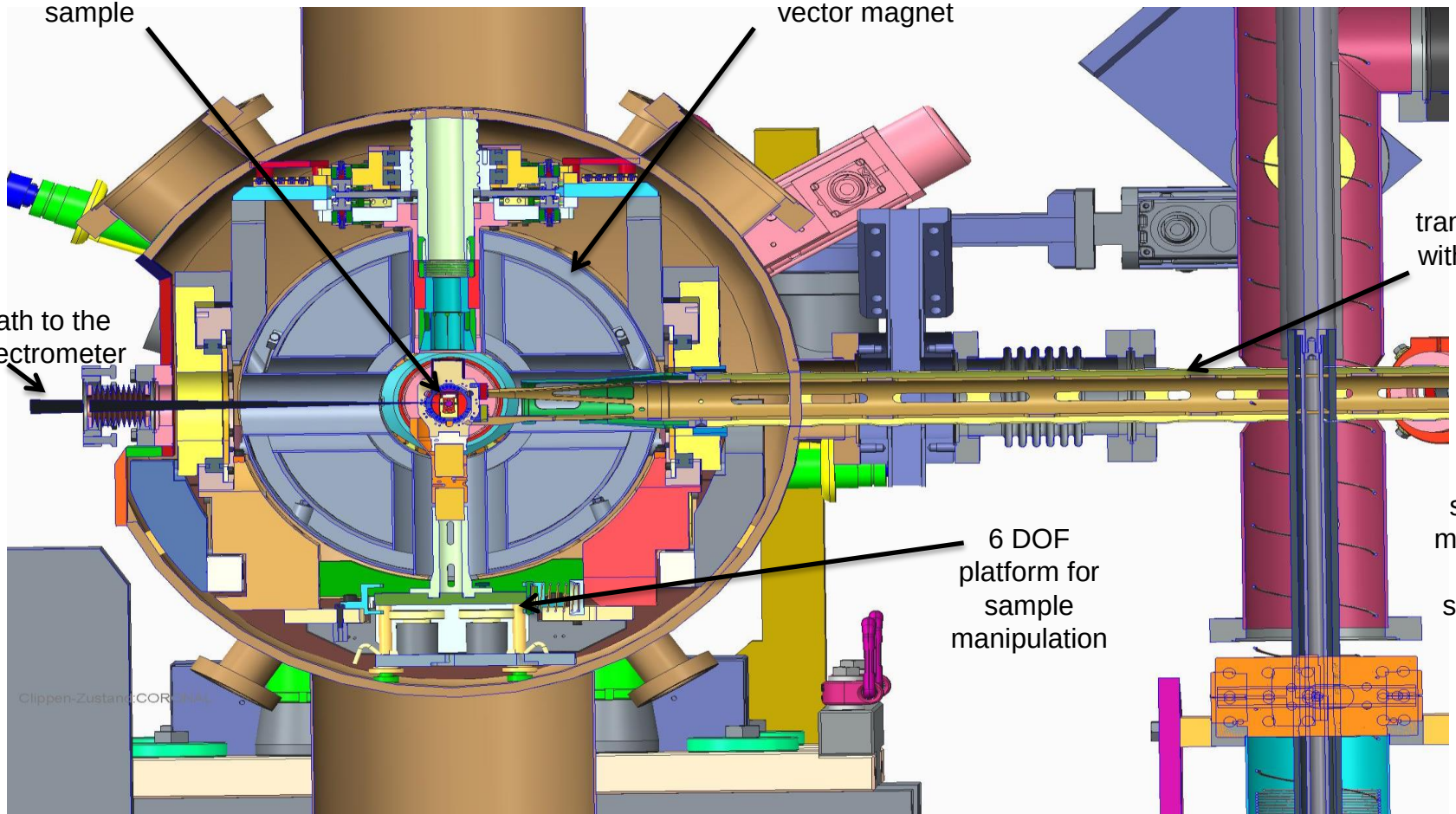

Sample transfer unit

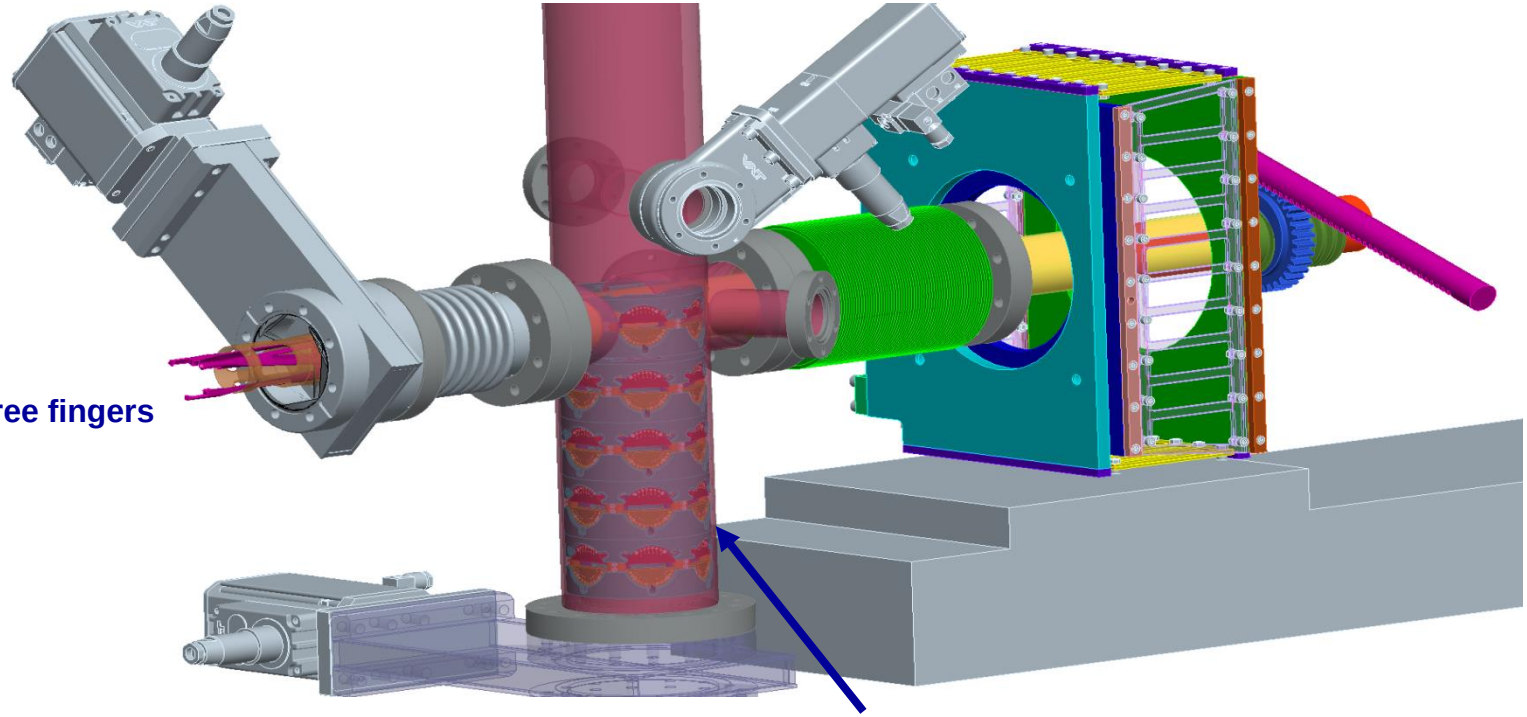

Sample exchange inside the chamber

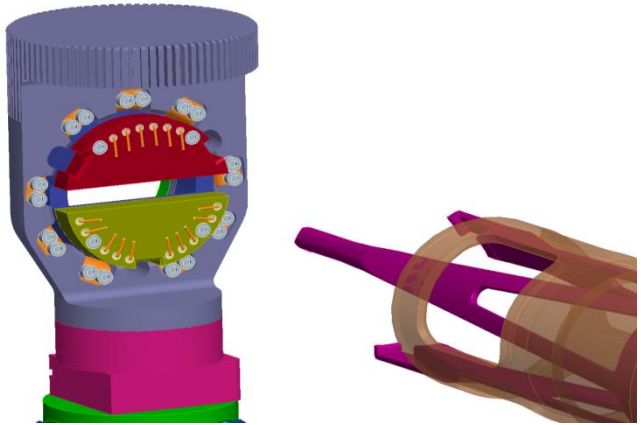

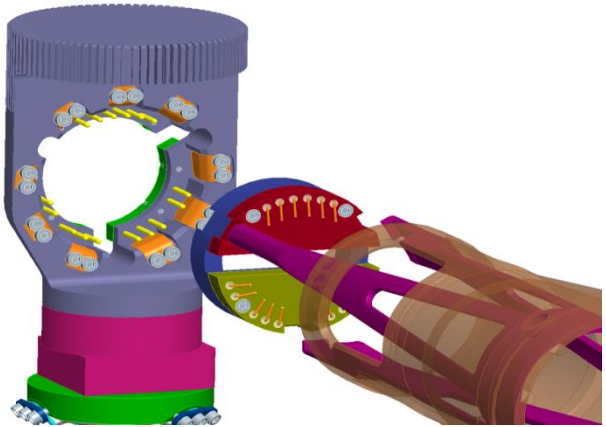

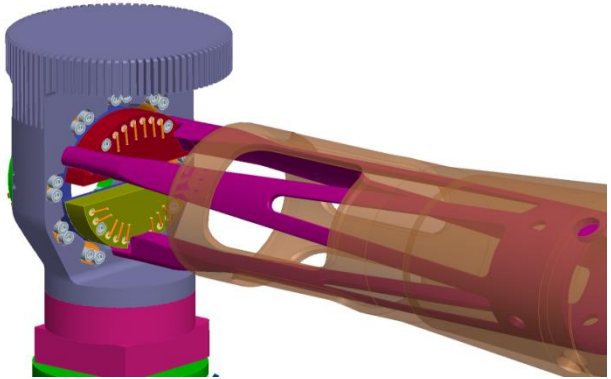

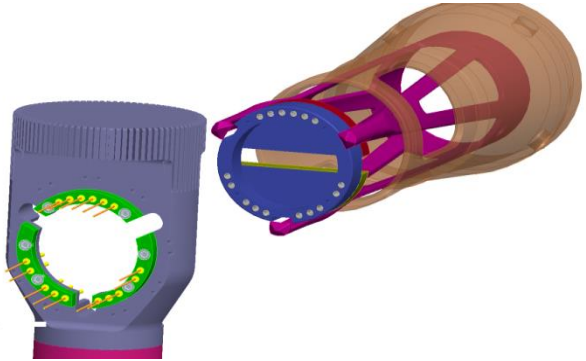

chuck mechanism

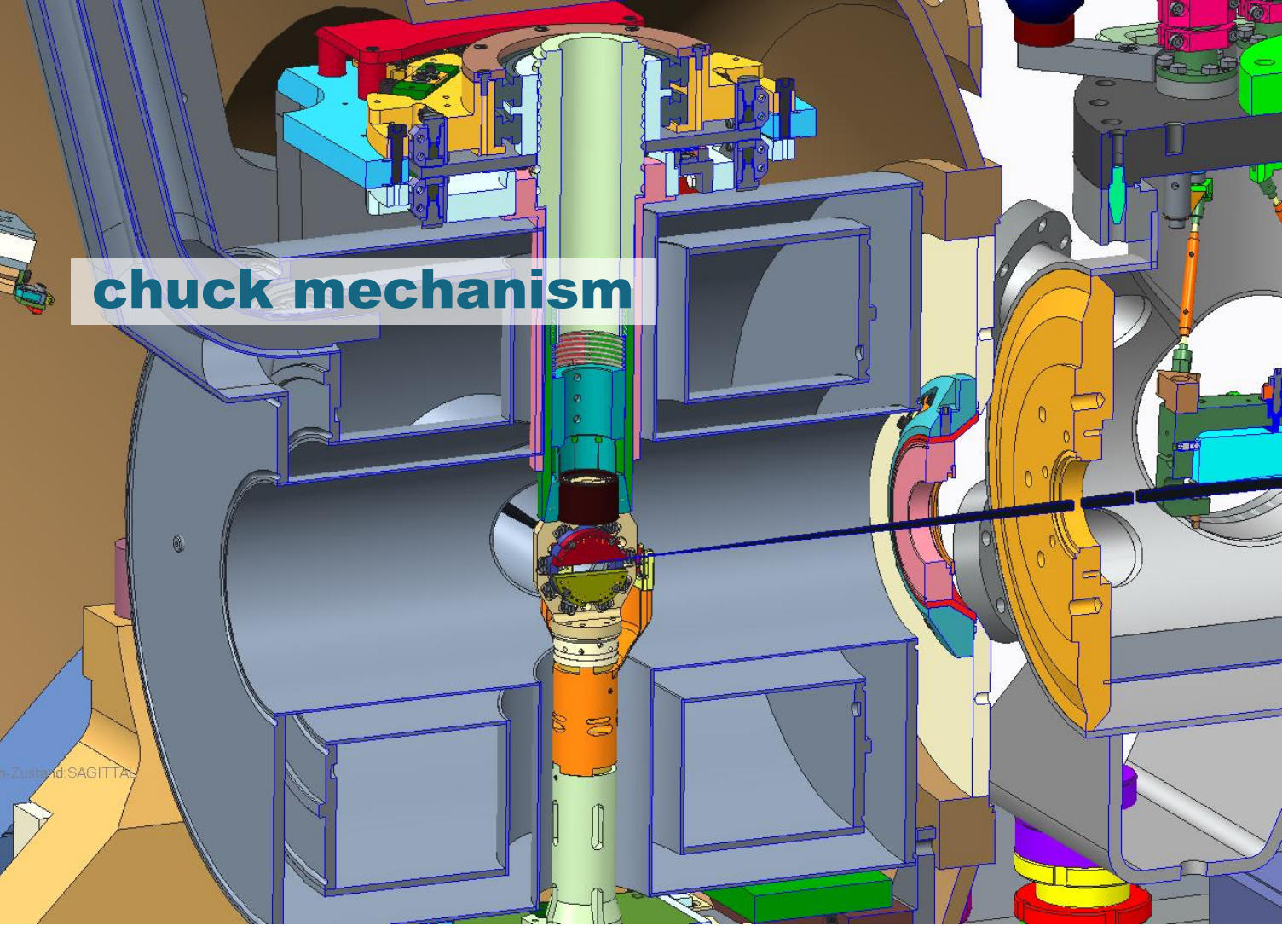

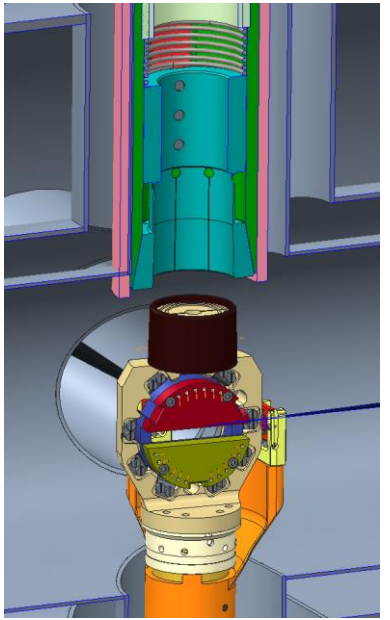

Thank you!