THE ESRF NEW STORAGE RING PROJECT
MAIN FEATURES AND MECHANICAL DESIGN ASPECTS

Philippe MARION, Loys GOIRAND, Jean-Claude BIASCI

marion@esrf.fr

On behalf of the project team, with specific contributions from
Filippo CIANCIOSI, Laurent EYBERT, François VILLAR, Damien COULON,
Bernard OGIER, Trevor MAIRS, Lin ZHANG, Yves DABIN and Jean-Luc REVOL

OUTLINE

- **The ESRF new storage ring: context, time schedule, expected gain.**

- **Mechanical design aspects of the new storage ring:**
  - Magnets
  - Girders
  - Vacuum chambers

THE EUROPEAN SYNCHROTRON RADIATION FACILITY

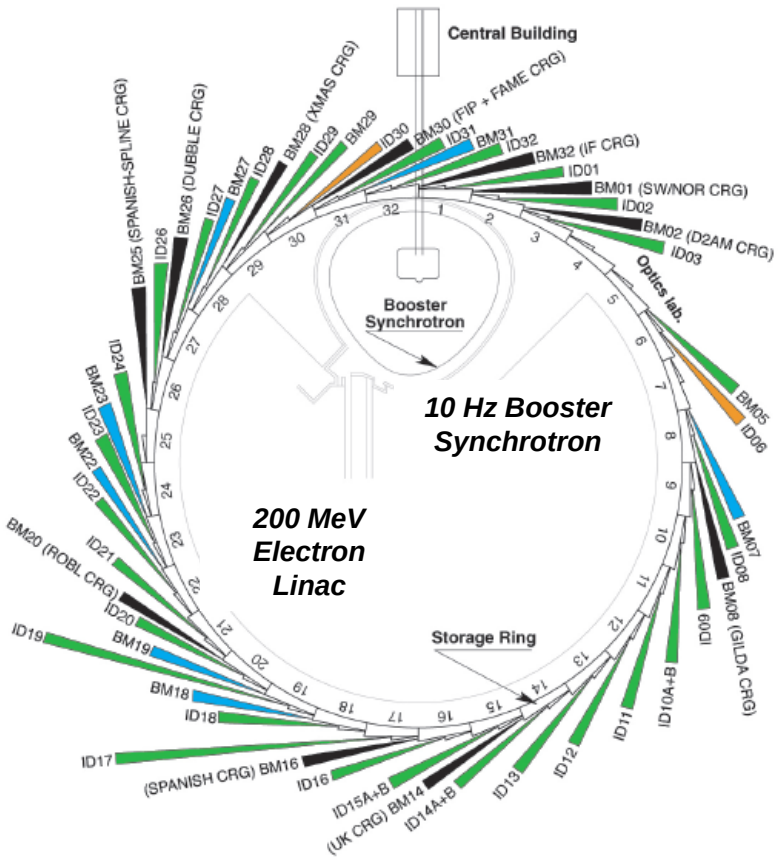

42 Beamlines
(including 12 Bending Magnet BL)

Third generation light source

Location:	Grenoble, France
Cooperation:	19 countries
Annual budget:	100 million €
Staff:	600
Start User Mode	1994

Energy	**6.04**	**GeV**
Multibunch current	**200**	mA
Horizontal emittance	**4000**	pm.rad
Vertical emittance	**4**	pm.rad
Storage ring circumference	**844**	m

THE ESRF UPGRADE PROGRAMME

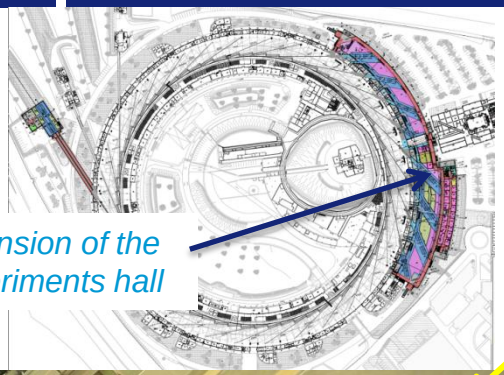

Extension of the Experiments hall

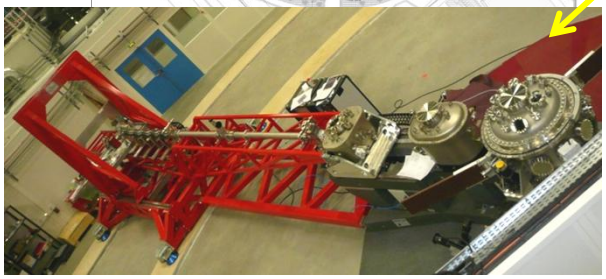

@ **Phase I** (from 2009 to 2015)

- Eight new beamlines 80% done
- Extension of the experiments hall done
- Some storage ring developments done

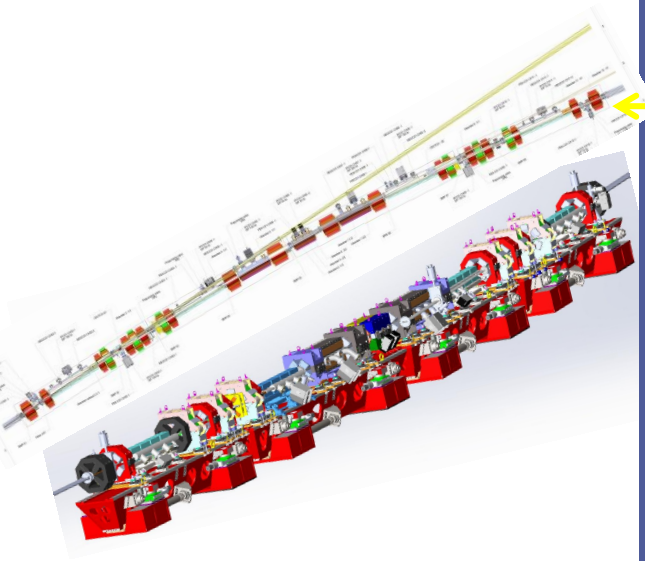

@ **Phase II** (from 2015 to 2022)

- Major upgrade of the X ray source: Complete reconstruction of the storage ring for lower emittance, higher brilliance.
- Developments in instrumentation and support facilities
- Four new beamlines

Phase II approved by the ESRF council in June 2014

THE ESRF II STORAGE RING - TIME SCHEDULE AND BUDGET

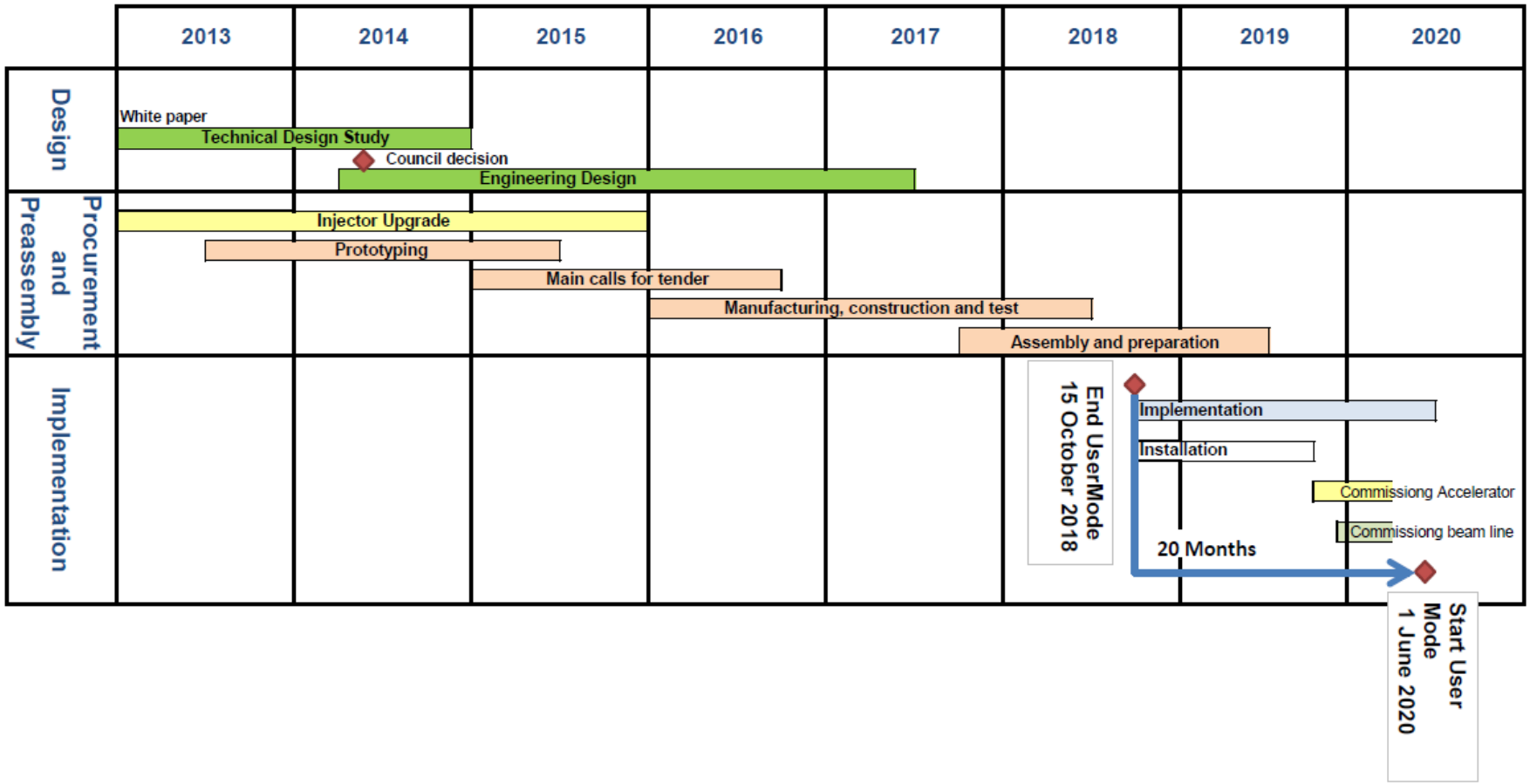

Budget = 100 M€

THE ESRF STORAGE RING II CHARACTERISTICS

The e^- beam

	Now	Storage ring II
Energy (GeV)	6.04	6
Multibunch current (mA)	200	200
Circumference (m)	844.39	843.98
Horizontal emittance (pm.rad)	4000	150
Vertical emittance (pm.rad)	4	5

reduced by factor 27

emittance ~ beam size x beam divergence
emittance = cst along the ring

- Must fit in the same tunnel : same circumference
- IDs at same locations: keep BIs where they are
- Re-use injector complex
- Use non-supra magnets technology

e⁻ HORIZONTAL EMITTANCE OF STORAGE RINGS WORLD WIDE

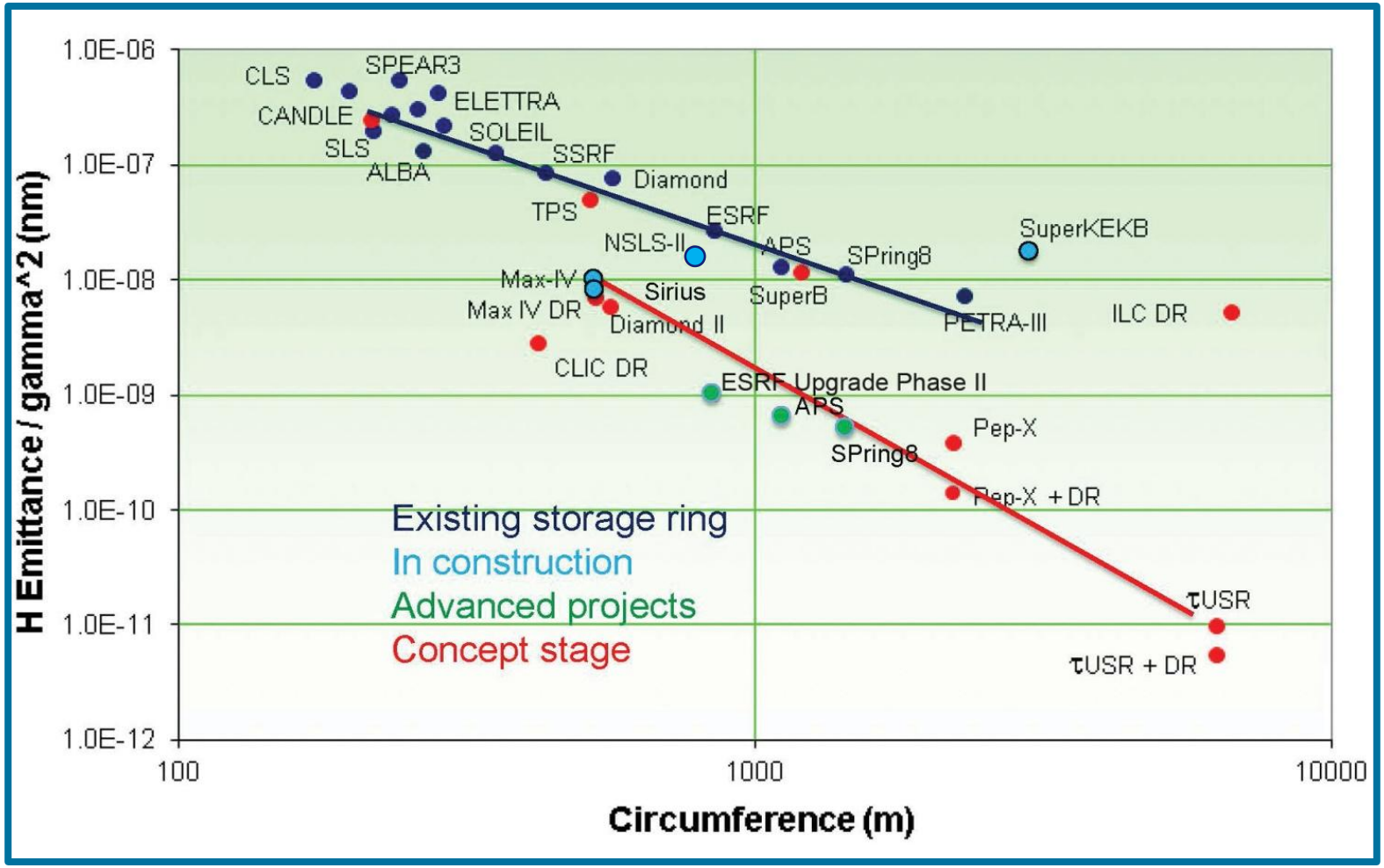

Courtesy: Pantaleo Raimondi

GAIN IN PHOTON BEAM BRILLIANCE

e- beam emittance ↘ ⇨ Undulators photon beam brilliance ↗

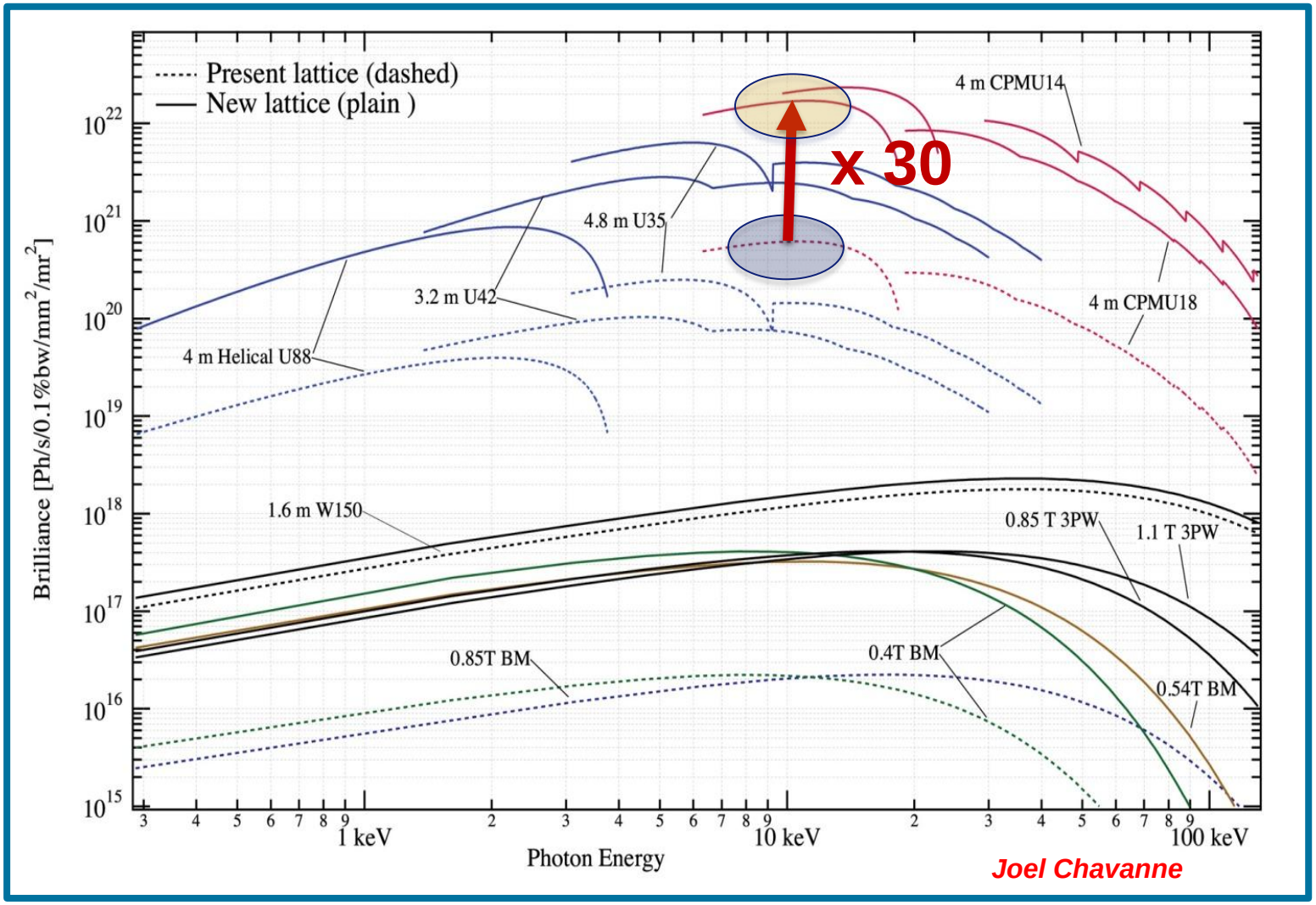

Joel Chavanne

GAIN IN COHERENCE

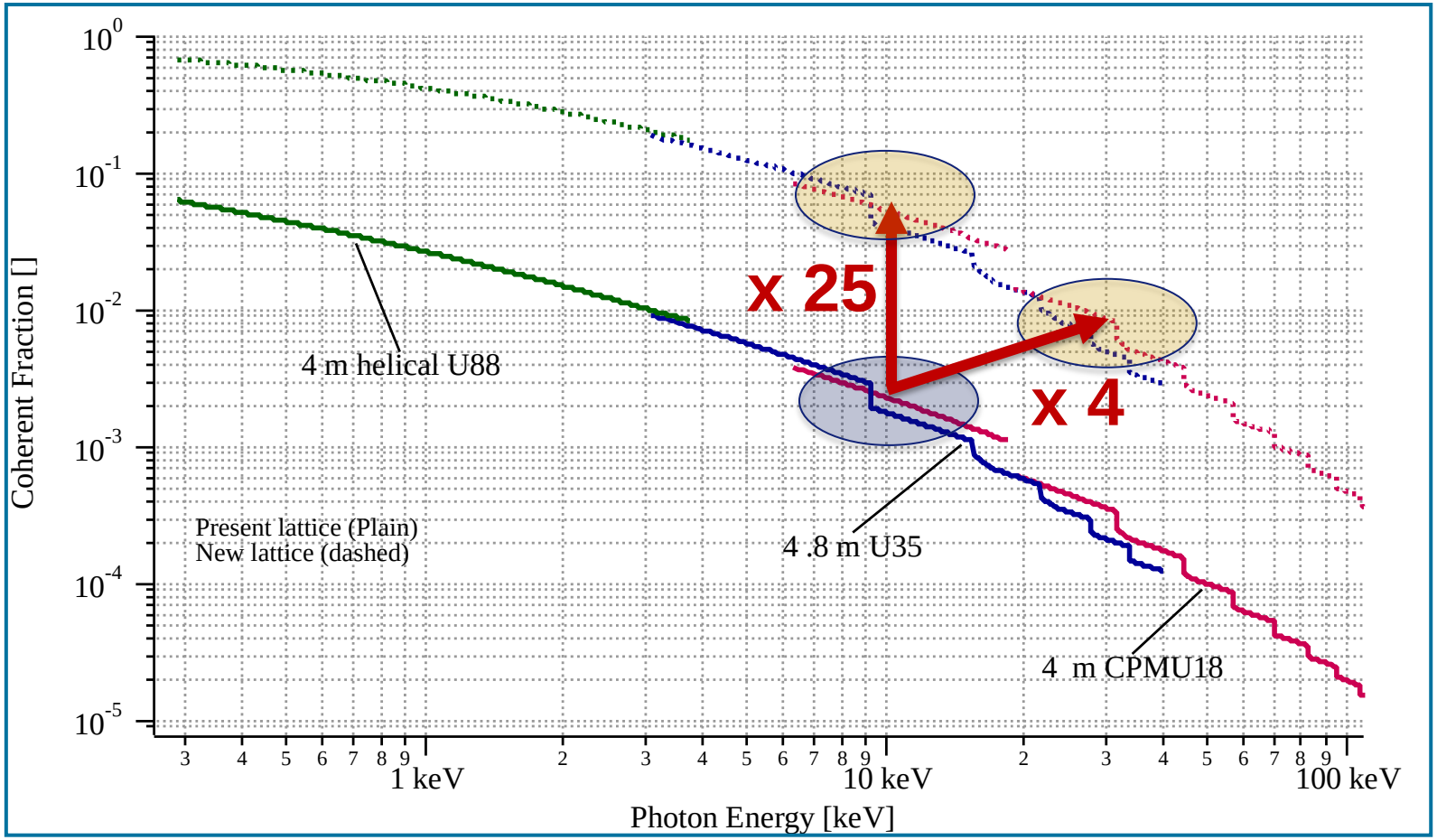

Joel Chavanne

NEW LATTICE VS PRESENT ESRF LATTICE

ESRF storage ring = 32 cells each cell = 26.4m long

Present ESRF lattice

Double Bend Achromat = (2 dipoles + 15 quad. sext.) per cell
ID length = 5 m (standard) / 6m / 7m

ESRF II lattice

Hybrid 7 Bend Achromat = (4 dipoles + 3 dipoles-quad + 24 quad., sext., oct.) per cell
ID length = 5 m

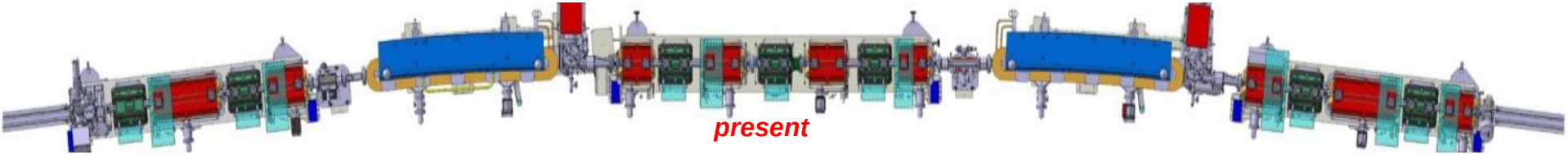

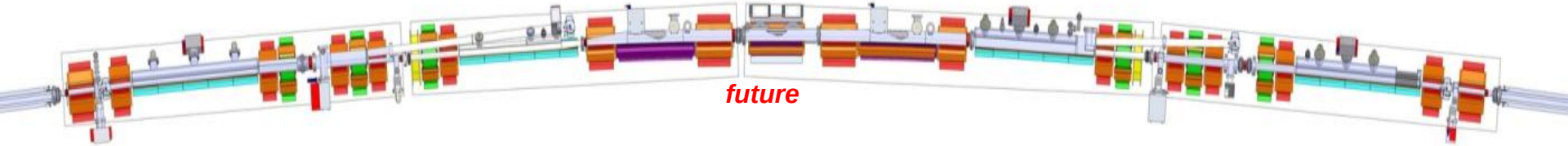

Free space between magnets (total for one cell): 3.4m instead of 8m today !!

Main engineering challenges:
- Lack of space
- High precision & stability positioning requirements

MECHANICAL DESIGN ASPECTS OF THE ESRF II STORAGE RING :

MAGNETS, GIRDERS, VACUUM CHAMBERS

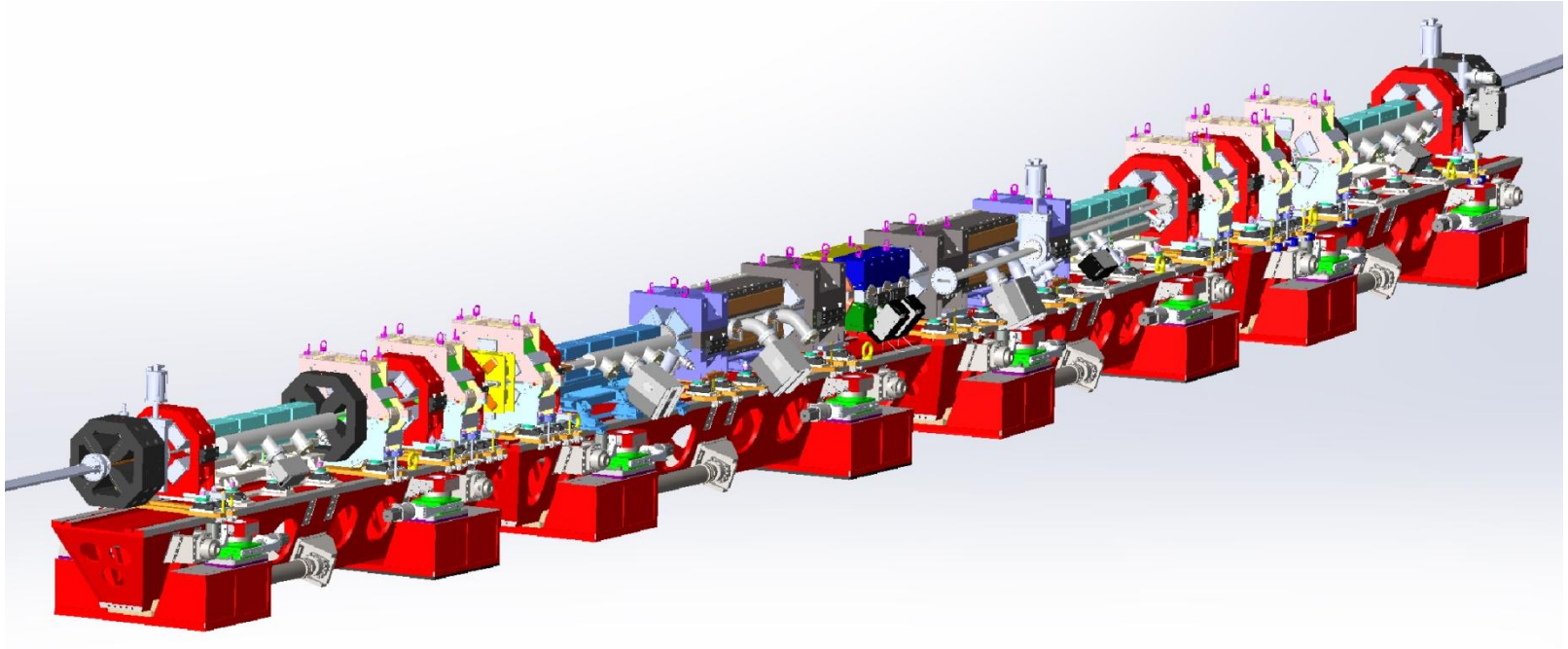

MAGNETS : QUANTITIES & TYPES – TECHNICAL CHALLENGES

Total = 1088 new magnets

Magnet type		Quantity	Multipole strength		Iron length		
Dipoles with longitudinal gradient	DL	128	0.17-0.67	T	1788	mm	*Permanent magnets*
Dipole quadrupoles	DQ	96	0.43-0.54 34	T T/m	1078	mm	*Bulk (Low carbon iron)*
Moderate gradient quadrupoles	Q	384	52	T/m	162-295	mm	*Bulk (Low carbon iron)*
High gradient quadrupoles	Q	128	85	T/m	388-484	mm	
Sextupoles	S	192	900-2200	T/m^2	204	mm	*Classical laminated*
Octupoles	O	64	$51.2\ 10^3$	T/m^3	120	mm	*Bulk (Low carbon iron)*
Correctors H(V)	C	96	0.08	T	120	mm	*Classical laminated*

Main technical challenges

- Poles position and shape accuracy : 40µm for Quad., Dipoles and Dipoles-Quad.

To be guaranteed for an assembly of several mechanical parts. Must be preserved when opening and closing the magnet

- Dipoles = permanent magnets
- Novel design Dipoles-quadrupoles

DIPOLE MAGNETS

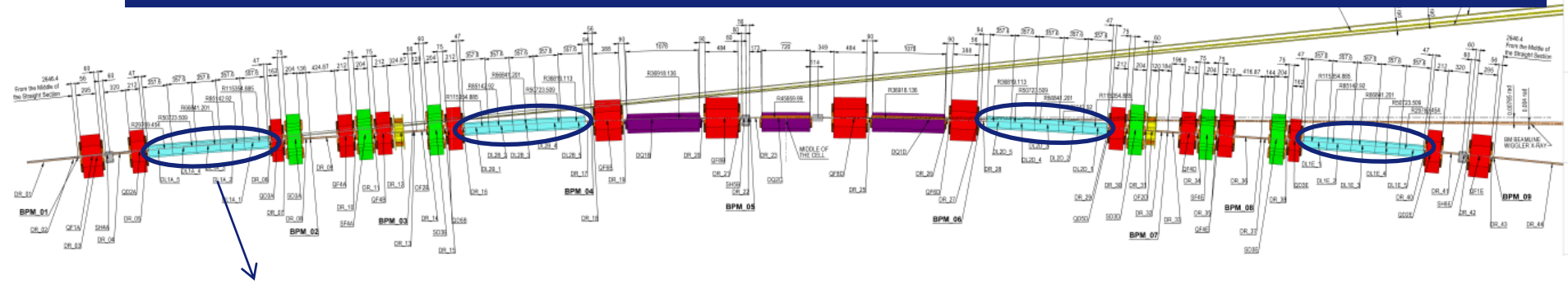

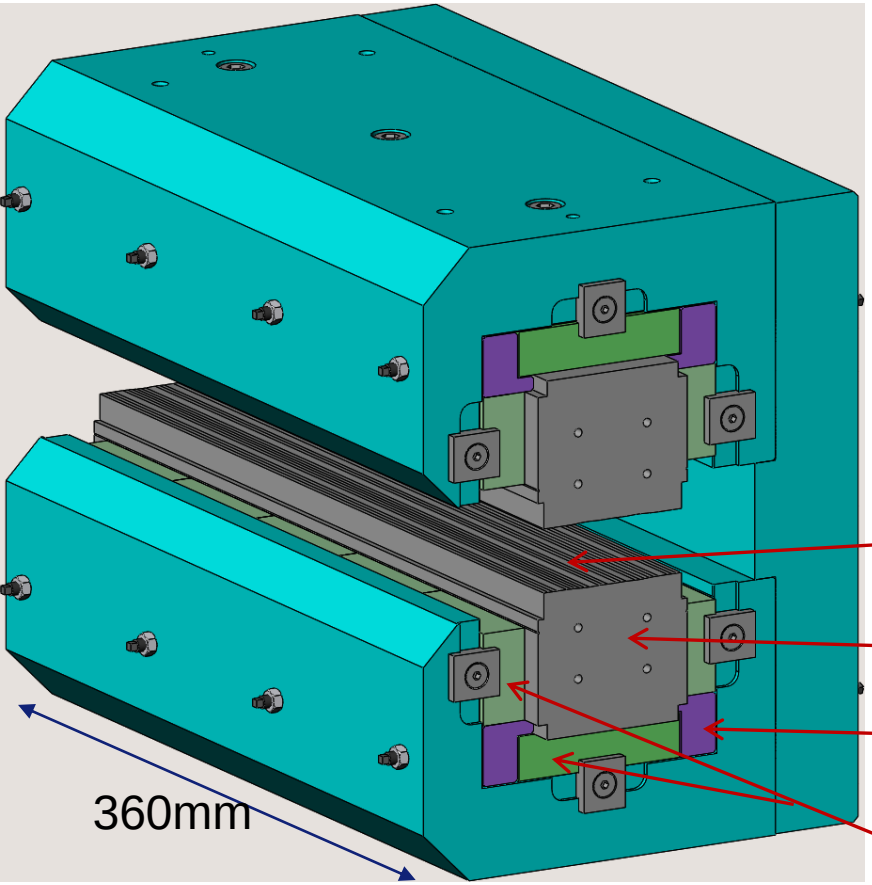

- Permanent magnets with machined yokes
- 4 dipole magnets per cell (x 32 cells)
- Each magnet is made of 5 modules with different fields => Longitudinal gradient (0.6T -> 0.2T)
- Transverse field homogeneity (measured) : better than 10-4 in relative over 12mm.
- Prototypes are being characterised.

Machined shape for transverse field homogeneity

Poles (Low carbon iron – XC10 or Armco)

Positioning shims (Al)

Permanent magnets (Sm_2Co_{17})

Courtesy: Joel Chavanne, Bernard Ogier, Francois Villar

COMBINED DIPOLE QUADRUPOLE MAGNET

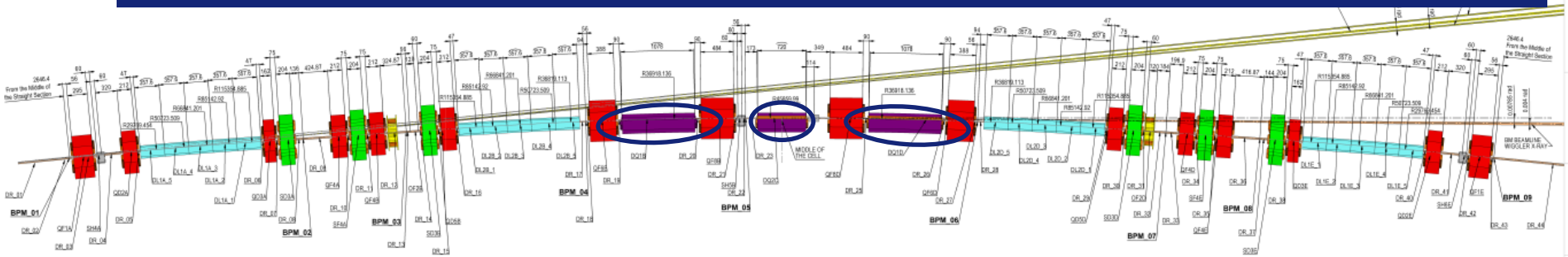

Combined dipole quadrupole (0.54T and 37T/m)

3 magnets per cell (x 32 cells)

Mechanical locating system for high repeatability when opening / closing

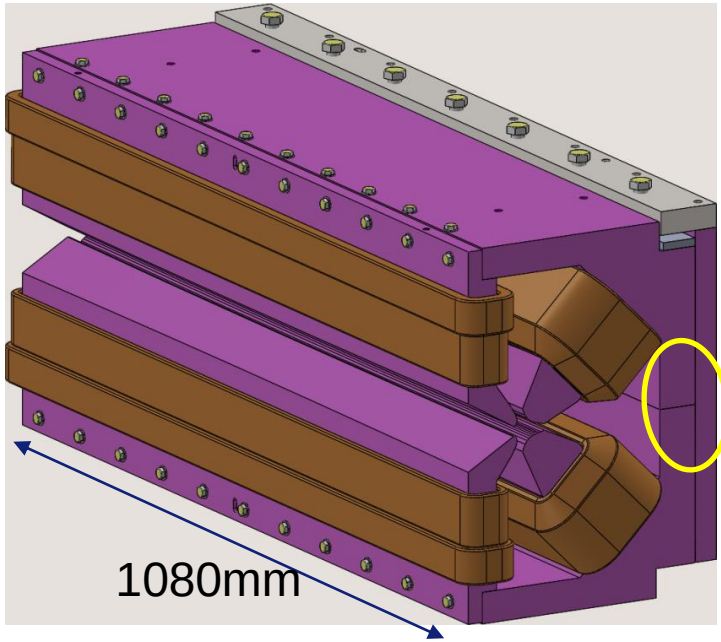

The yokes are curved to follow e- orbit and vacuum chamber. Pole shape tolerance 40µm.

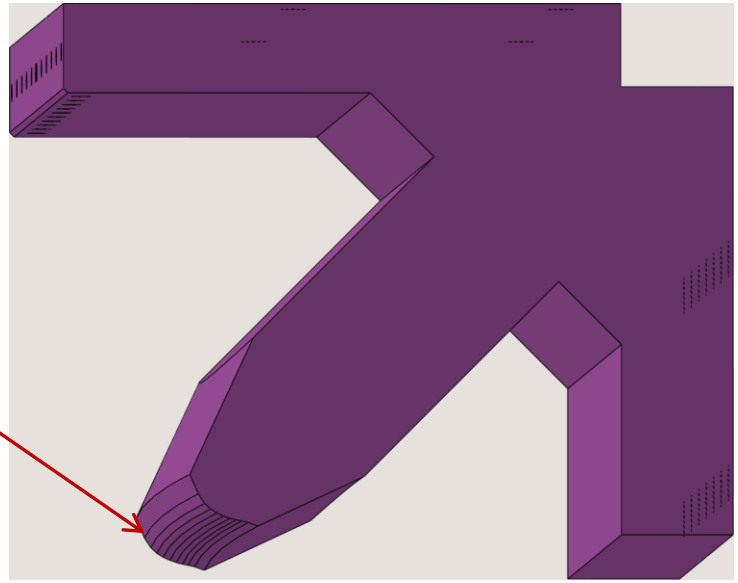

Design in progress. First machining test will be measured soon.

Courtesy: Gael Le Bec, Francois Villar

GIRDERS CONSTRAINTS AND SPECIFICATIONS

INPUT DATA

- Girder length = 6m, magnets weight = 6 000kg for 6m
- Static positioning required:

	HORIZONTAL (Y)	VERTICAL (Z)
Girder to girder	50 µm	50 µm

- Sensitivity to vibrations as compared to present ESRF lattice: x 2 in vertical ; x 6 in horizontal
  (although vertical still 10 times more sensible than horizontal)
- ESRF site and slabs large displacements
  - Static > 100 µm / year
  - Vibration level = high compared to other sites

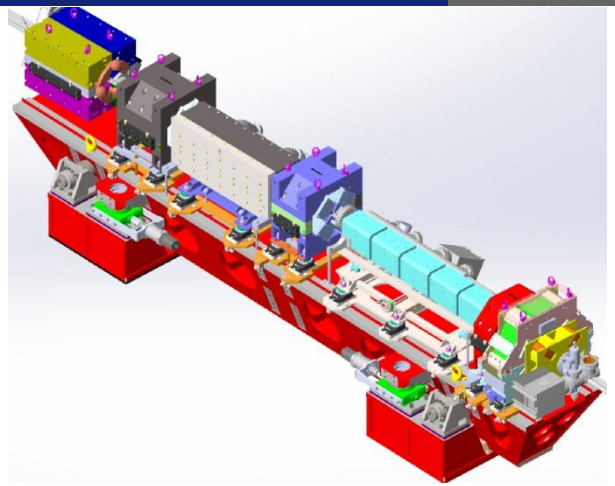

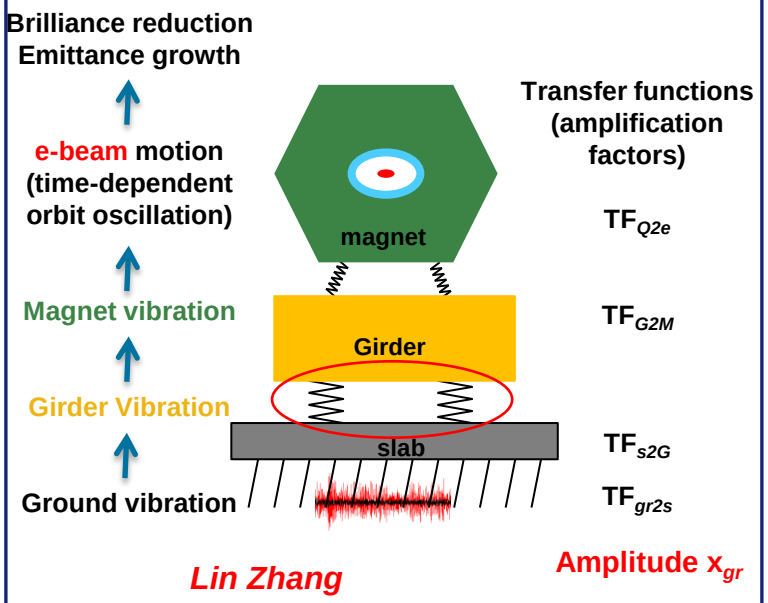

GIRDER PROJECT SPECIFICATION

- Motorized Z adjustment resolution 5µm
- Manual Y adjustment resolution 5µm
- 1st natural frequency = 50Hz (design criteria)
  35Hz (measured target)
- Careful control of thermal effects

High stiffness and High resolution

The European Synchrotron | ESRF

EXISTING GIRDERS WORLD WIDE

indicates motorised systems

Light Source	description	f_1 (Hz)	$TF_{s2M\&G}$	Damping
ESRF	3 motorized jacks, remote alignment, manual horizontal adjustment, unsufficient stiffness	10 (7)	1.3 (2.2)	DL
Spring-8	6 support points, stiff alignment mechanism	19	1.9	
APS	4 Wedge Jacks	9.5 (10.5)	1.5 (9)	DP + shim
Petra III	Similar to Diamond: Girder pedestals, 5 cam systems, beam based girder alignement			
SLS	Girder pedestals, 5 cam systems, beam based girder alignement	15.5		
Soleil	4-points support when operation, 3 Airloc jacks when alignement	**46**	1.0	
Diamond	Girder pedestals, 5 cam systems, remote alignement	16.3	4.6	
SSRF	3 support points, Wedge Jacks and ball bearing, + 3 assistant supports	23	1.3	
Alba	Fixed, 6- point support + vertical fixation	28		
NSLS II	8-points support, fixed, manual alignment	30	1.4	
TPS (proto)	6 cam systems + locking systems	30		

Courtesy: Lin Zhang

EXISTING GIRDERS WORLD WIDE

Most motorized systems = cam driven

f1 = 16Hz except TPS (30Hz)

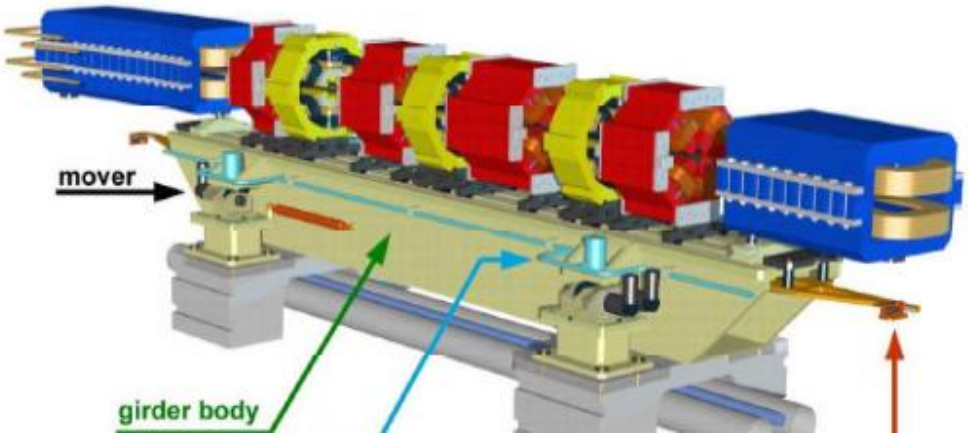

=> Decision to consider an alternative motorised system…

…. Design investigations…

PROPOSED GIRDER CONCEPT FOR ESRF II

4 motorized Z adjustable feet

3 manual horizontal jacks (one X, two Y)

There is one degree of hyperstaticity due to the 4 Z feet, a careful adj of the 4 feet is required (inclinometers).

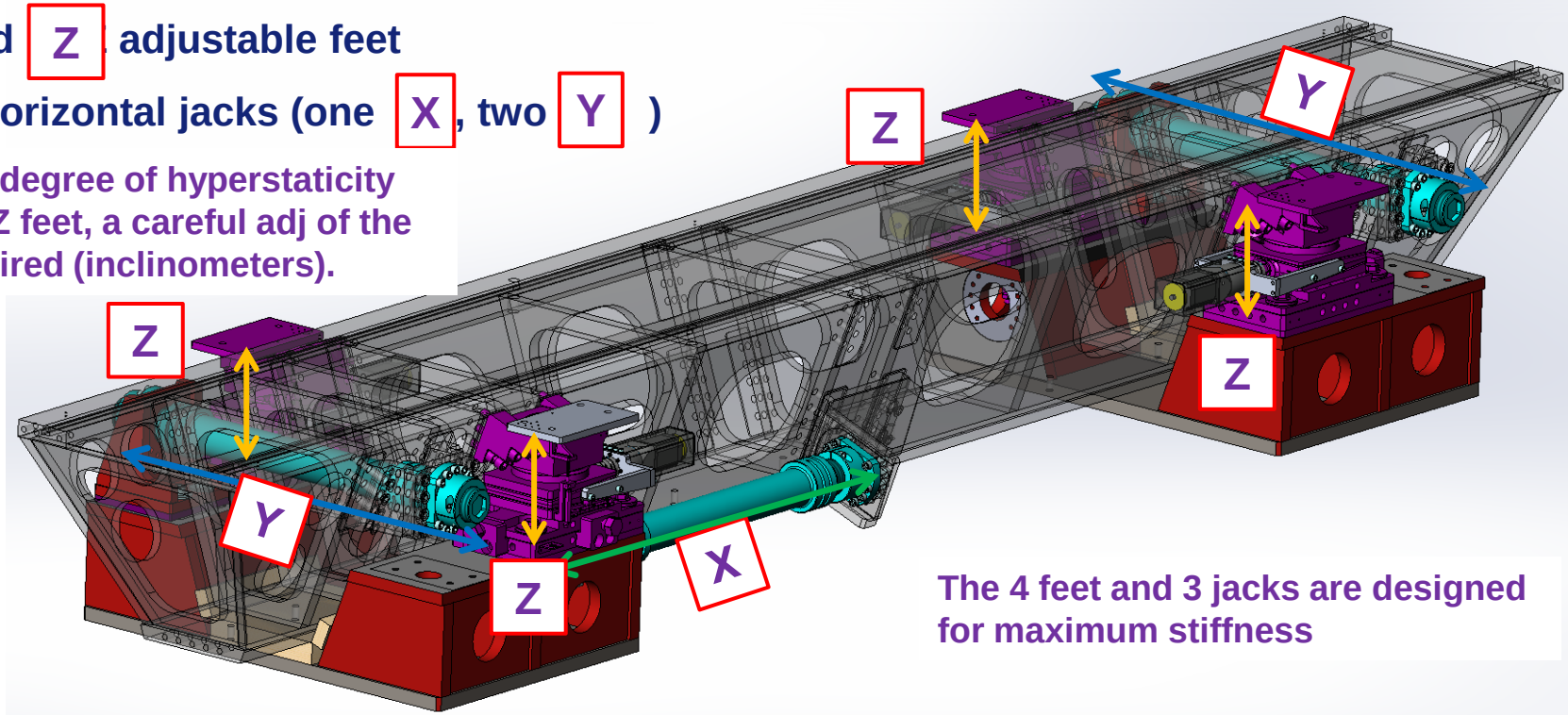

The 4 feet and 3 jacks are designed for maximum stiffness

Courtesy: Filippo Cianciosi

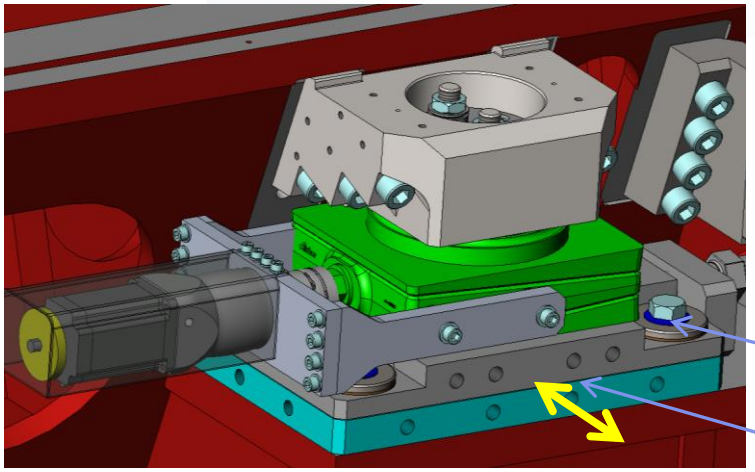

Spring & antifriction washers

Sliding contact for Y adjustment

More details in poster "ESRF Phase II - New storage ring project, Magnet support and Girder design"

L. Eybert, F. Cianciosi

MEDSI 2014- Melbourne

STUDY OF THE GIRDER DYNAMIC BEHAVIOUR

- **Tests to measure Normal (Z) and Transverse (Y) stiffness of the wedge - feet**

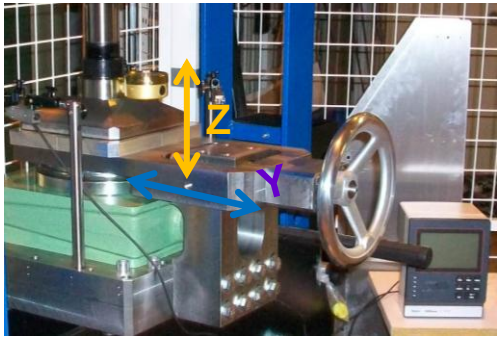

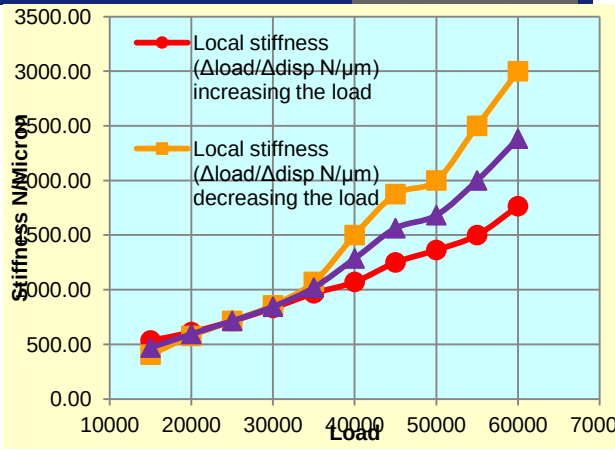

- **FEA model … Calculations … Optimisation…**

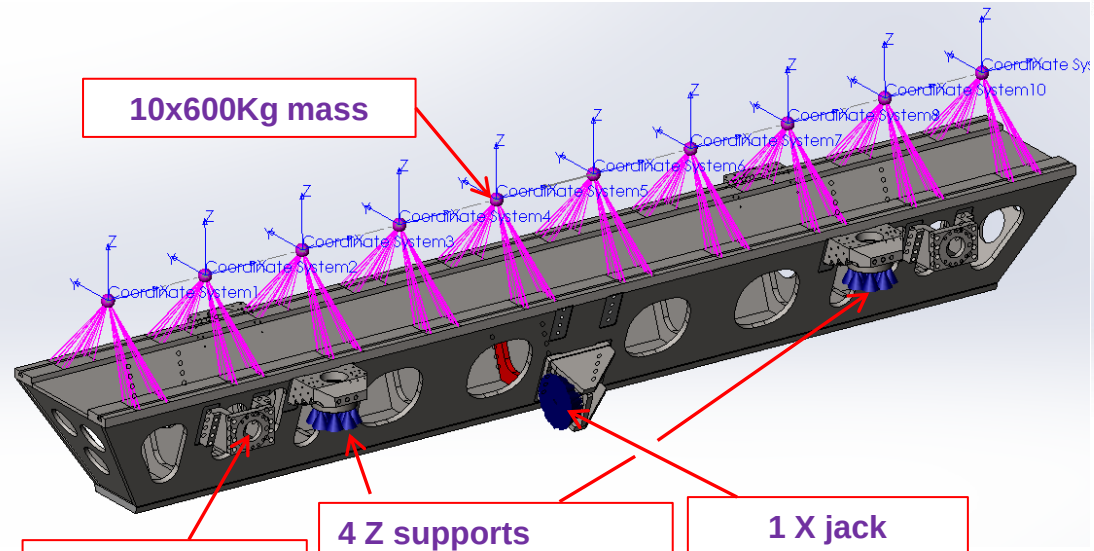

2 Y jacks
227 N/µm in Y

4 Z supports
370 N/µm in X-Y
519 N/µm in Z

1 X jack
270 N/µm in X

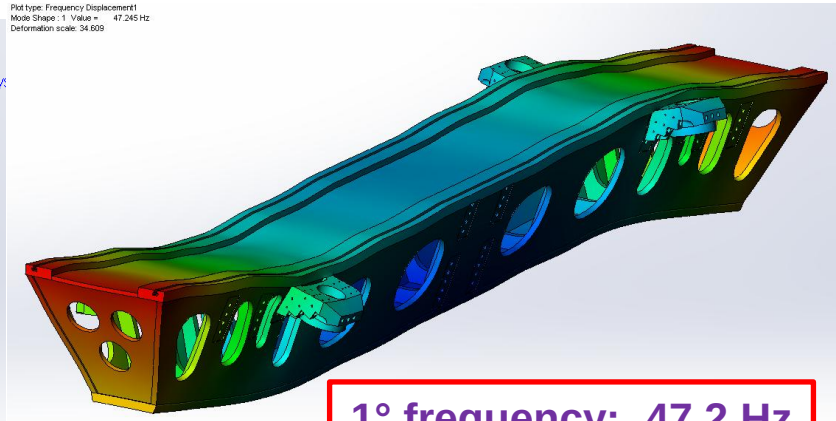

1° frequency: 47.2 Hz
(girder + 6000kg load)

The floor (slab) stiffness is integrated in the model.

Prototype girder launched in Nov. 2014
Tests planned in March 2015

Courtesy: Filippo Cianciosi

VACUUM CHAMBERS FOR THE ESRF II STORAGE RING

- 12 different vacuum chambers (for one cell)
  Very little space for bellows, flanges, valves
  Several chambers are made of different sections welded / brased together

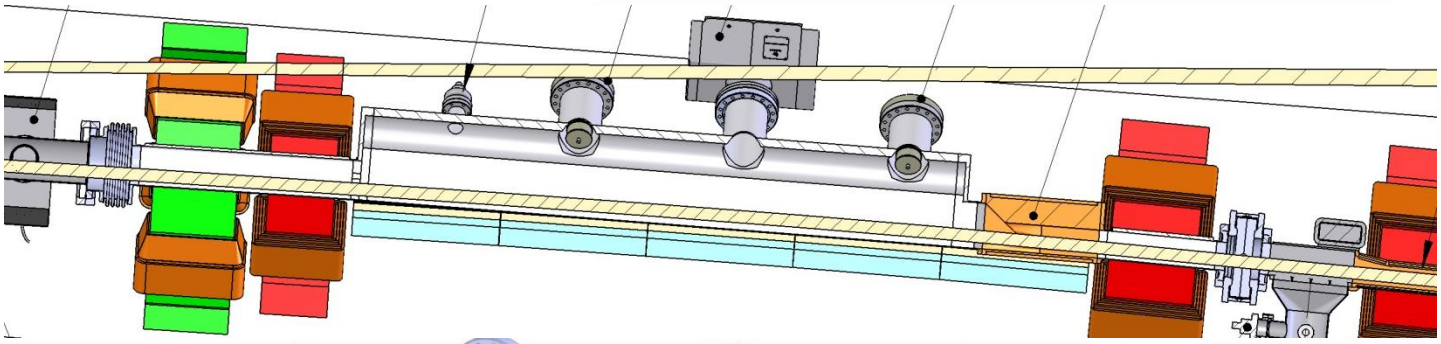

- Very small chamber sections

Loys Goirand, Damien Coulon

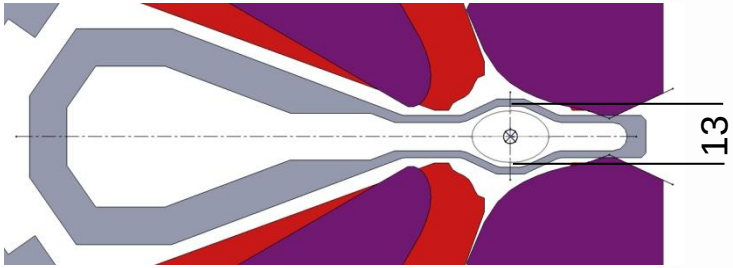

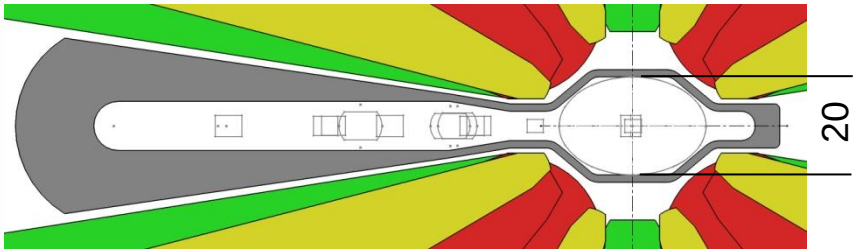

Typically 1.5mm chamber wall, 1mm min. gap chamber ext. wall to magnets poles

=> Tight manufacturing tolerances

VACUUM CHAMBERS FOR THE ESRF II STORAGE RING

- Several chambers will be curved (in the Dipoles-quadrupoles, etc…)

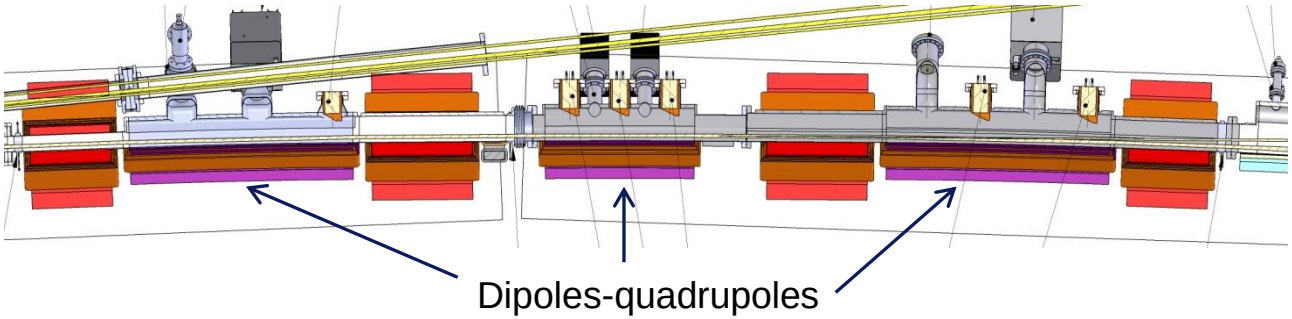

- Pumping mainly by lumped ion and NEG pumps . NEG coating only on a few chambers (difficult on chambers with different sections and on curved chambers)

- Lumped absorbers

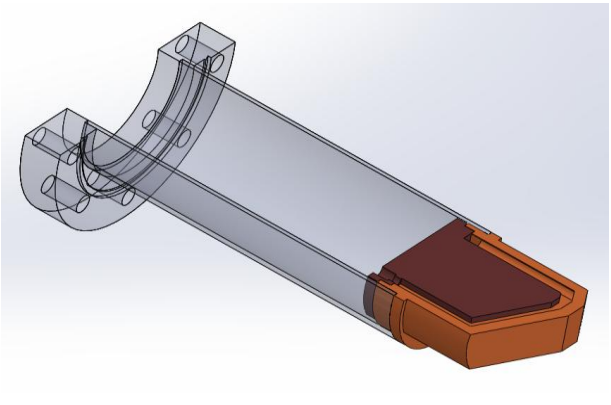

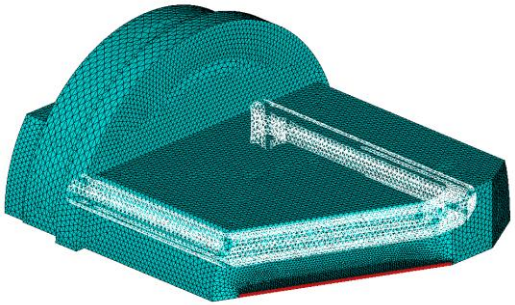

First calculations show that heat induced stresses at 200mA are acceptable.

VACUUM CHAMBERS FOR THE ESRF II STORAGE RING

- Technology:
  Several options under consideration:
  Machined stainless steel + some folded parts / Machined Aluminum
  Copper machined body for some chamber sections

- A prototype of curved stainless steel chamber has been made with satisfactory results:

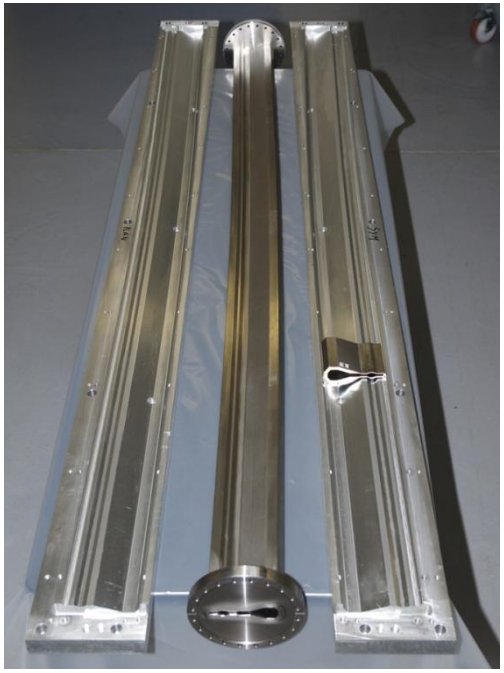

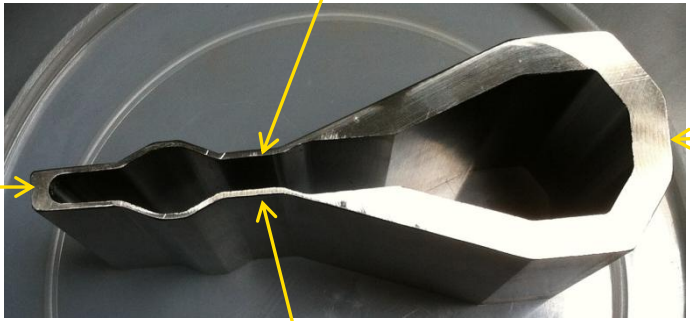

A prototype of Al machined chamber is under fabrication
(INFN collaboration)

CONCLUSION

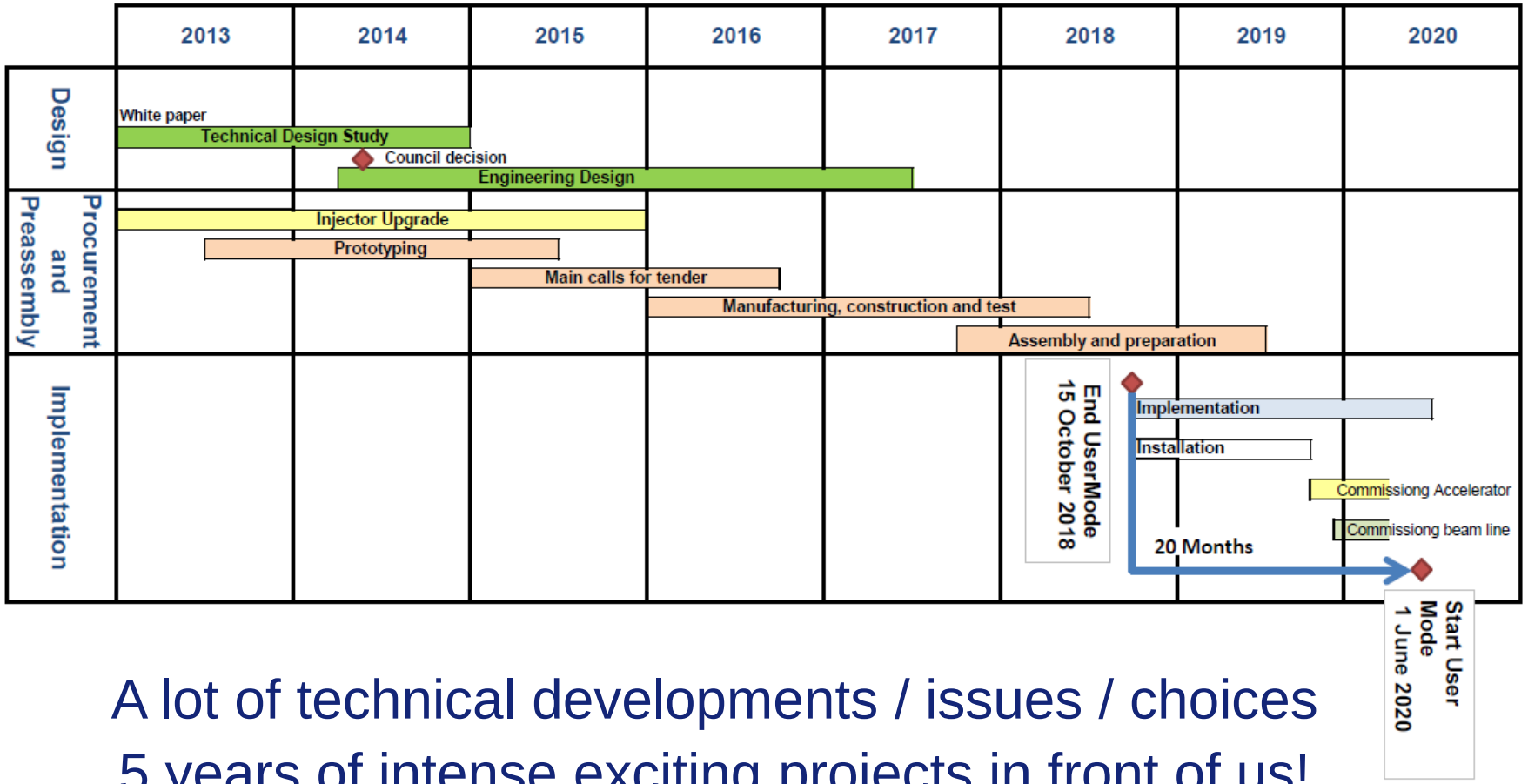

A lot of technical developments / issues / choices

5 years of intense exciting projects in front of us!
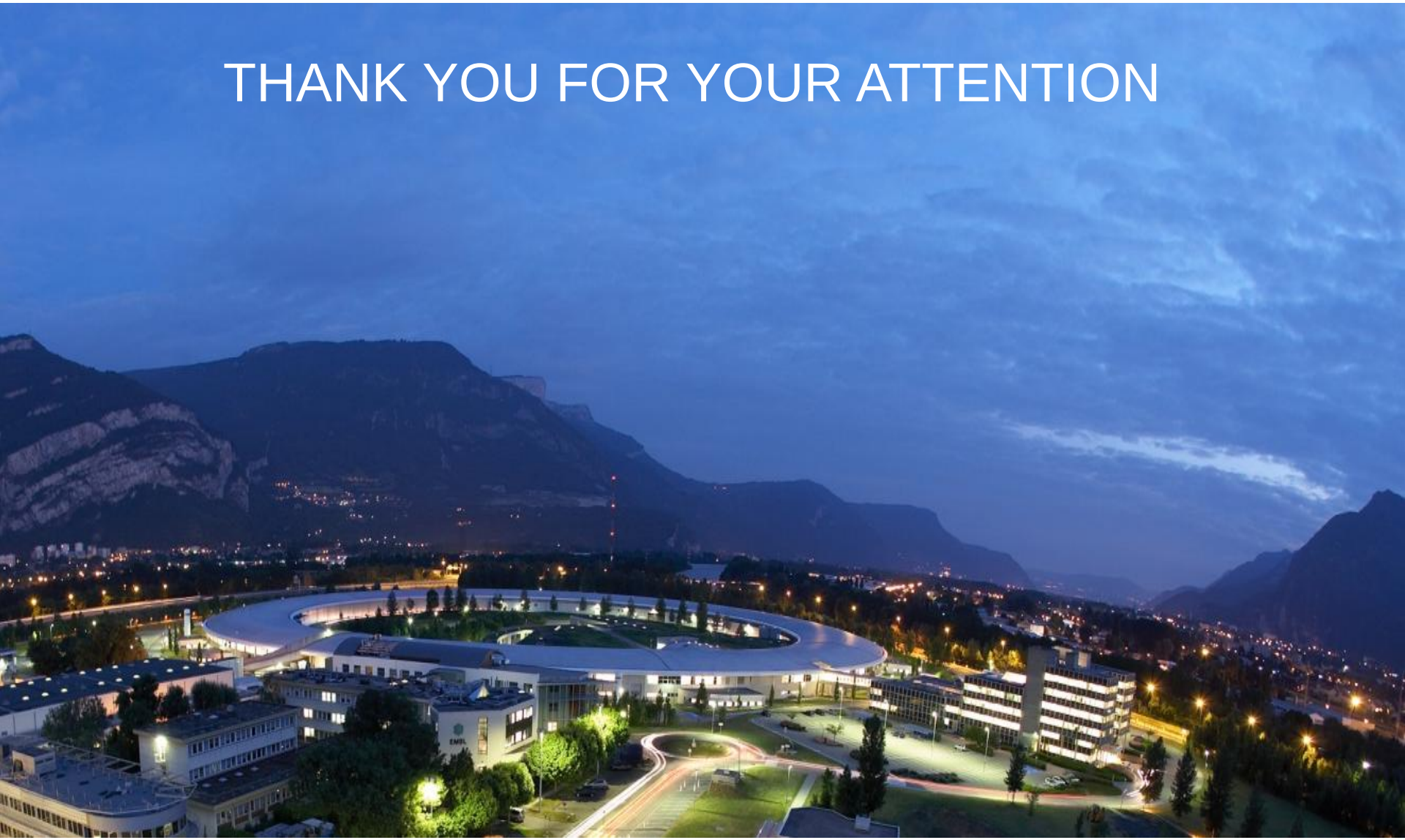
THANK YOU FOR YOUR ATTENTION